CARDEROCK DIVISION, NAVAL SURFACE WARFARE CENTER

TECH transfer UPDATE

Vol. 5, No. 1 February 2000

"We Are Ships"

That's the watchword of the Naval Sea Systems Command (NAVSEA). The Carderock Division is a NAVSEA field activity, working under the Naval Surface Warfare Center (NSWC). We are a critical part of NAVSEA'S technical capabilities. Our mission is to provide:

- Research, development, test and evaluation, Fleet support, and in-service engineering for surface and undersea vehicle hull, mechanical, and electrical (HM&E) systems and propulsors;
- Logistics research and development; and
- Support to the Maritime Administration and and the maritime industry.

For 102 years, the Carderock Division has addressed the full spectrum of applied maritime science and technology, from the theoretical and conceptual beginnings, through design and acquisition, to implementation and follow-on engineering. We address, literally, all of the technical aspects of improving the performance of ships, submarines, and all manner or marine craft, manned and unmanned, and research for the logistics systems that support them. In addition, we are uniquely chartered by Congress to support the nation's maritime industry. This charter provides a strong rationale for serving as the Navy's National Maritime Technology Center.

Laboratory Description

The Carderock Division (CDNSWC) was formed in January 1992 under the Navy's Laboratory Consolidation Plan. This brought about the merger of the David Taylor Research Center (DTRC) and the Naval Ship Systems Engineering Station (NAVSSES). Both DTRC and NAVSSES were established at the turn of the century, and had long-standing reputations for technical and scientific achievements.

The Carderock Division is headquartered at West Bethesda, MD, 12 miles northwest of Washington, DC. This Division has a total of 8 research and test sites located in 9 states around the country.

The former NAVSSES is located on the Delaware River in Philadelphia, PA. In 1994, CDNSWC acquired the Weapons Materials Department at White Oak in Silver Spring, MD from NSWC's Dahlgren Division.

Today, the Carderock Division consists of 3,850 scientists, engineers and support personnel working in more than 40 disciplines ranging from fundamental science to applied/in-service engineering. The Carderock Division is:

- A major technical component of the Naval Sea Systems Command;
- The principal Navy resource, national focal point and international leader in surface and undersea vehicle science, ship systems and related maritime technology;
- A source of innovative technology for other national priorities, such as the environment, energy and transportation;

(Continued on page 2)

INSIDE

TECHNOLOGY ACHIEVEMENTS IN 1999

EXHIBIT SCHEDULE FOR 2000

ASSET TRAINING AVAILABLE

WATERJETS ON DISPLACEMENT HULLS

NAVSEA CARDEROCK Surface Warfare Center Division

We are Ships *(Continued from page 1)*

Technical leadership areas are organized in the following directorates:

- Total Ship Systems Directorate
- Hydromechanics Directorate
- Survivability, Structures and Materials Directorate
- Signatures Directorate
- Machinery Research and Development Directorate
- Machinery Engineering Directorate

For the past 102 years, CDNSWC has preserved and enhanced our nation's presence on and under the seas. CDNSWC has addressed the full spectrum of applied maritime science and technology, from the theoretical and conceptual, through design and acquisition, to implementation and follow-on engineering. With a total FY97 budget of $702.8 M, approximately 58% was used in-house, while the remaining 42% was contracted out. CDNSWC conducts approximately 52% of its efforts on surface ships, 36% of its efforts on submarines and 12% of its efforts on assorted watercraft. The scope of the products and services offered by CDNSWC are as follows:

a. Concepts
b. Research and Development
c. Testing and Evaluation
d. Modeling and Simulation
e. Cost/Benefit Analysis
f. Design and Specifications
g. Hardware
h. Technology Transitions
i. Knowledge / Technology Base
j. Management Support

These products and services allow CDNSWC to serve a dual role for the Navy. First, CDNSWC provides technical leadership by creating and maintaining links between maritime science and technology and the Navy's acquisition programs and current needs of the fleet. Secondly, CDNSWC provides the Navy with long-term stewardship of the knowledge base and specific national assets to ensure that critical maritime technologies are always available to maintain naval superiority for the United States.

Training Available for Ship Design Synthesis Models

Overview

Ship design synthesis models are computer-based design tools used during early stage design to calculate and balance the ship characteristics. The models perform computations for the various naval architectural domains, such as hull form, subdivision, structure, resistance, propulsion, machinery, weight, space and hydrostatics. A variety of methods are used to estimate the characteristics of the total ship, including direct calculation, analysis of historical data, simplified direct calculations calibrated to known data, and direct input from external calculations. Specialized and proven techniques must be used to allow the development of an accurate ship definition with the limited extent of design characteristic data that is available at the earliest stages of design.

CDNSWC has been the primary developer of ship design synthesis models for the U.S. Navy since the early 1980s. The Advanced Surface Ship Evaluation Tool (ASSET) family of ship design synthesis models, developed and maintained by CDNSWC, are used to design naval combatants, auxiliaries, amphibious ships, and aircraft carriers. These models incorporate many specialized capabilities and features which allow the incorporation and assessment of advanced technologies in a design. The technology resident in the ASSET family of design

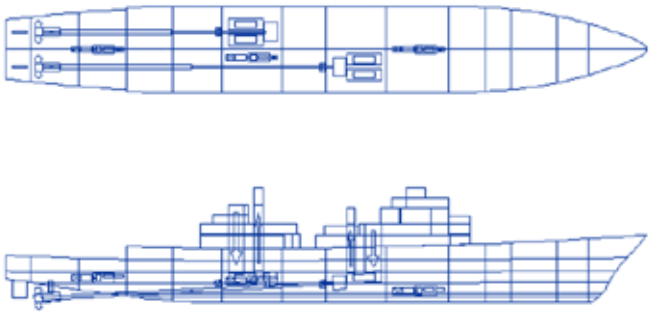

ASSET - Advanced Surface Ship Evaluation Tool (Family of Ship Design Synthesis Programs)

(Continued on page 3)

ASSET Training Available (Continued from page 2)

synthesis models can be easily adapted to commercial ship design applications such as dry bulk carriers, tankers, and roll-on/roll-off ships (RO/ROs).

What is ASSET?

The Advanced Surface Ship Evaluation Tool (ASSET) is a family of interactive computer programs for use in the exploratory and feasibility design phases of naval surface ships. Most specifically ASSET is:

- A family of ship design synthesis computer programs
- A common windows-based user interface and executive program
- Standards software and documentation
- Over 500,000 Lines of Source Code
  - Fortran 90
  - Visual C++/C
  - Visual basic

ASSET is used in the exploratory and feasibility design phases of naval surface ships. The primary purpose of ASSET is to perform the initial prediction of ship physical and performance characteristics based on mission requirements and to do so with sufficient fidelity that the total ship implications of subsystem level design and technology decisions are evident.

Current ASSET Use

ASSET is currently being used in the design of several future U.S. Navy ships. Some of these include the following:

- T-ADCX: The next generation of Navy Replenishment at Sea Auxiliaries
- DD21: The next generation of Navy Surface Combatants
- CVNX: The next generation of Navy Aircraft Carriers
- Midterm sealift project
- Advanced surface machinery project
- Affordability through commonality

ASSET is also being used by several schools for educational purposes. Currently, the following schools utilize ASSET:

- Naval Postgraduate School, Mechanical Engineering Department
- Massachusetts Institute of Technology, Department of Ocean Engineering
- U.S. Coast Guard Academy
- Virginia Polytechnic Institute and State University, Aerospace and Ocean Engineering
- Maine Maritime Academy, Department of Engineering
- U.S. Naval Academy, Hydromechanics Laboratory

ASSET Availability

The ASSET programs are available for use by U.S. Government Agencies and their contractors supporting U.S. Navy and Coast Guard projects. The programs are also available to U.S. educational institutions providing ship design and total ship systems engineering curriculums. For these applications the ASSET programs are distributed free of charge. The programs are delivered on a single CD-ROM.

The ASSET programs may be used for commercial applications (non-U.S. Navy or Coast Guard applications) with the specific approval of the Naval Sea Systems Command (SEA 03D). ASSET use for non-Navy and Coast Guard applications will require contracting with the Carderock Division, NSWC to cover patent license fees and technical support.

ASSET is also available to foreign navies through the Naval Sea Systems Command's Foreign Military Sales Program (PMS 380).

Technical Support

Carderock Division, NSWC provides technical support and periodic ASSET training sessions. These services are available by contract with CD-NSWC. For more information.

E-mail us at asset@dt.navy.mil.

Technology Transfer Achievements in 1999

CRADAs Signed

CRADA #1 – Orcon Corporation

NSWCCA-97-034

Title: Passive Fire Protection

Objective: The objective of this Agreement is to investigate potentially superior fire protection systems for use on Naval vessels and other craft through the use of materials which have demonstrated superior performance in non-marine fire protection applications.

POC: Dr. Eugene Fischer, Code 64, (301) 227-4400

CRADA #2 – Ben Franklin Technology Center (BFTC)/ Bestweld

NSWCCA-98-035

Title: Pipe Fitting Fabrication Process

Objective: The objective of this Agreement is to conduct a review of the pipe fitting fabrication process and identify recommendations for coating/lubrication of fittings for bending operations.

POC: Jim Burns, Code 9113, (215) 897-7926.

CRADA #3 – Purple & Green Research Incorporated

NSWCCA-98-036

Title: Shock Mitigation Seat

The objectives of this CRADA are:

1. To directly compare the prototype shock mitigation seat developed by Purple and Green Research Inc. with a STIDD seat. The STIDD seat is a shock mitigation seat currently being used onboard the MK-V. The prototype seat will be installed onboard a MK-V so comparative testing can be conducted.

2. To analyze acceleration data collected from testing and determine the level of acceleration dampening that occurred on the Purple and Green Research Inc. seat as well as the STIDD seat. This data will be used to directly compare the two seats against each other and determine which seat performs best in the tested environment.

3. To further develop the Purple and Green Research Inc. seat by utilizing the collected and analyzed test data. Make any necessary design changes to the seat and pass the technology on to other applicable craft.

POC: Scott Cummings, Code 2302, (757) 686-7318.

CRADA #4 – Ben Franklin Technology Center (BFTC)/ Philadelphia Tramrail

NSWCCA-98-037

Title: Paint Coatings Blistering Evaluation

Objective: The objective to this Agreement is to conduct a review of the paint coatings applied on the trash compactor units and identify recommendations for coatings in high humidity and salt-laden environments.

POC: Jim Burns, Code 9113, (215) 897-7926.

Patents

Number of Patents Issued: 43

Number of Patent Applications: 40

Number of Invention Disclosures: 69

Number of Patent License Agreements: 1

Number of Patent License Applications Received: 9

Number of Patent License Applications Being Reviewed: 8

Number of Patent License Applications Expected: 2

Other Accomplishments

The following items represent technology transfer activities that have occurred this past year.

1. Number of technology transfer presentations given: 54
2. Number of conference exhibits attended: 21
3. Number of technical papers submitted for publication: 173
4. Number of technical papers submitted at conferences: 101
5. Number of published items – 6 articles published in Tech Notes on technology transfer and patents.
6. Conducted the annual patent portfolio review to determine the maintenance fees for FY99. Ninety-nine (99) patents were assessed and fees totaling $60,000 were authorized for payment.
7. Review of CDNSWC items for public release. The primary purpose of this review is to ensure that CDNSWC intellectual property is protected and provides the TTO with an overview of current activities being conducted by CDNSWC technical staff.
8. Sponsored the "Technology Outreach and Entrepreneurship" seminar for members of the CDNSWC staff.

(Continued on page 5)

Technology Transfer Info

(Continued from page 4)

9. Maryland Materials Alliance – Participated with the Maryland Department of Business and Economic Development (MD DBED) in proposing support to Maryland material technology companies.

10. Participated in the Minority Small Business Incubation Program with Howard University and the United States Marine Corps.

11. Four Technology Transfer Update newsletters were published.

12. Presented 5 training seminars on "Intellectual Property and Technology Transfer" in Norfolk, Carderock and Philadelphia. A total of 80 persons were trained.

13. Completed major revision on the Web Site that included new information to the patent area.

14. Participated in monthly Invention Evaluation Board meetings.

15. Prepared and submitted one nomination to the FLC for Technology Transfer Excellence Awards. The nomination was selected.

16. Prepared and submitted to ONR the required annual report of CDNSWC costs associated with technology transfer.

17. A special advertisement appeared in "Yachting Magazine" that discussed partnership activities between Browne & Sharpe, sponsor of the New York Yacht Club/Young America Challenge for the America's Cup, and CDNSWC.

18. Assessments and Licensing Program activities:
NTTC Assessments: 15
Foresight Assessments: 2
University of Baltimore Assessments: 6
Carderock (NRL Approach): 2
Geo Centers

19. Outreach through the Technical Assistance CRADAs:
Ben Franklin Technology Center (BFTC)/ Philadelphia Tramrail
Ben Franklin Technology Center (BFTC)/ Bestweld

20. The DoD Small Business Innovation Research (SBIR) program is a three phase program which funds early-stage R&D at small technology companies. These projects serve a DoD need and have the potential to commercialization in the private sector. The first two phases work to show the feasibility of the concept and whether a working prototype can

(Continued on page 7)

Exhibit Schedule for 2000

Come Visit Us!

Visit the Carderock Division Exhibit on the following dates in 2000. For more information on these conferences and the exhibit program, please call Geraldine Yarnall, Outreach Manager at (301) 227-1439.

1. Navy League's Sea-Air-Space Exposition
Washington Marriott Wardman Park Hotel
Washington, D.C.
18-20 Apr 2000 *www.bilexpo.com*

5. Offshore Technology Conference
Astrodome, Houston, TX
1-4 May 2000 *www.otcnet.org*

6. American Society of Naval Engineers (ASNE Day '00)
Crystal City Hyatt Hotel Arlington, Va.
18-19 May 2000 *www.navalengineers.org*

7. Submarine Technology Symposium
Applied Physics Lab Laurel, Md
16-18 May 2000 *www.jhuapl.eud/sts*

8. Multi-Agency Craft Conference (MACC)
Rockwell HallLittle Creek, VA
13-15 Jun 2000
www.boats.cet.navy.mil/MACCY2Web

9. 2000 Ship Production Symposium & Expo
Williamsburg Lodge Williamsburg, Va.
23-25 Aug 2000
www.sname.org/sections/hampton_roads/ship_production.htm

10. Oceans '00 MTS/IEEE
Rhode Island Convention Center
Providence, Rhode Island
11-14 Sep 2000 *www.OCEANS2000.com*

11. Marine Corps League
Quantico Marine Corps BasE Quantico, Va.
19-21 Sep 2000 *www.bilexpo.com*

12. International Maritime Exposition (SNAME)
Vancouver Convention & Exhibition Centre
Vancouver Canada
5-6 Oct 2000 *www.sname.org*

13. Shock & Vibration Symposium
Sheraton National Hotel Arlington, Va
23-27 Oct 2000 *www.saviac.xservices.com/71st1.htm*

14. Work Boat Show
Ernest N. Morial Convention Center,
New Orleans, La
6-8 Dec 2000 *www.workboatshow.com*

Waterjet Patent License Available

Waterjets on Displacement Hulls

Waterjets

A waterjet's distinguishing feature is that it is internal rather than external–relative to the hull. Waterjets, however, are inherently less efficient than open propellers, due in part to the relatively tortuous flow path and associated losses. Also, the mass flow rate must be kept lower than the optimum flow rate so as not to deplete the useful volume of the ship. Despite this, waterjets were found to have lower power requirements than open propellers for some applications. A waterjet is often the ducted propulsor of choice for surface craft in the 30-50 knot range. Moderate size ships, such as ferryboats, operating in a planning mode at speed above 30 knots are powered almost exclusively by waterjets.

The typical waterjet achieves stability, control, steering and backing simply by swiveling the discharge jet. This is a form of vectored thrust, which is more effective than conventional methods for steering, backing and stability control and eliminates the control surfaces, the rudder and associated drag. In the planning mode, the rudder and control surfaces contribute significantly to the total drag. Eliminating the rudder and control surfaces counters the reduced waterjet efficiency.

Waterjets and Displacement Hulls

Recently waterjets, either the Vertical Motor Propulsor (VMP) or the conventional unit, have been proposed for use on displacement hulls. (The VMP has nearly a vertical axis of rotation as compared to the nearly horizontal axis of a more conventional unit.) In such a case the elimination of the rudders and control surfaces is not sufficient for countering the lower efficiency of the waterjet.

However, there is another point to consider: adding a propulsor to any hull causes interaction that may increase or decrease resistance. External propulsors invariably result in increased resistance. The increase in drag is usually subtracted from the open-water thrust of the propeller and is commonly referred to as the thrust deduction.

However, internal propulsor–waterjets can, and usually do, interact with the ship to produce a decrease in the drag of the ship. The decrease in the drag may be maximized by integrating the design of the aft end of the ship and the propulsor. Such a design may look considerably different than currently existing designs. The pertinent question is whether or not the combination of eliminated rudders and control surfaces, as well as a favorable hull interaction, is sufficient to compensate for lower waterjet efficiency.

Several years ago, an effort began to determine if waterjets are practical propulsors for larger ships. The Propulsion and Fluid Systems Department of the Hydrodynamic Directorate, under the guidance of Dr. Frank Peterson and Dr. Charles Dai, developed a variety of vertical, or near vertical, inlet geometries and an integrated aft end design with near vertical inlets for a destroyer hull form. The integrated design used the best computer tools available today.

Waterjet Testing on Hulls

To test the waterjets, an existing destroyer model was modified, equipped with a generic pump and an extensive series of tests performed in the Shallow Water Basin. The power required to drive the full-scale ship was inferred from these results using an estimated pump efficiency and a correction for the model scale to full-scale hull boundary layer thickness effect.

As noted, the waterjet-equipped hull required less power at 12 and 28 knots and about the same power at 20 knots as the destroyer hull without the waterjet. While a single test cannot be considered conclusive, the results are certainly encouraging. Even though the inlet and discharge were characteristic of the VMP, and these results

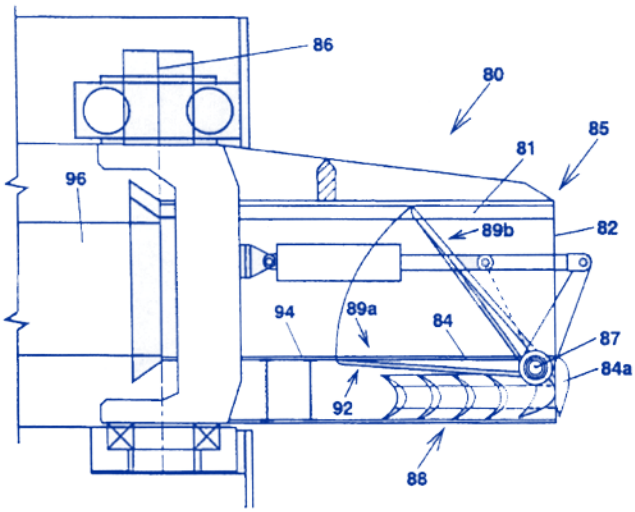

Compact waterjet propulsion system for a Marine vehicle.

(Continued on page 7)

Waterjets on Displacement Hulls (Continued from page 6)

should be applicable to all types of waterjets. Consequently, it does appear as though waterjets are a viable option for propelling large, displacement-type ships.

No cavitation tests were included in these experiments. However, one of the unique characteristics of waterjets is that they can, at least conceptually, be designed to be cavitation free at almost any speed. The inlet flow can be diffused, by sufficiently increasing its pressure to prevent cavitation. However, there are limits to this method of cavitation prevention and it can lead to excessively large units and degraded off-design performance.

Three patents cover this invention. United States Patent 5,439,402, *Design of an Integrated Inlet Duct for Efficient Fluid Transmission*; United States Patent 5,476,401, *Compact Water Jet Propulsion System for a Marine Vehicle*; and United States Patent 5,591,057, *Hull Supported Steering and Reversing Gear for Large Waterjets*. This invention is available for licensing. For further information contact Henry Strunk at Carderock Division NSWC, Code 0117, West Bethesda, MD 20817. Phone (301) 227-1529. E-mail strunkh@nswccd.navy.mil

Integrated vertical inlet (waterjet).

Other Technology Achievements (Continued from page 5)

be created. The third phase is aimed at commercializing technology.

CDNSWC is a large player in the SBIR program. Currently, CDNSWC has 15 Phase II contracts in place representing $10 million over their life. The 60 Phase I contracts in FY 99 represent a $4.5 million investment. In FY 00, CDNSWC will award 15 new Phase II contracts and 60 new Phase I contracts. Almost $600k was awarded to CDNSWC to manage the program in FY 99. CDNSWC is also participating in two special SBIR initiatives funded directly by the Office of the Secretary of Defense. These support the needs and requirements of the DD-21 and CVNX programs.

The CDNSWC SBIR office maintains an ongoing call for topics for upcoming SBIR RFPs. SCNSWC engineers and scientists get involved by proposing these topics. A key element of having a topic selected is sponsorship and connectivity to a funded program. Transition capability is another important issue to consider and should be addressed by gaining the support of a SYSCOM sponsor at the beginning of the process. The SBIR office helps develop a topic, obtains sponsor support and makes it a part of the RFP process. Proposed SBIR topics should adhere to the following criteria:

- Topics will solicit R&D and NOT procurement.
- Topics will fall within one of DoD's key technology areas.
- Topics will include examples of possible Phase II dual-use applications.
- Topics will allow the performing company signifi cant flexibility.

CARDEROCK DIVISION
NAVAL SURFACE WARFARE CENTER
NSWC

http://www.dt.navy.mil

1999-Year In Review

(SEE ANY OF THE FOLLOWING ISSUES.)

April Issue

- Combined Bulbous Bow and Sonar Dome for a Vessel
- Evaluating and Marketing Our Patents
- Patent Licensing and Technology Transfer at Carderock
- Patent License Application Process
- Recent Patent Applications with High Commercial Potential
- Selected Recent Patents with Commercial Potential
- Technology Partnerships - Is the Carderock Division a Part of Your Business Plan?

July Issue

- Federal Laboratory Consortium Award Winners for Technology Transfer
- New Patents with Commercial Potential
- Small Business Innovation Research
- Working for Private Parties

October Issue

- Special Issue on Cooperative Research and Development Agreements (CRADAs)

February 2000, Volume 5, Number 1
Tech Transfer Update, (ISSN 1084-6557) is the publication of the Office of Research and Technology Applications, Code 0117.
Tech Transfer Update is published in accordance with NAVSO-P35. Articles appearing in the *Tech Transfer Update* may be summaries and news briefs from CDNSWC's publications. Manuscripts submitted for publication, correspondence concerning prospective articles, and changes of address should be directed to Carderock Division, Naval Surface Warfare Center, Office of Research & Technology Applications, Code 0117, 9500 MacArthur Blvd., West Bethesda, Maryland 20817-5700.

CAPT John H. Preisel, USN, Commander

Richard E. Metrey, Director

Dick L. Bloomquist,
Director, Technology Transfer
(301)227-4299
bloomquistdl@nswccd.navy.mil
Fax (301)227-2138

Henry Strunk
Patent Licensing Manager
(301)227-1529
strunkh@nswccd.navy.mil

Geraldine Yarnall, Outreach
Manager, and Editor
(301)227-1439
yarnallgr@nswccd.navy.mil

James E. Wood, CRADA
and SBIR Manager
(301)227-2690
woodje@nswccd.navy.mil

John Forrest
Intellectual Property Counsel
forrestjl@nswccd.navy.mil
(301)227-1834

Yvonne Byrd Watson
Production Editor
(301)227-1146

Approved for Public Release;
distribution is unlimited.

TECH transfer UPDATE
DEPARTMENT OF THE NAVY
NAVAL SURFACE WARFARE CENTER, CARDEROCK DIVISION
9500 MACARTHUR BLVD.
OFFICE OF RESEARCH AND TECHNOLOGY APPLICATIONS, CODE 0117
WEST BETHESDA, MARYLAND 20817-5700