Distribution Statement A: Approved for public release; Distribution unlimited.

ZONE	REV.	REVISIONS DESCRIPTION	DATE	APPROVED
	A	Initial Issue	–	–

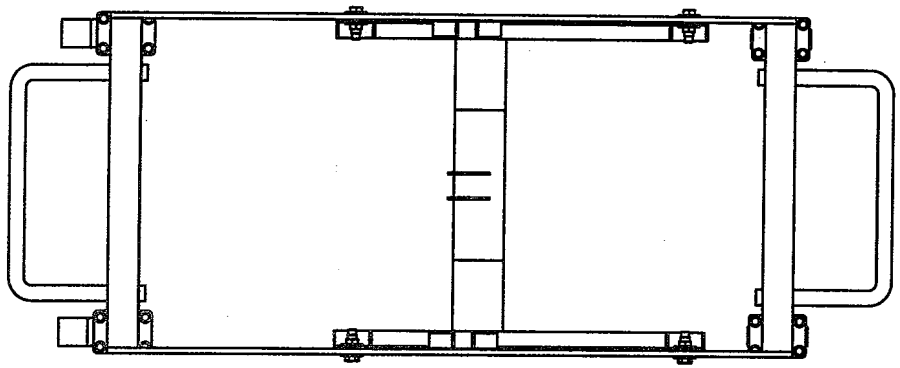

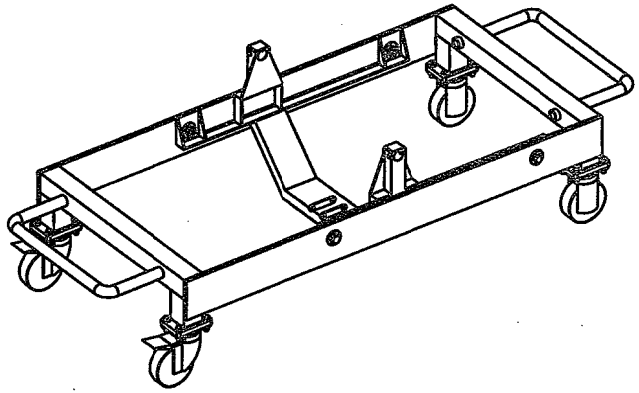

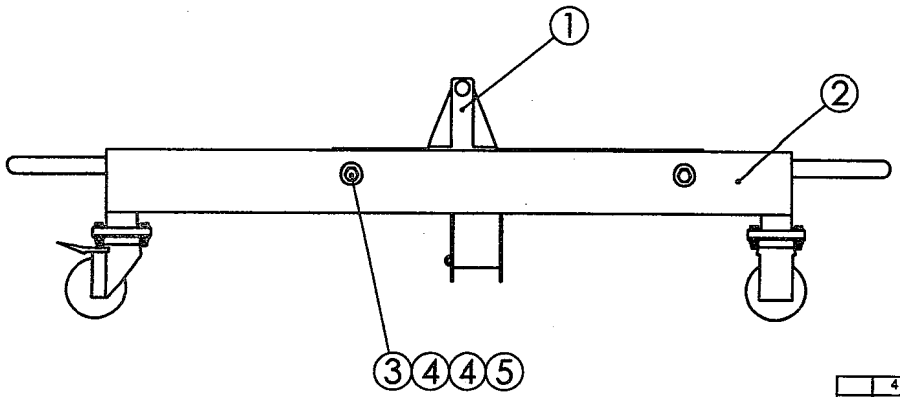

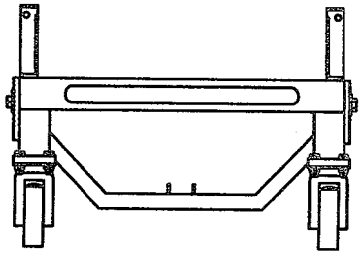

QTY REQD	FSCM NO.	PART OR IDENTIFYING NO.	NOMENCLATURE OR DESCRIPTION	MATERIAL SPECIFICATION	ZONE	ITEM NO.
4	56878	50RH-813	1/2"-13 Flex Top Lock Nut	CRES		5
8	96906	MS15795-819	1/2" Bolt Flat Washer	CRES		4
4	96906	MS35307-414	1/2"-13 x 1.75" Long Hex Head Cap Screw	CRES		3
1	89256	7661800	250-KS4 Engine Cradle: Outer Engine Mounting Assembly			2
1	89256	7661612	250-KS4 Engine Cradle: Inner Engine Mounting Bracket			1
-1						

PARTS LIST

ITEM NO. -- QTY REQD 1

UNLESS OTHERWISE SPECIFIED DIMENSIONS ARE IN INCHES TOLERANCES ARE:
DECIMALS ±XXX ANGLES ±XXX

MATERIAL --

FINISH --

DO NOT SCALE DRAWING

CAD GENERATED DRAWING, DO NOT MANUALLY UPDATE

	NAME	DATE
DRAWN	David Zipkin	2004-10-20
CHECKED	--	--
ENG APPR.	--	--

COMMENTS:

NAVSEA - PHILADELPHIA
1569 CONSTITUTION AVE.
PHILADELPHIA, PA 19112

Third Angle Projection

PART NAME:
250-KS4 Engine Cradle: Assembly

SIZE	CAGE	WGN	NAVSEA DWG. NO.	REV.
A	89256	803	7613153	A

SCALE 1:12 | CAD FILE: lifting bracket assembly | SHEET 1 OF 1

Distribution Statement A: Approved for public release; Distribution unlimited.

ZONE	REV.	REVISIONS DESCRIPTION	DATE	APPROVED
	A	Initial Issue	--	--

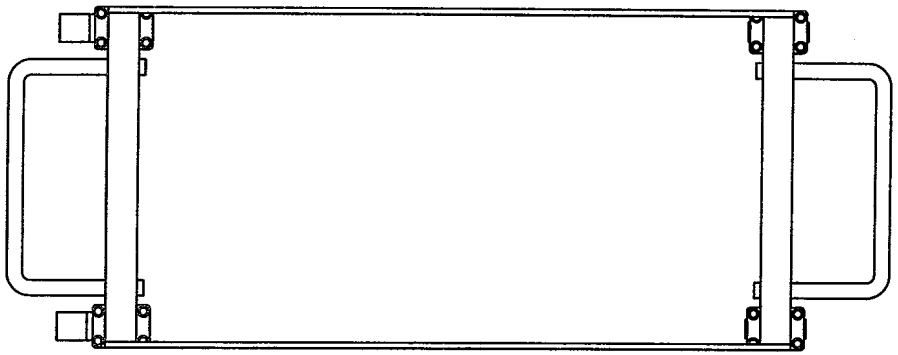

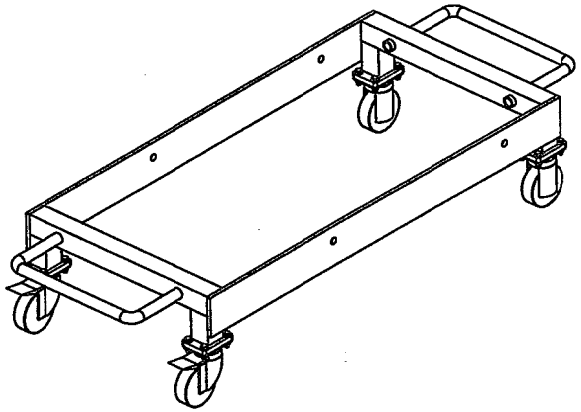

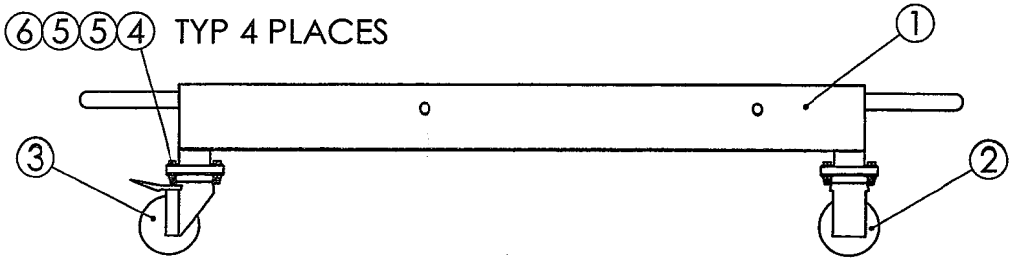

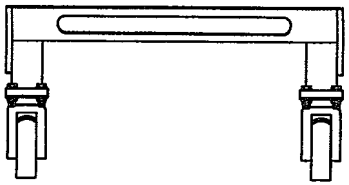

Note:
1. Torque values for bolts:
   1.1 All 5/16" diameter bolts shall be torqued to 100 in-lbs

QTY REQD	FSCM NO.	PART OR IDENTIFYING NO.	NOMENCLATURE OR DESCRIPTION	MATERIAL SPECIFICATION	ZONE	ITEM NO.
16	56878	50FH-518	5/16"-18 Flex Top Lock Nut	CRES		6
32	96906	MS15795-812	5/16" Bolt Flat Washer	CRES		5
16	96906	MS35307-336	5/16"-18 x 1.25" Long Hex Head Cap Screw	CRES		4
2	21672	367H32C100BZPF	Castor, Swivel, Brake			3
2	21672	364A32C100BZPF	Castor, Fixed			2
1	89256	7661801	250-KS4 Engine Cradle: Outer Engine Mounting Sub-Assembly			1
-1						

PARTS LIST

ITEM NO. -- QTY REQD 1

UNLESS OTHERWISE SPECIFIED DIMENSIONS ARE IN INCHES TOLERANCES ARE:
DECIMALS ±XXX ANGLES ±XXX

MATERIAL --

FINISH --

DO NOT SCALE DRAWING

CAD GENERATED DRAWING, DO NOT MANUALLY UPDATE

	NAME	DATE
DRAWN	David Zipkin	2004-10-20
CHECKED	--	--
ENG APPR.	--	--

COMMENTS:

NAVSEA - PHILADELPHIA
1569 CONSTITUTION AVE.
PHILADELPHIA, PA 19112

Third Angle Projection

PART NAME: 250-KS4 Engine Cradle: Outer Engine Mounting Assembly

SIZE	CAGE	WGN	NAVSEA DWG. NO.	REV.
A	89256	803	7661800	A

SCALE 1:12 | CAD FILE: outer cradle | SHEET 1 OF 1

Distribution Statement A: Approved for public release; Distribution unlimited.

ZONE	REV.	REVISIONS DESCRIPTION	DATE	APPROVED
	A	Inital Issue	–	–

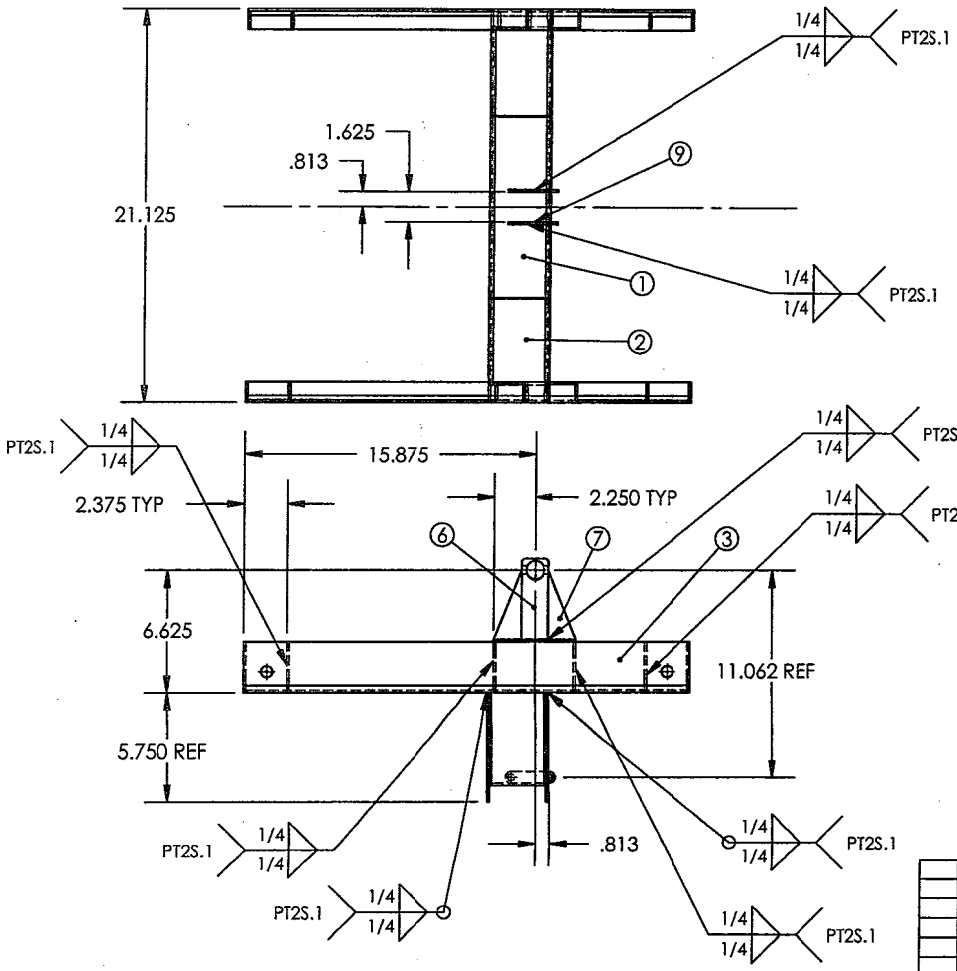

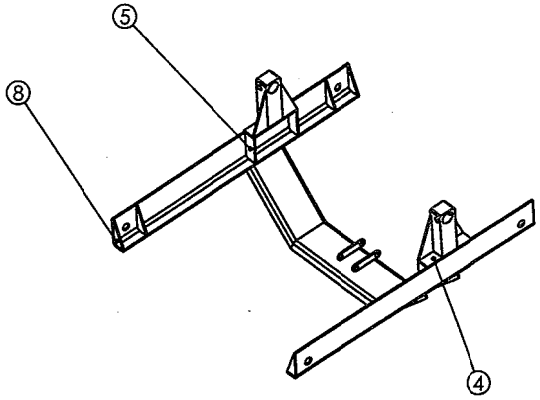

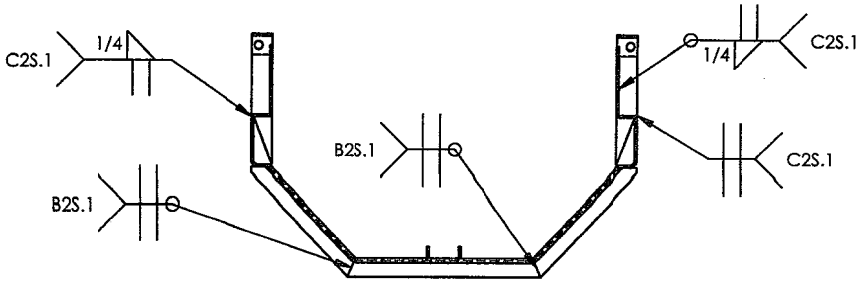

Note:
1. Break all sharp edges/Remove all burrs
2. Welding shall conform to NAVSEA S9074-AR-GIB-010/278, class M-2, category C, process GMAW or GTAW, weld and inspection symbols used herein conform to ANSI/AWS A2.4
3. Surface Preparation: Light commercial abrasive blast (SSPC-SP10)
4. Painting
   4.1 Painting
      4.1.1 Apply one coat of Epoxy Polyamide Primer per Mil-DTL-24441/20A, Navy standard formula no. 150, type III, DFT .002 MIN
      4.1.2 Intermediate and top coat haze gray epoxy polyamide per MIL-DTL-24441/21A, formula no. 151, type III, DFT .002 MIN each coat
   4.2 Powder coat per Mil-C-24712A, epoxy polyester hybrid (type II), interior wet spaces (class II), formula semigloss gray #37 (26307) or equivilent color, total DFT of panel 4 mils
   4.3 Apply paint in strict conformity to manufacturer's data sheets and instructions, including surface and material temperatures

QTY REQD	FSCM NO.	PART OR IDENTIFYING NO.	NOMENCLATURE OR DESCRIPTION	MATERIAL SPECIFICATION	ZONE	ITEM NO.
2		7661612-9	Plate Stock, 0.125" Thick	ASTM A36		9
8		7661612-8	Plate Stock, 0.125" Thick	ASTM A36		8
4		7661612-7	Plate Stock, 0.125" Thick	ASTM A36		7
2		7661612-6	Bar Stock, Rectangular	ASTM A36		6
4		7661612-5	Plate Stock, 0.125" Thick	ASTM A36		5
2		7661612-4	Plate Stock, 0.125" Thick	ASTM A36		4
3		7661612-3	Plate Stock, 0.125" Thick	ASTM A36		3
2		7661612-2	Plate Stock, 0.125" Thick	ASTM A36		2
1		7661612-1	Plate Stock, 0.125" Thick	ASTM A36		1
-1						

PARTS LIST

ITEM NO. --
QTY REQD 1

UNLESS OTHERWISE SPECIFIED DIMENSIONS ARE IN INCHES TOLERANCES ARE:
DECIMALS ±0.010 ANGLES ±0.10

MATERIAL --

FINISH --

DO NOT SCALE DRAWING

CAD GENERATED DRAWING, DO NOT MANUALLY UPDATE

	NAME	DATE
DRAWN	David Zipkin	2004-10-20
CHECKED	–	–
ENG APPR.	–	–

COMMENTS:

NAVSEA - PHILADELPHIA
1569 CONSTITUTION AVE.
PHILADELPHIA, PA 19112

Third Angle Projection

PART NAME:
250-KS4 ENGINE CRADLE: INNER ENGINE MOUNTING BRACKET

SIZE	CAGE	WGN	NAVSEA DWG. NO.	REV.
A	89256	803	7661612	A

SCALE 1:10 | CAD FILE: rimms lifting bracket | SHEET 1 OF 10

ZONE	REV.	REVISIONS DESCRIPTION	DATE	APPROVED
	A	Initial Issue	--	--

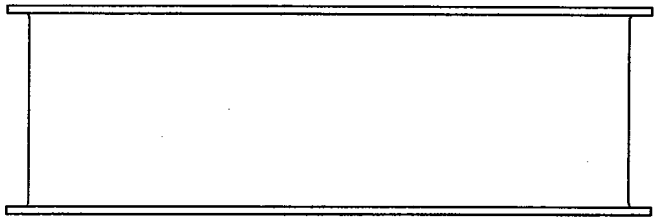

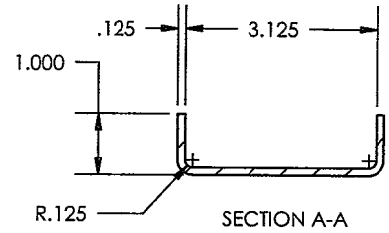

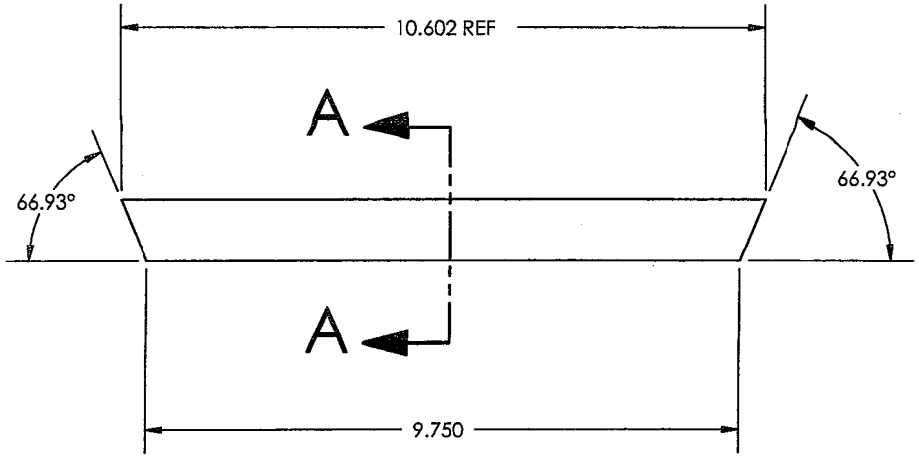

7661612-1

ITEM NO.	--	QTY REQD	1

UNLESS OTHERWISE SPECIFIED DIMENSIONS ARE IN INCHES TOLERANCES ARE:

DECIMALS	ANGLES
±0.010	±0.10

MATERIAL --

FINISH --

DO NOT SCALE DRAWING

CAD GENERATED DRAWING, DO NOT MANUALLY UPDATE

	NAME	DATE
DRAWN	David Zipkin	2004-10-20
CHECKED	--	--
ENG APPR.	--	--

COMMENTS:

NAVSEA - PHILADELPHIA
1569 CONSTITUTION AVE.
PHILADELPHIA, PA 19112

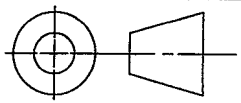

Third Angle Projection

PART NAME:
250-KS4 ENGINE CRADLE: INNER ENGINE MOUNTING BRACKET

SIZE	CAGE	WGN	NAVSEA DWG. NO.	REV.
A	89256	803	7661612	A

SCALE 1:3 | CAD FILE: rimms lifting bracket | SHEET 2 OF 10

ZONE	REV.	REVISIONS DESCRIPTION	DATE	APPROVED
	A	Initial Issue	--	--

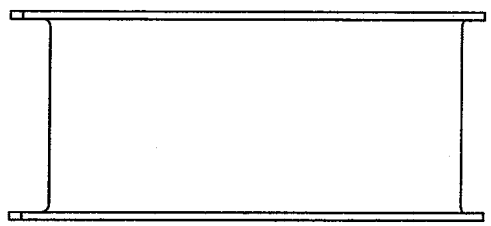

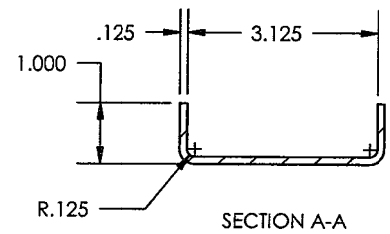

SECTION A-A

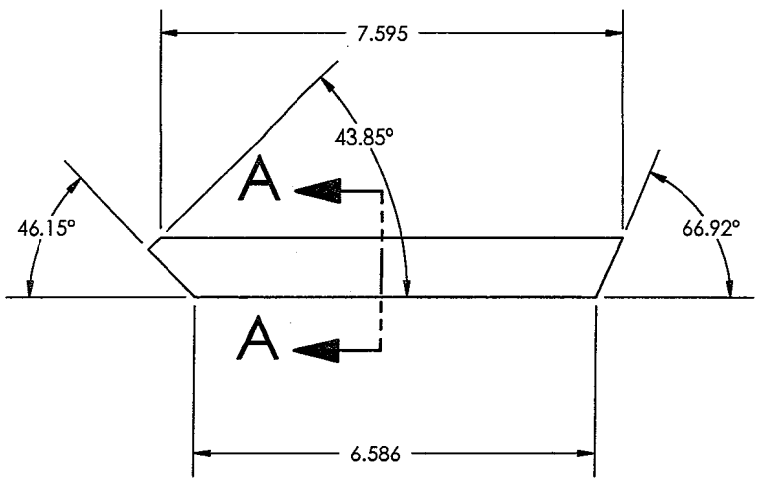

7661612-2

ITEM NO.	--	QTY REQD	1

UNLESS OTHERWISE SPECIFIED DIMENSIONS ARE IN INCHES TOLERANCES ARE:

DECIMALS	ANGLES
±0.010	±0.01

MATERIAL --

FINISH --

DO NOT SCALE DRAWING

CAD GENERATED DRAWING. DO NOT MANUALLY UPDATE

	NAME	DATE
DRAWN	David Zipkin	2004-10-20
CHECKED	--	--
ENG APPR.	--	--

COMMENTS:

NAVSEA - PHILADELPHIA
1569 CONSTITUTION AVE.
PHILADELPHIA, PA 19112

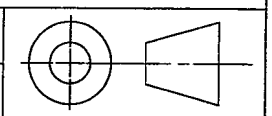

Third Angle Projection

PART NAME:
250-KS4 ENGINE CRADLE: INNER ENGINE MOUNTING BRACKET

SIZE	CAGE	WGN	NAVSEA DWG. NO.	REV.
A	89256	803	7661612	A

SCALE 1:3 | CAD FILE: rimms lifting bracket | SHEET 3 OF 10

REVISIONS				
ZONE	REV.	DESCRIPTION	DATE	APPROVED
	A	Initial Issue	--	--

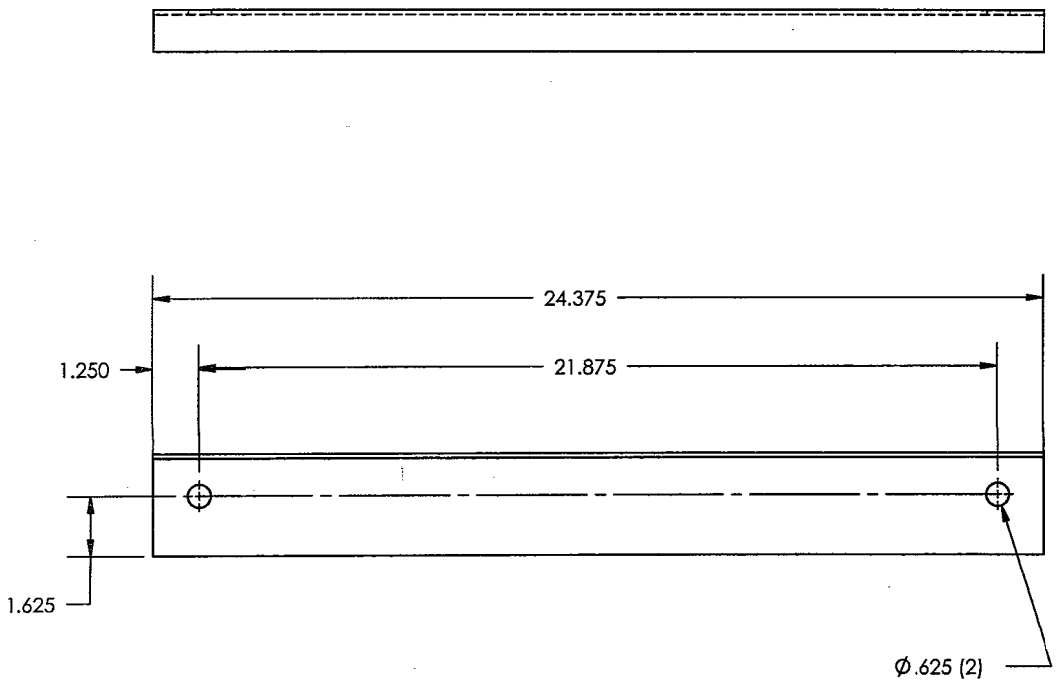

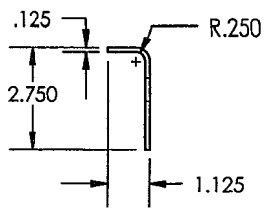

7661612-3

ITEM NO.	--	QTY REQD	1

UNLESS OTHERWISE SPECIFIED DIMENSIONS ARE IN INCHES TOLERANCES ARE:

DECIMALS	ANGLES
±0.010	±0.01

MATERIAL: --

FINISH: --

DO NOT SCALE DRAWING

CAD GENERATED DRAWING, DO NOT MANUALLY UPDATE

	NAME	DATE
DRAWN	David Zipkin	2004-10-20
CHECKED	--	--
ENG APPR.	--	--

COMMENTS:

NAVSEA - PHILADELPHIA
1569 CONSTITUTION AVE.
PHILADELPHIA, PA 19112

Third Angle Projection

PART NAME:
250-KS4 ENGINE CRADLE: INNER ENGINE MOUNTING BRACKET

SIZE	CAGE	WGN	NAVSEA DWG. NO.	REV.
A	89256	803	7661612	A

SCALE 1:5 | CAD FILE: rimms lifting bracket | SHEET 4 OF 10

ZONE	REV.	REVISIONS DESCRIPTION	DATE	APPROVED
	A	Initial issue	--	--

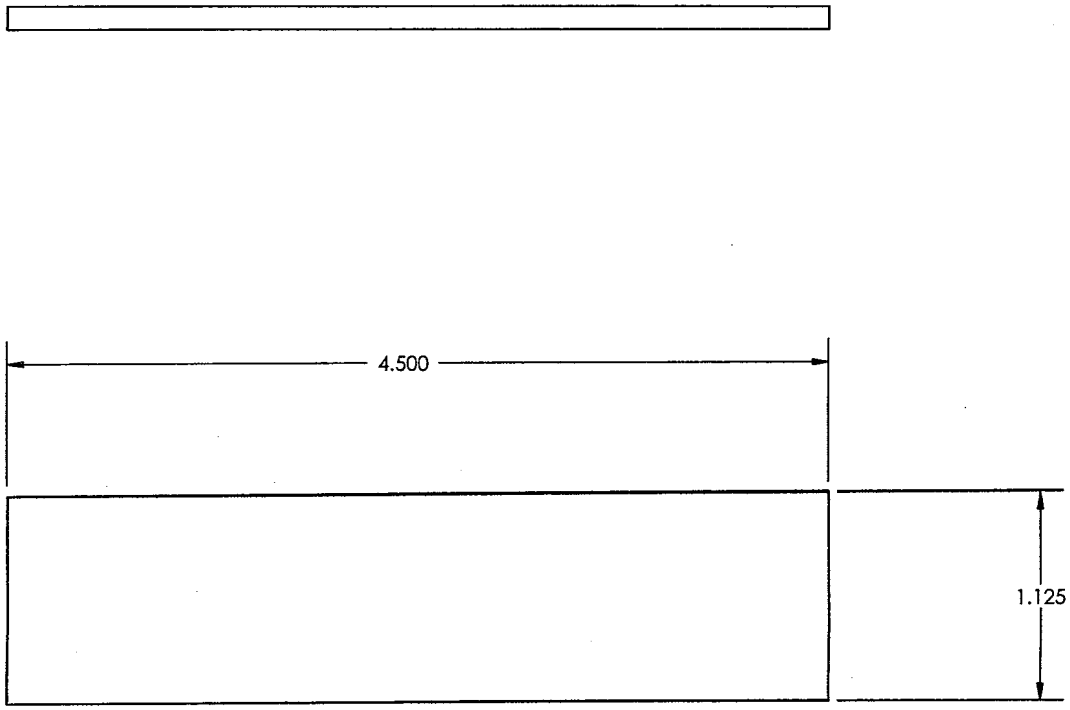

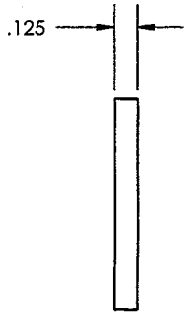

7661612-4

ITEM NO.	--	QTY REQD	1

UNLESS OTHERWISE SPECIFIED DIMENSIONS ARE IN INCHES TOLERANCES ARE:

DECIMALS	ANGLES
±0.010	±0.01

MATERIAL --

FINISH --

DO NOT SCALE DRAWING

CAD GENERATED DRAWING, DO NOT MANUALLY UPDATE

	NAME	DATE
DRAWN	David Zipkin	2004-10-20
CHECKED	-	-
ENG APPR.	-	-

COMMENTS:

NAVSEA - PHILADELPHIA
1569 CONSTITUTION AVE.
PHILADELPHIA, PA 19112

Third Angle Projection

PART NAME:
250-KS4 ENGINE CRADLE: INNER ENGINE MOUNTING BRACKET

SIZE	CAGE	WGN	NAVSEA DWG. NO.	REV.
A	89256	803	7661612	A

SCALE 1:1 | CAD FILE: rimms lifting bracket | SHEET 5 OF 10

REVISIONS				
ZONE	REV.	DESCRIPTION	DATE	APPROVED
	A	Initial Issue	--	--

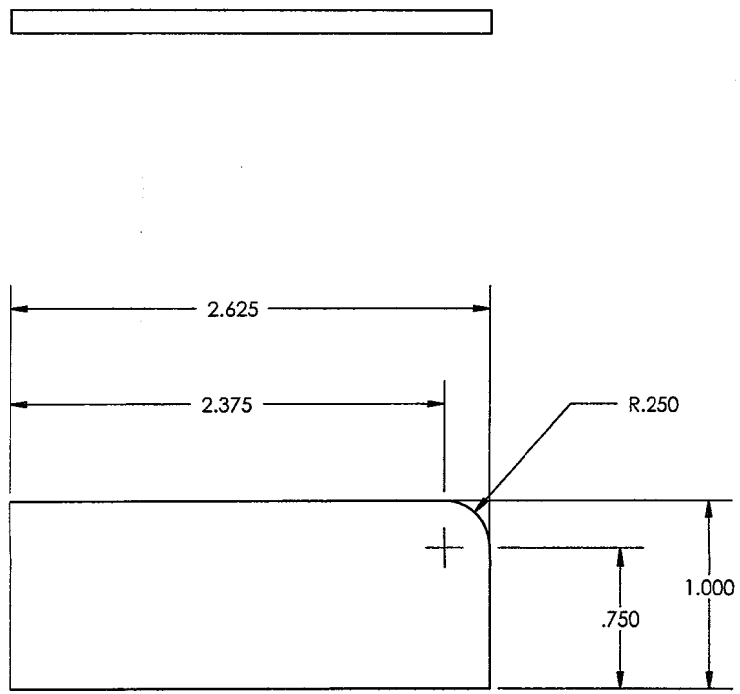

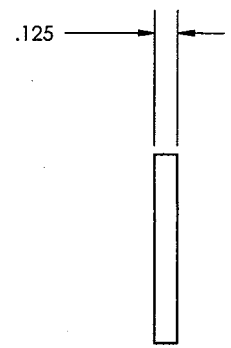

7661612-5

ITEM NO.	--	QTY REQD	1

UNLESS OTHERWISE SPECIFIED DIMENSIONS ARE IN INCHES
TOLERANCES ARE:
DECIMALS ±0.010 ANGLES ±0.01

MATERIAL --

FINISH --

DO NOT SCALE DRAWING

CAD GENERATED DRAWING, DO NOT MANUALLY UPDATE

	NAME	DATE
DRAWN	David Zipkin	2004-10-20
CHECKED	--	--
ENG APPR.	--	--

COMMENTS:

NAVSEA - PHILADELPHIA
1569 CONSTITUTION AVE.
PHILADELPHIA, PA 19112

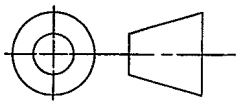

Third Angle Projection

PART NAME:
250-KS4 ENGINE CRADLE: INNER ENGINE MOUNTING BRACKET

SIZE	CAGE	WGN	NAVSEA DWG. NO.	REV.
A	89256	803	7661612	A

SCALE 1:1 | CAD FILE: rimms lifting bracket | SHEET 6 OF 10

ZONE	REV.	REVISIONS DESCRIPTION	DATE	APPROVED
	A	Initial Issue	–	–

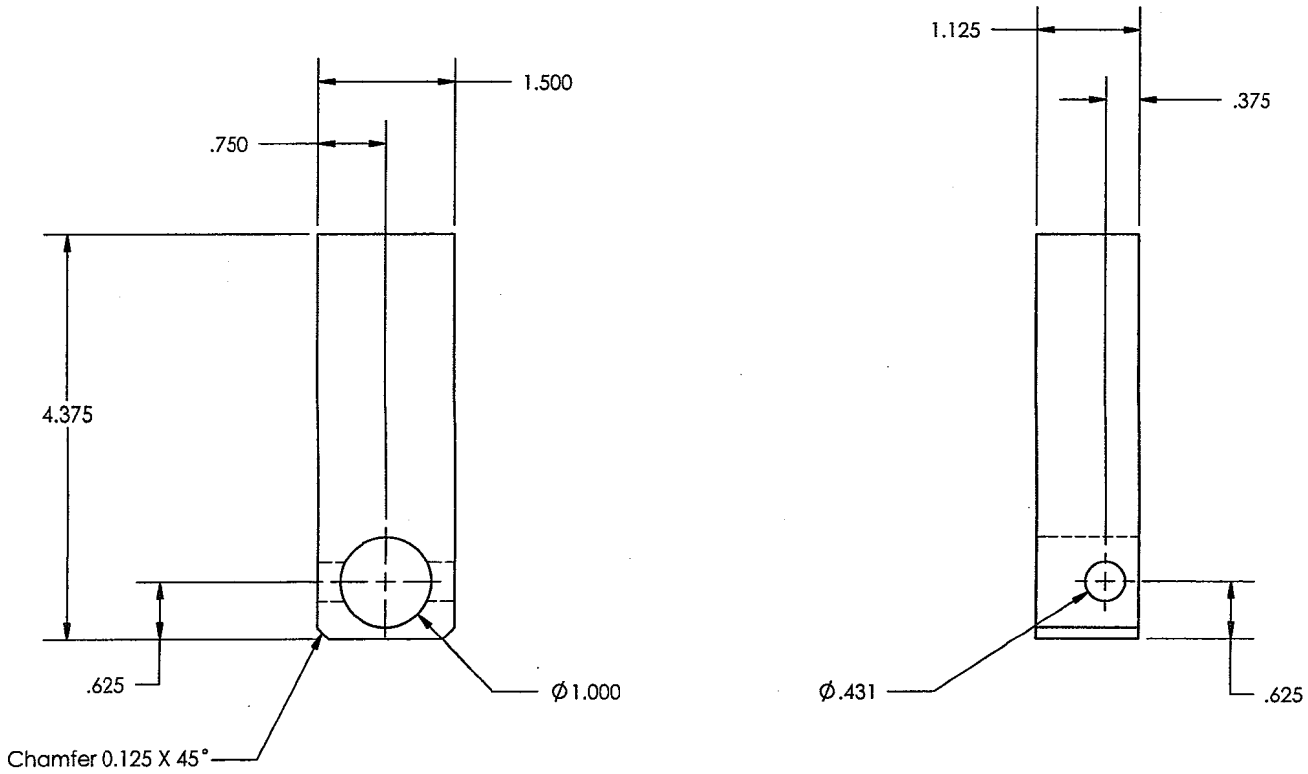

7661612-6

ITEM NO.	--	QTY REQD	1

UNLESS OTHERWISE SPECIFIED DIMENSIONS ARE IN INCHES TOLERANCES ARE:

DECIMALS	ANGLES
±0.010	±0.01

MATERIAL --

FINISH --

DO NOT SCALE DRAWING

CAD GENERATED DRAWING, DO NOT MANUALLY UPDATE

	NAME	DATE
DRAWN	David Zipkin	2004-10-20
CHECKED	--	--
ENG APPR.	--	--

COMMENTS:

NAVSEA - PHILADELPHIA
1569 CONSTITUTION AVE.
PHILADELPHIA, PA 19112

Third Angle Projection

PART NAME:
250-KS4 ENGINE CRADLE: INNER ENGINE MOUNTING BRACKET

SIZE	CAGE	WGN	NAVSEA DWG. NO.	REV.
A	89256	803	7661612	A

SCALE 1:2 | CAD FILE: rimms lifting bracket | SHEET 7 OF 10

ZONE	REV.	REVISIONS DESCRIPTION	DATE	APPROVED
	A	Initial Issue	--	--

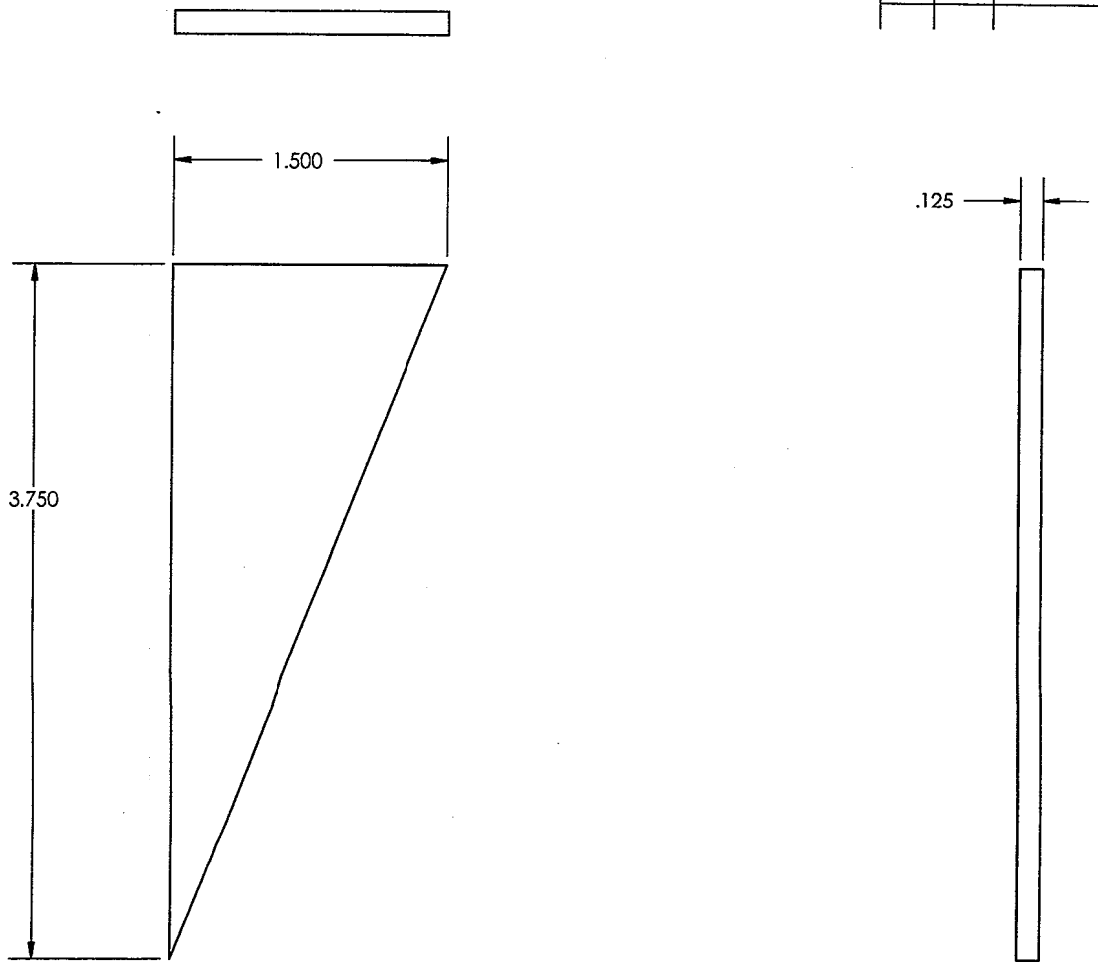

7661612-7

ITEM NO. --	QTY REQD 1		
UNLESS OTHERWISE SPECIFIED DIMENSIONS ARE IN INCHES TOLERANCES ARE: DECIMALS ±0.010 ANGLES ±0.01	CAD GENERATED DRAWING, DO NOT MANUALLY UPDATE		
MATERIAL --	DRAWN	David Zipkin	2004-10-20
FINISH --	CHECKED	--	--
DO NOT SCALE DRAWING	ENG APPR.	--	--
	COMMENTS:		

NAVSEA - PHILADELPHIA
1569 CONSTITUTION AVE.
PHILADELPHIA, PA 19112

Third Angle Projection

PART NAME:
250-KS4 ENGINE CRADLE: INNER ENGINE MOUNTING BRACKET

SIZE	CAGE	WGN	NAVSEA DWG. NO.	REV.
A	89256	803	7661612	A

SCALE 1:1 | CAD FILE: rimms lifting bracket | SHEET 8 OF 10

REVISIONS				
ZONE	REV.	DESCRIPTION	DATE	APPROVED
	A	Initial Issue	--	--

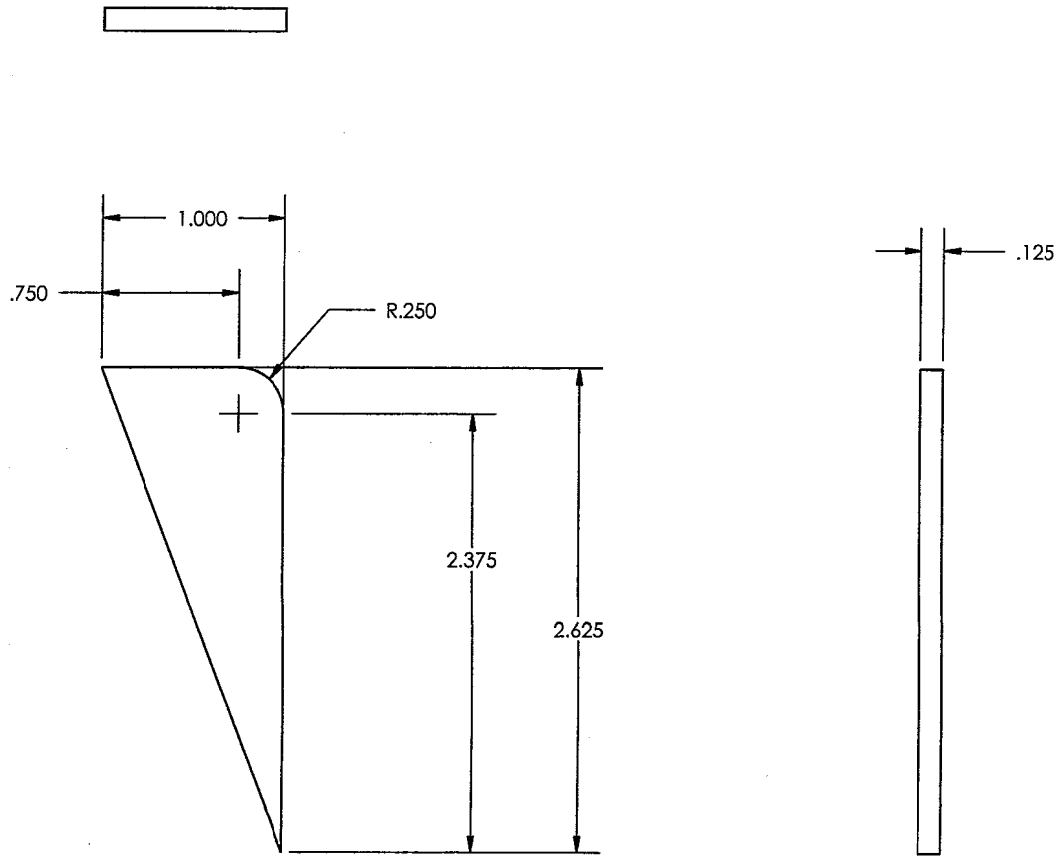

7661612-8

ITEM NO.	--	QTY REQD	1

UNLESS OTHERWISE SPECIFIED DIMENSIONS ARE IN INCHES TOLERANCES ARE:

DECIMALS ±0.010 ANGLES ±0.01

MATERIAL --

FINISH --

DO NOT SCALE DRAWING

CAD GENERATED DRAWING, DO NOT MANUALLY UPDATE

	NAME	DATE
DRAWN	David Zipkin	2004-10-20
CHECKED	--	--
ENG APPR.	--	--

COMMENTS:

NAVSEA - PHILADELPHIA
1569 CONSTITUTION AVE.
PHILADELPHIA, PA 19112

Third Angle Projection

PART NAME:
250-KS4 ENGINE CRADLE: INNER ENGINE MOUNTING BRACKET

SIZE	CAGE	WGN	NAVSEA DWG. NO.	REV.
A	89256	803	7661612	A

SCALE 1:1 | CAD FILE: rimms lifting bracket | SHEET 9 OF 10

ZONE	REV.	REVISIONS DESCRIPTION	DATE	APPROVED
	A	Initial Issue	–	–

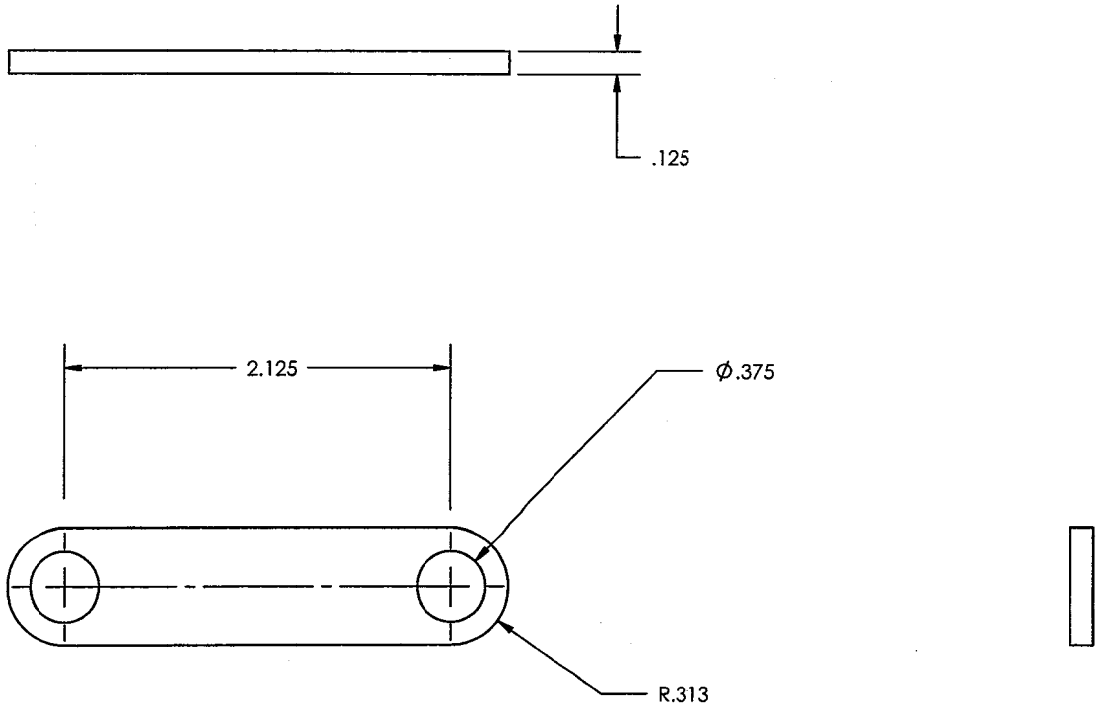

7661612-9

ITEM NO.	--	QTY REQD	1

UNLESS OTHERWISE SPECIFIED DIMENSIONS ARE IN INCHES TOLERANCES ARE:

DECIMALS	ANGLES
±0.010	±0.01

MATERIAL --

FINISH --

DO NOT SCALE DRAWING

CAD GENERATED DRAWING, DO NOT MANUALLY UPDATE

	NAME	DATE
DRAWN	David Zipkin	2004-10-20
CHECKED	--	--
ENG APPR.	--	--

COMMENTS:

NAVSEA - PHILADELPHIA
1569 CONSTITUTION AVE.
PHILADELPHIA, PA 19112

Third Angle Projection

PART NAME:
250-KS4 ENGINE CRADLE: INNER ENGINE MOUNTING BRACKET

SIZE	CAGE	WGN	NAVSEA DWG. NO.	REV.
A	89256	803	7661612	A

SCALE 1:1 | CAD FILE: rimms lifting bracket | SHEET 10 OF 10

Distribution Statement A: Approved for public release; Distribution unlimited.

ZONE	REV.	REVISIONS DESCRIPTION	DATE	APPROVED
	A	Initial Issue	--	--

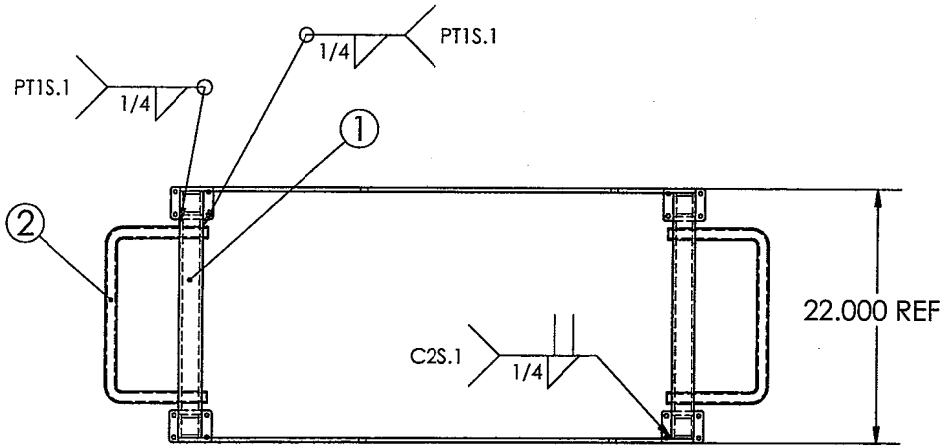

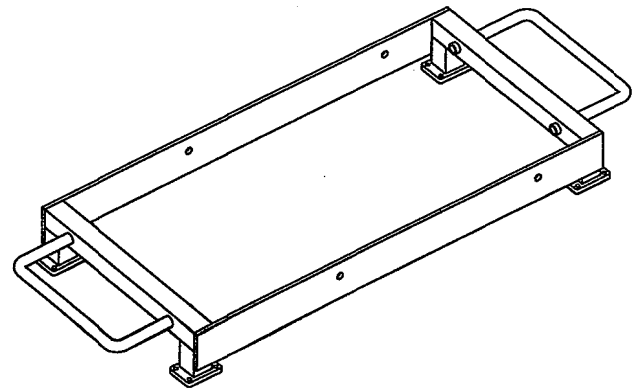

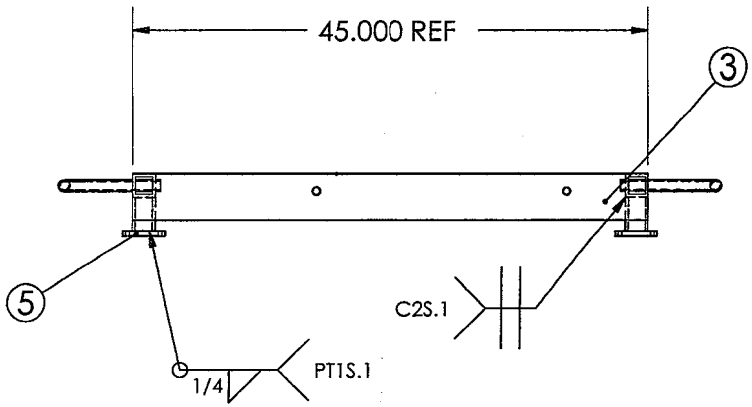

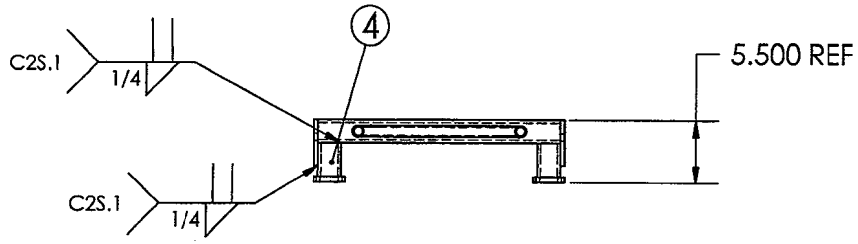

Note:
1. Break all sharp edges/Remove all burrs
2. Welding shall conform to NAVSEA S9074-AR-GIB-010/278, class M-2, category C, process GMAW or GTAW, weld and inspection symbols used herein conform to ANSI/AWS A2.4

QTY REQD	FSCM NO.	PART OR IDENTIFYING NO.	NOMENCLATURE OR DESCRIPTION	MATERIAL SPECIFICATION	ZONE	ITEM NO.
4		7661801-5	Sheet Stock; 3.75" x 2.75" x 0.5"	AMS 4027		5
4		7661801-4	Square Tube Stock; 2" x 2" x 0.25" Wall; 3" Long	AMS 4150		4
2		7661801-3	Sheet Stock; 45" x 4" x 0.375"	AMS 4027		3
2		7661801-2	Round Tube Stock; 1" OD x 0.125" Wall Thickness	AMS 4150		2
2		7661801-1	Square Tube Stock; 2" x 2" x 0.25" Wall; 21.25" Long	AMS 4150		1
-1						

PARTS LIST

ITEM NO. --
QTY REQD 1

UNLESS OTHERWISE SPECIFIED DIMENSIONS ARE IN INCHES TOLERANCES ARE:
DECIMALS ±0.010
ANGLES ±0.10

MATERIAL --

FINISH --

DO NOT SCALE DRAWING

CAD GENERATED DRAWING, DO NOT MANUALLY UPDATE

	NAME	DATE
DRAWN	David Zipkin	2004-10-20
CHECKED	--	--
ENG APPR.	--	--

COMMENTS:

NAVSEA - PHILADELPHIA
1569 CONSTITUTION AVE.
PHILADELPHIA, PA 19112

Third Angle Projection

PART NAME:
250-KS4 Engine Cradle: Outer Engine Mounting Sub-Assembly

SIZE	CAGE	WGN	NAVSEA DWG. NO.	REV.
A	89256	803	7661801	A

SCALE 1:16 | CAD FILE: outer cradle weld | SHEET 1 OF 6

ZONE	REV.	REVISIONS DESCRIPTION	DATE	APPROVED
	A	Initial Issue	--	--

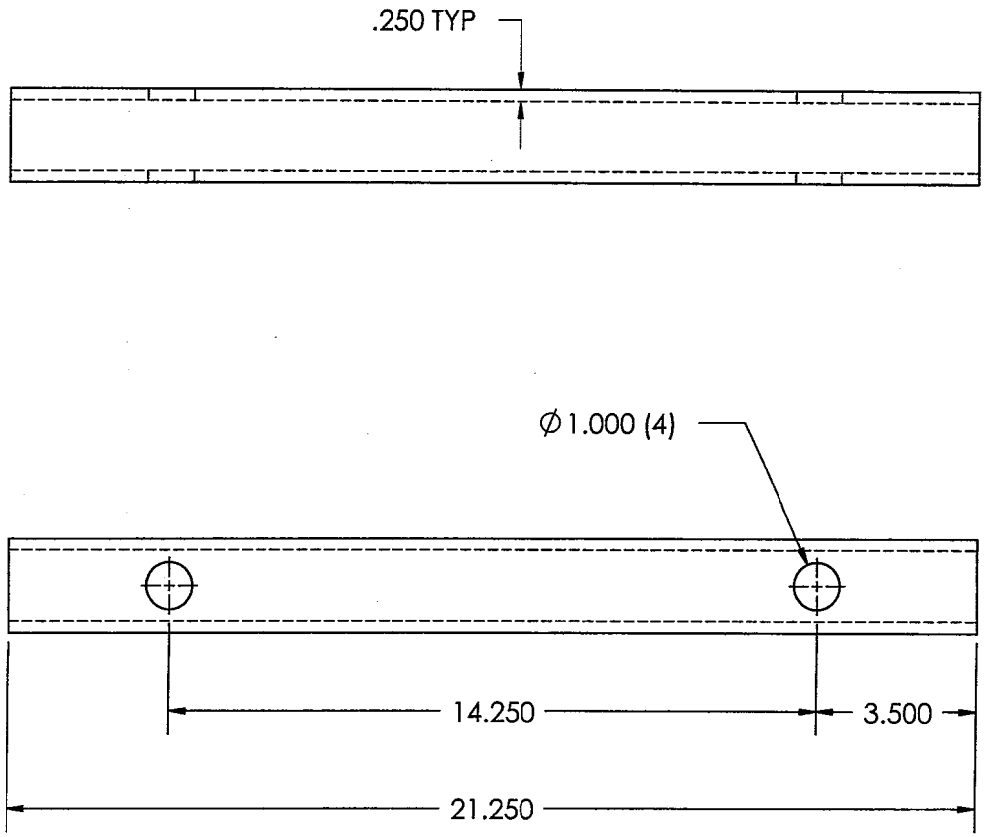

7661801-1

ITEM NO.	--	QTY REQD	1

UNLESS OTHERWISE SPECIFIED DIMENSIONS ARE IN INCHES TOLERANCES ARE:
DECIMALS ±0.010 ANGLES ±0.10

MATERIAL --

FINISH --

DO NOT SCALE DRAWING

CAD GENERATED DRAWING, DO NOT MANUALLY UPDATE

	NAME	DATE
DRAWN	David Zipkin	2004-10-20
CHECKED	--	--
ENG APPR.	--	--

COMMENTS:

NAVSEA - PHILADELPHIA
1569 CONSTITUTION AVE.
PHILADELPHIA, PA 19112

Third Angle Projection

PART NAME:
250-KS4 Engine Cradle: Outer Engine Mounting Sub-Assembly

SIZE	CAGE	WGN	NAVSEA DWG. NO.	REV.
A	89256	803	7661801	A

SCALE 1:4 | CAD FILE: outer cradle weld | SHEET 2 OF 6

ZONE	REV.	REVISIONS DESCRIPTION	DATE	APPROVED
	A	Initial Issue	–	–

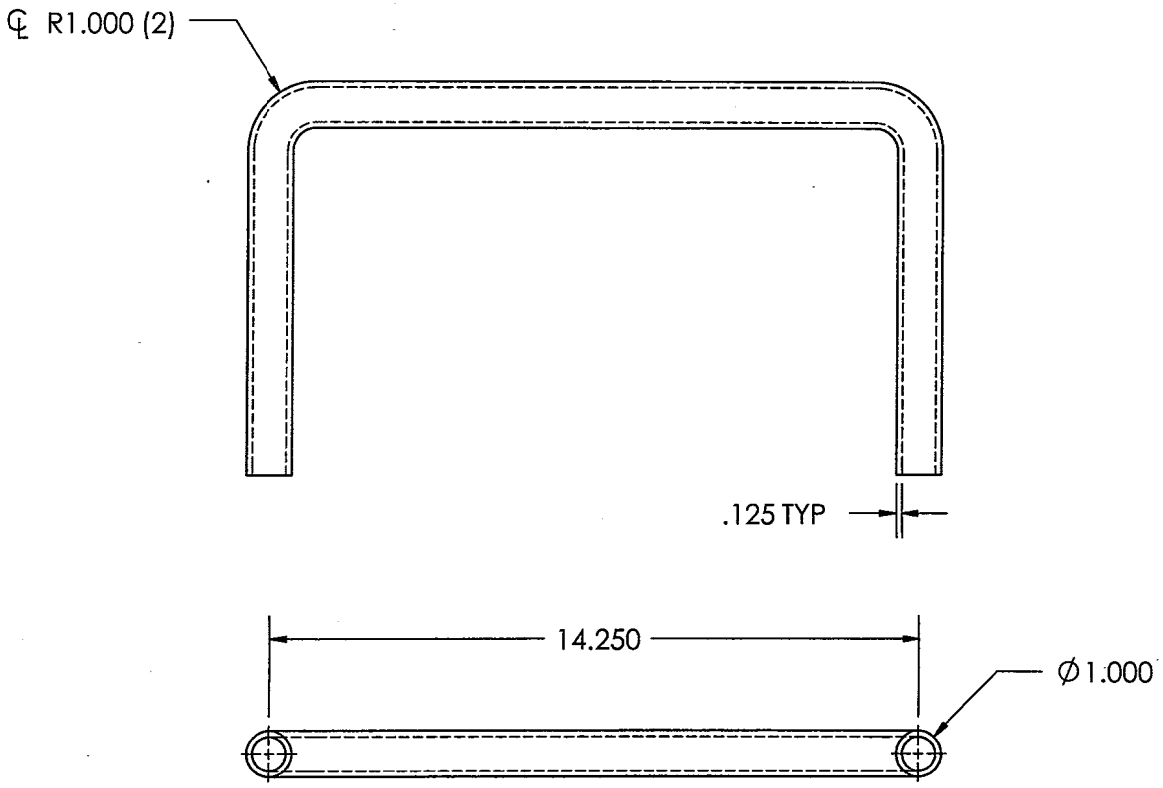

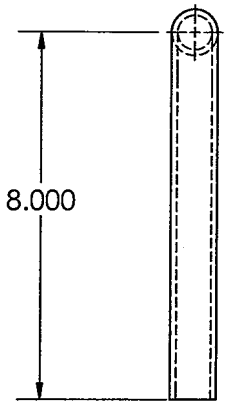

7661801-2

ITEM NO.	–	QTY REQD	1

UNLESS OTHERWISE SPECIFIED DIMENSIONS ARE IN INCHES TOLERANCES ARE:

DECIMALS	ANGLES
±0.010	±0.10

MATERIAL –

FINISH –

DO NOT SCALE DRAWING

CAD GENERATED DRAWING. DO NOT MANUALLY UPDATE

	NAME	DATE
DRAWN	David Zipkin	2004-10-20
CHECKED	–	–
ENG APPR.	–	–

COMMENTS:

NAVSEA - PHILADELPHIA
1569 CONSTITUTION AVE.
PHILADELPHIA, PA 19112

Third Angle Projection

PART NAME:
250-KS4 Engine Cradle: Outer Engine Mounting Sub-Assembly

SIZE	CAGE	WGN	NAVSEA DWG. NO.	REV.
A	89256	803	7661801	A

SCALE 1:4 | CAD FILE: outer cradle weld | SHEET 3 OF 6

ZONE	REV.	REVISIONS DESCRIPTION	DATE	APPROVED
	A	Initial Issue	–	–

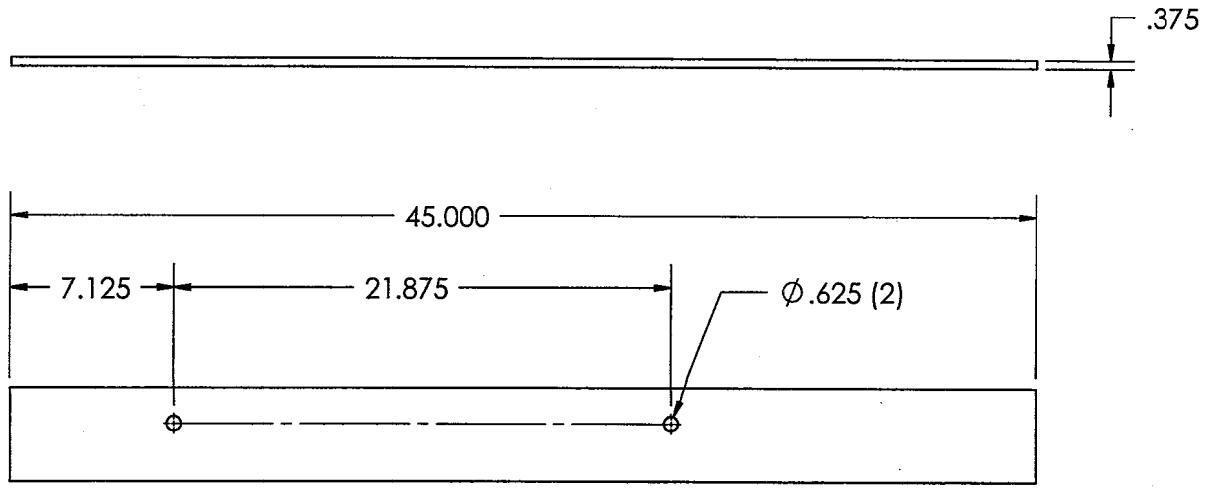

7661801-3

ITEM NO.	–	QTY REQD	1

UNLESS OTHERWISE SPECIFIED DIMENSIONS ARE IN INCHES TOLERANCES ARE:

DECIMALS	ANGLES
±0.010	±0.10

MATERIAL –

FINISH –

DO NOT SCALE DRAWING

CAD GENERATED DRAWING, DO NOT MANUALLY UPDATE

	NAME	DATE
DRAWN	David Zipkin	2004-10-20
CHECKED	–	–
ENG APPR.	–	–

COMMENTS:

NAVSEA - PHILADELPHIA
1569 CONSTITUTION AVE.
PHILADELPHIA, PA 19112

Third Angle Projection

PART NAME:
250-KS4 Engine Cradle: Outer Engine Mounting Sub-Assembly

SIZE	CAGE	WGN	NAVSEA DWG. NO.	REV.
A	89256	803	7661801	A

SCALE 1:8 | CAD FILE: outer cradle weld | SHEET 4 OF 6

ZONE	REV.	REVISIONS DESCRIPTION	DATE	APPROVED
	A	Initial Issue	–	–

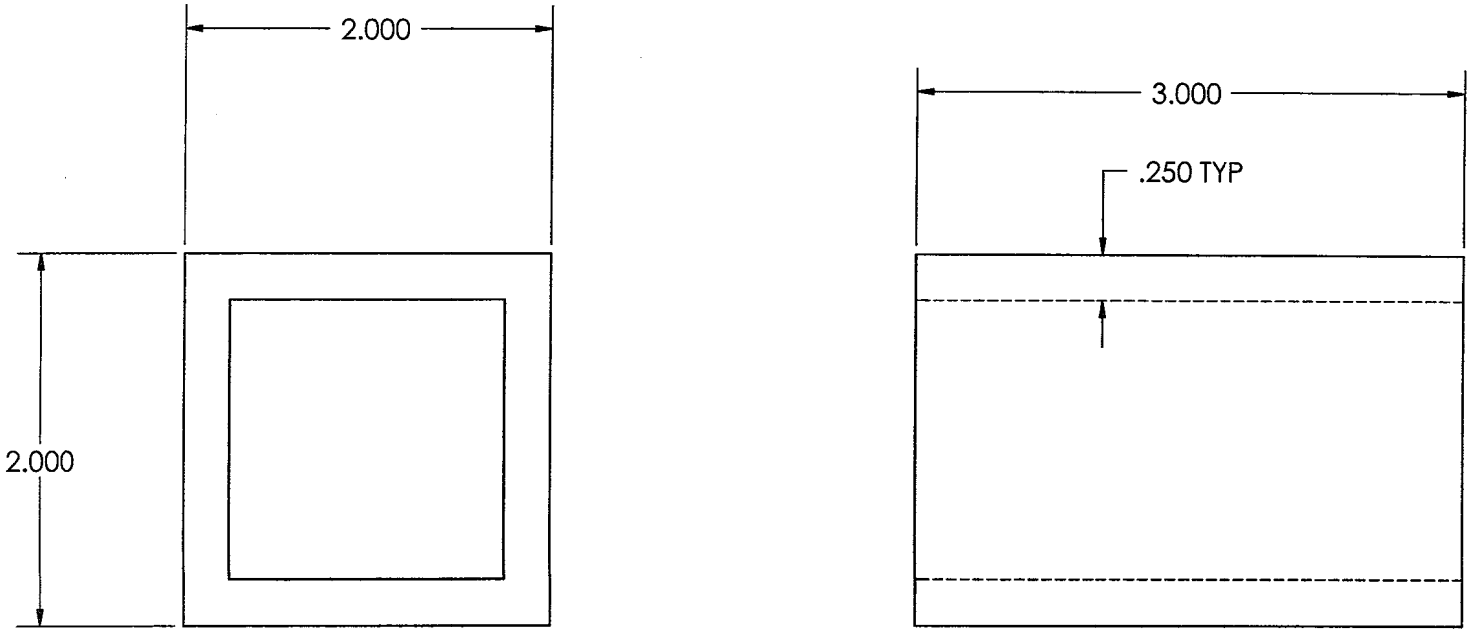

7661801-4

ITEM NO.	--	QTY REQD	1

UNLESS OTHERWISE SPECIFIED DIMENSIONS ARE IN INCHES TOLERANCES ARE:

DECIMALS	ANGLES
±0.010	±0.10

MATERIAL --

FINISH --

DO NOT SCALE DRAWING

CAD GENERATED DRAWING, DO NOT MANUALLY UPDATE

	NAME	DATE
DRAWN	David Zipkin	2004-10-20
CHECKED	--	--
ENG APPR.	--	--

COMMENTS:

NAVSEA - PHILADELPHIA
1569 CONSTITUTION AVE.
PHILADELPHIA, PA 19112

Third Angle Projection

PART NAME:
250-KS4 Engine Cradle: Outer Engine Mounting Sub-Assembly

SIZE	CAGE	WGN	NAVSEA DWG. NO.	REV.
A	89256	803	7661801	A

SCALE 1:1 | CAD FILE: outer cradle weld | SHEET 5 OF 6

REVISIONS				
ZONE	REV.	DESCRIPTION	DATE	APPROVED
	A	Initial Issue	--	--

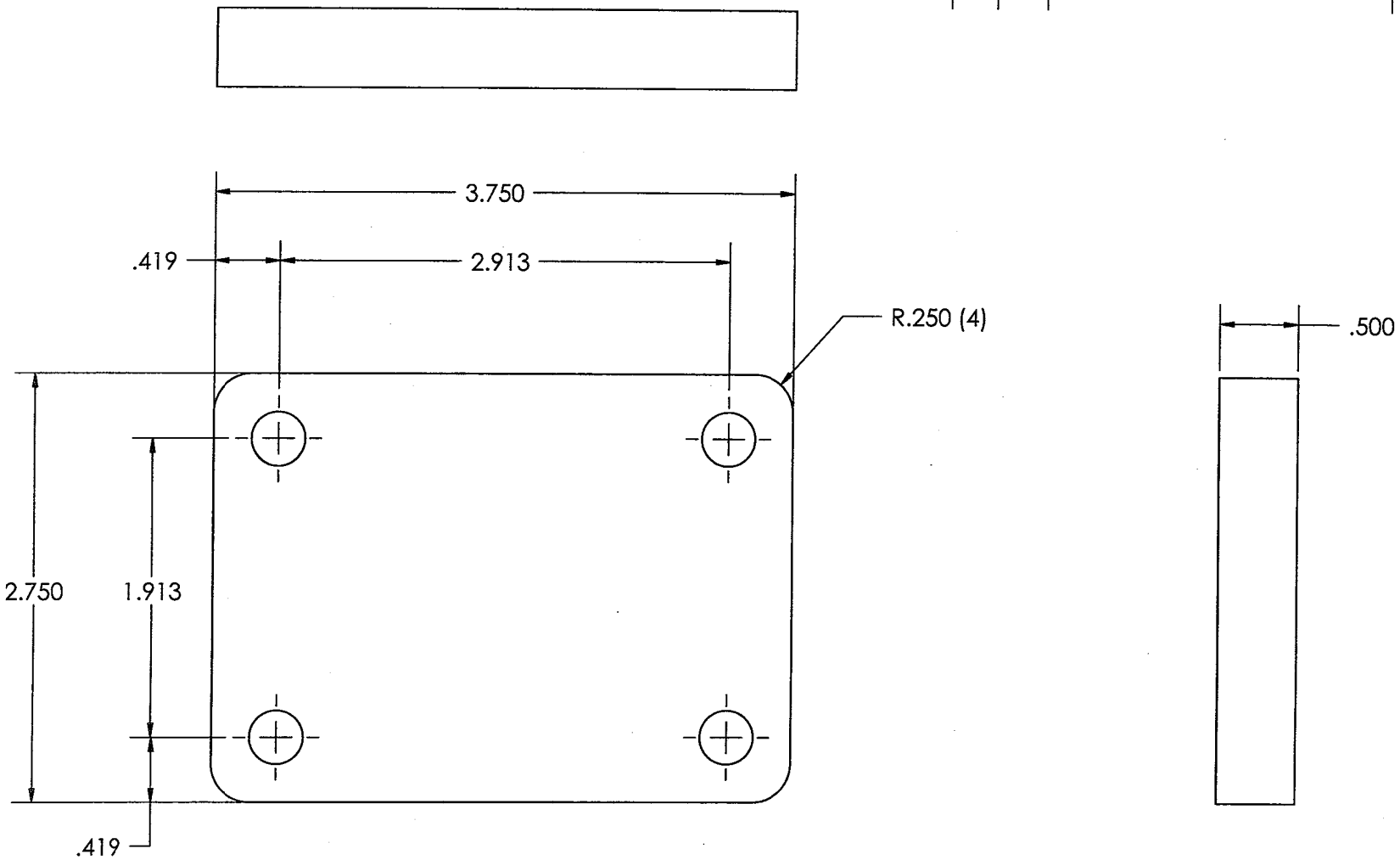

7661801-5

ITEM NO.	--	QTY REQD	1

UNLESS OTHERWISE SPECIFIED DIMENSIONS ARE IN INCHES TOLERANCES ARE:
DECIMALS ±0.010 ANGLES ±0.10

MATERIAL --

FINISH --

DO NOT SCALE DRAWING

CAD GENERATED DRAWING, DO NOT MANUALLY UPDATE

	NAME	DATE
DRAWN	David Zipkin	2004-10-20
CHECKED	--	--
ENG APPR.	--	--

COMMENTS:

NAVSEA - PHILADELPHIA
1569 CONSTITUTION AVE.
PHILADELPHIA, PA 19112

Third Angle Projection

PART NAME:
250-KS4 Engine Cradle: Outer Engine Mounting Sub-Assembly

SIZE	CAGE	WGN	NAVSEA DWG. NO.	REV.
A	89256	803	7661801	A

SCALE 1:1 | CAD FILE: outer cradle weld | SHEET 6 OF 6