SOLICITATION/CONTRACT/ORDER FOR COMMERCIAL ITEMS

OFFEROR TO COMPLETE BLOCKS 12, 17, 23, 24, & 30

1. REQUISITION NUMBER: 93420 40164554

2. CONTRACT NO.

3. AWARD/EFFECTIVE DATE

4. ORDER NUMBER

5. SOLICITATION NUMBER: N65540-04-Q-0137

6. SOLICITATION ISSUE DATE: 04-MAR-02

7. FOR SOLICITATION INFORMATION CALL:

a. NAME: ELIZABETH RAINEY

b. TELEPHONE NUMBER (No Collect Calls): 215-897-7061
215-897-7059 (FAX)

8. OFFER DUE DATE/ LOCAL TIME: 04-MAR-11/ 0500 PM

9. ISSUED BY — CODE N65540

CONTRACTING OFFICER
NSWC CARDEROCK DIVISION
5001 S. BROAD STREET
PHILADELPHIA PA 19112-1403

ATTN: ELIZABETH RAINEY 215-897-7061

10. THIS ACQUISITION IS
- [X] UNRESTRICTED
- [ ] SET ASIDE: % FOR
  - [ ] SMALL BUSINESS
  - [ ] SMALL DISADV. BUSINESS
  - [ ] 8(A)

SIC:
SIZE STANDARD:

11. DELIVERY FOR FOB DESTINATION UNLESS BLOCK IS MARKED
- [X] SEE SCHEDULE

12. DISCOUNT TERMS

13a. THIS CONTRACT IS A RATED ORDER UNDER DPAS (15 CFR 700) [ ]

13b. RATING

14. METHOD OF SOLICITATION
- [X] RFQ
- [ ] IFB
- [ ] RFP

15. DELIVER TO — CODE N65540

RECEIVING OFFICER,FISC,
NSWC CARDEROCK DIVISION
1601 LANGLEY AVENUE
PHILA. PA 19112-5051
ATTN: NAVAL BUSINESS CENTER

16. ADMINISTERED BY — CODE N65540

17a. CONTRACTOR/ OFFEROR — CODE — FACILITY CODE

TELEPHONE NO.

[ ] 17b. CHECK IF REMITTANCE IS DIFFERENT AND PUT SUCH ADDRESS IN OFFER

18a. PAYMENT WILL BE MADE BY — CODE

18b. SUBMIT INVOICES TO ADDRESS SHOWN IN BLOCK 18a UNLESS BLOCK BELOW IS CHECKED [ ] SEE ADDENDUM

19. ITEM NO.	20. SCHEDULE OF SUPPLIES/SERVICES	21. QUANTITY	22. UNIT	23. UNIT PRICE	24. AMOUNT
0001	REQN. NO. 93420 /40164554 ITEM NAME: 150 HP VSD SYSTEM	1	EA		
0002	REQN. NO. 93420 /40164565 ITEM NAME: EMI TEST REPORT FOR 150 HP VSD SYSTEM	1	EA		

(Attach Additional Sheets as Necessary)

25. ACCOUNTING AND APPROPRIATION DATA

26. TOTAL AWARD AMOUNT (For Govt. Use Only)

[ ] 27a. SOLICITATION INCORPORATES BY REFERENCE FAR 52.212-1, 52.212-4. FAR 52.212-3, AND 52.212-5 ARE ATTACHED. ADDENDA [ ] ARE [X] ARE NOT ATTACHED.

[ ] 27b. CONTRACT/PURCHASE ORDER INCORPORATES BY REFERENCE FAR 52.212-4. FAR 52.212-5 IS ATTACHED. ADDENDA [ ] ARE [ ] ARE NOT ATTACHED.

[ ] 28. CONTRACTOR IS REQUIRED TO SIGN THIS DOCUMENT AND RETURN _____ COPIES TO ISSUING OFFICE. CONTRACTOR AGREES TO FURNISH AND DELIVER ALL ITEMS SET FORTH OR OTHERWISE IDENTIFIED ABOVE AND ON ANY ADDITIONAL SHEETS SUBJECT TO THE TERMS AND CONDITIONS SPECIFIED HEREIN.

[ ] 29. AWARD OF CONTRACT: REFERENCE _____ OFFER DATED _____. YOUR OFFER ON SOLICITATION (BLOCK 5). INCLUDING ANY ADDITIONS OR CHANGES WHICH ARE SET FORTH HEREIN, IS ACCEPTED AS TO ITEMS:

30a. SIGNATURE OF OFFEROR/CONTRACTOR

31a. UNITED STATES OF AMERICA (SIGNATURE OF CONTRACTING OFFICER)

30b. NAME AND TITLE OF SIGNER (TYPE OR PRINT)

30c. DATE SIGNED

31b. NAME OF CONTRACTING OFFICER (TYPE OR PRINT)

31c. DATE SIGNED

32a. QUANTITY IN COLUMN 21 HAS BEEN
- [ ] RECEIVED
- [ ] INSPECTED
- [ ] ACCEPTED, AND CONFORMS TO THE CONTRACT, EXCEPT AS NOTED

32b. SIGNATURE OF AUTHORIZED GOVT. REPRESENTATIVE

32c. DATE

33. SHIP NUMBER — [ ] PARTIAL [ ] FINAL

34. VOUCHER NUMBER

35. AMOUNT VERIFIED CORRECT FOR

36. PAYMENT
- [ ] COMPLETE
- [ ] PARTIAL
- [ ] FINAL

37. CHECK NUMBER

38. S/R ACCOUNT NUMBER

39. S/R VOUCHER NUMBER

40. PAID BY

41a. I CERTIFY THIS ACCOUNT IS CORRECT AND PROPER FOR PAYMENT

41b. SIGNATURE AND TITLE OF CERTIFYING OFFICER

41c. DATE

42a. RECEIVED BY (Print)

42b. RECEIVED AT (Location)

42c. DATE REC'D (YY/MM/DD)

42d. TOTAL CONTAINERS

This Request for Quotations (RFQ) covers the acquisition of a 150 HP Variable Speed Drive System under Item 0001 in accordance with the Specification provided as Attachment I. It also provides for the furnishing of associated Technical Data, consisting of an EMI Test Report under Item 0002, an Interface Requirements Test Report under Item 0003 and a Technical Manual under Item 0004.

This REQ is issued using Simplified Acquisition Procedures pursuant to the Test Program for Certain Commercial Items in accordance with Subpart 13.5 of the Federal Acquisition Regulation (FAR).

The Government intends to award a firm-fixed price purchase order to the low price technically acceptable offeror. Technical acceptability will be determined based on an evaluation of the following criteria or factors: Ship Interface Design, EMI Testing and Interface Requirements Testing and Corporate Experience. As detailed in Attachment II to this RFQ, offerors are required to furnish information on these three factors as part of any quotation submitted in response to this RFQ. Any quotation that does not include information on the technical evaluation factors identified above may not be considered.

List of Attachments:

I - 150 HP Variable Speed Drive Specification (10 pages)
II - Technical Evaluation Criteria (2 page)

VENDOR:

SECTION B SUPPLIES/SERVICES

ITEM	SUPPLIES/SERVICES	QUANTITY	UI	U-PRICE	AMOUNT
	150 HP VSD SYSTEM				
0003	REQN. NO. 93420 /40164575 ITEM NAME: INTERFACE REQUIREMENTS TEST REPORT FOR 150 HP VSD SYSTEM	1	EA		
0004	REQN. NO. 93420 /40164582 ITEM NAME: TECHNICAL MANUAL FOR 150 HP VSD SYSTEM	1	EA		

VENDOR:

SECTION F TIME OF DELIVERY

DELIVERIES SHALL BE IN ACCORDANCE WITH THE FOLLOWING SPECIFICATIONS

ITEM	QUANTITY	DELIVERY REQUIRED
0001	1 EA	DELIVERY WITHIN 200 DAYS ARO
0002	1 EA	DELIVERY WITHIN 165 DAYS ARO
0003	1 EA	DELIVERY WITHIN 165 DAYS ARO
0004	1 EA	DELIVERY WITHIN 200 DAYS ARO

52.212-4 CONTRACT TERMS AND CONDITIONS--COMMERCIAL ITEMS (OCT 2003)

(a) Inspection/Acceptance. The Contractor shall only tender for acceptance those items that conform to the requirements of this contract. The Government reserves the right to inspect or test any supplies or services that have been tendered for acceptance. The Government may require repair or replacement of nonconforming supplies or reperformance of nonconforming services at no increase in contract price. The Government must exercise its post-acceptance rights--(1) Within a reasonable time after the defect was discovered or should have been discovered; and (2) Before any substantial change occurs in the condition of the item, unless the change is due to the defect in the item.

(b) Assignment. The Contractor or its assignee may assign its rights to receive payment due as a result of performance of this contract to a bank, trust company, or other financing institution, including any Federal lending agency in accordance with the Assignment of Claims Act (31 U.S.C. 3727). However, when a third party makes payment (e.g., use of the Governmentwide commercial purchase card), the Contractor may not assign its rights to receive payment under this contract.

(c) Changes. Changes in the terms and conditions of this contract may be made only by written agreement of the parties.

(d) Disputes. This contract is subject to the Contract Disputes Act of 1978, as amended (41 U.S.C. 601-613). Failure of the parties to this contract to reach agreement on any request for equitable adjustment, claim, appeal or action arising under or relating to this contract shall be a dispute to be resolved in accordance with the clause at FAR 52.233-1, Disputes, which is incorporated herein by reference. The Contractor shall proceed diligently with performance of this contract, pending final resolution of any dispute arising under the contract.

(e) Definitions. The clause at FAR 52.202-1, Definitions, is incorporated herein by reference.

(f) Excusable delays. The Contractor shall be liable for default unless nonperformance is caused by an occurrence Beyond the reasonable control of the Contractor and without its fault or negligence such as, acts of God or the public enemy, acts of the Government in either its sovereign or contractual capacity, fires, floods, epidemics, quarantine restrictions, strikes, unusually severe weather, and delays

VENDOR:

of common carriers. The Contractor shall notify the Contracting Officer in writing as soon as it is reasonably possible after the commencement of any excusable delay, setting forth the full particulars in connection therewith, shall remedy such occurrence with all reasonable dispatch, and shall promptly give written notice to the Contracting Officer of the cessation of such occurrence.

(g) Invoice. (1) The Contractor shall submit an original invoice and three copies (or electronic invoice, if authorized,) to the address designated in the contract to receive invoices. An invoice must include--

(i) Name and address of the Contractor;

(ii) Invoice date and number;

(iii) Contract number, contract line item number and, if applicable, the order number;

(iv) Description, quantity, unit of measure, unit price and extended price of the items delivered;

(v) Shipping number and date of shipment including the bill of lading number and weight of shipment if shipped on Government bill of lading;

(vi) Terms of any discount for prompt payment offered;

(vii) Name and address of official to whom payment is to be sent;

(viii) Name, title, and phone number of person to notify in event of defective invoice; and

(ix) Taxpayer Indentification Number (TIN). The Contractor shall include its TIN on the invoice only if required elseswhere in this contract.

(x) Electronic funds transfer (EFT) banking information.

(A) The Contractor shall include EFT banking information on the invoice only if required elsewhere in this contract.

(B) If EFT banking information is not required to be on the invoice, in order for the invoice to be a proper invoice, the Contractor shall have submitted correct EFT banking information in accordance with the applicable solicitation provision, contract clause (e.g., 52.232-33, Payment by Electronic Funds Transfer Central Contractor Registration, or 52.232-34, Payment by Electronic Funds Transfer Other Than Central Contractor Registration), or applicable agency procedures.

(C) EFT banking information is not required if the Government waived the requirement to pay by EFT.

(2) Invoices will be handled in accordance with the Prompt Payment Act (31 U.S.C. 3903) and Office of Management and Budget (OMB) prompt payment regulations at 5 CFR part 1315.

(h) Patent indemnity. The Contractor shall indemnify the Government and its officers, employees and agents against liability, including costs, for actual or alleged direct or contributory infringement of, or inducement to infringe, any United States or foreign patent, trademark or copyright, arising out of the performance of this contract, provided the Contractor is reasonably notified of such claims and proceedings.

(i) Payment. (1) Items accepted. Payment shall be made for items accepted by the Government that have been delivered to the delivery destinations set forth in this contract.

(2) Prompt payment. The Government will make payment in accordance with the Prompt Payment Act (31 U.S.C. 3903) and prompt payment regulations at 5 CFR part 1315.

(3) Electronic Funds Transfer (EFT). If the Government makes payment by EFT, see 52.212-5(b) for the appropriate EFT clause.

(4) Discount. In connection with any discount offered

VENDOR:

for early payment, time shall be computed from the date of the invoice. For the purpose of computing the discount earned, payment shall be considered to have been made on the date which appears on the payment check or the specified payment date if an electronic funds transfer payment is made.

(5) Overpayments. If the Contractor becomes aware of a duplicate contract financing or invoice payment or that the Government has otherwise overpaid on a contract financing or invoice payment, the Contractor shall immediately notify the Contracting Officer and request instructions for disposition of the overpayment.

(j) Risk of loss. Unless the contract specifically provides otherwise, risk of loss or damage to the supplies provided under this contract shall remain with the Contractor until, and shall pass to the Government upon:

(1) Delivery of the supplies to a carrier, if transportation is f.o.b. origin; or

(2) Delivery of the supplies to the Government at the destination specified in the contract, if transportation is f.o.b. destination.

(k) Taxes. The contract price includes all applicable Federal, State, and local taxes and duties.

(l) Termination for the Government's convenience. The Government reserves the right to terminate this contract, or any part hereof, for its sole convenience. In the event of such termination, the Contractor shall immediately stop all work hereunder and shall immediately cause any and all of its suppliers and subcontractors to cease work. Subject to the terms of this contract, the Contractor shall be paid a percentage of the contract price reflecting the percentage of the work performed prior to the notice of termination, plus reasonable charges the Contractor can demonstrate to the satisfaction of the Government using its standard record keeping system, have resulted from the termination. The Contractor shall not be required to comply with the cost accounting standards or contract cost principles for this purpose. This paragraph does not give the Government any right to audit the Contractor's records. The Contractor shall not be paid for any work performed or costs incurred which reasonably could have been avoided.

(m) Termination for cause. The Government may terminate this contract, or any part hereof, for cause in the event of any default by the Contractor, or if the Contractor fails to comply with any contract terms and conditions, or fails to provide the Government, upon request, with adequate assurances of future performance. In the event of termination for cause, the Government shall not be liable to the Contractor for any amount for supplies or services not accepted, and the Contractor shall be liable to the Government for any and all rights and remedies provided by law. If it is determined that the Government improperly terminated this contract for default, such termination shall be deemed a termination for convenience.

(n) Title. Unless specified elsewhere in this contract, title to items furnished under this contract shall pass to the Government upon acceptance, regardless of when or where the Government takes physical possession.

(o) Warranty. The Contractor warrants and implies that the items delivered hereunder are merchantable and fit for use for the particular purpose described in this contract.

(p) Limitation of liability. Except as otherwise provided by an express warranty, the Contractor will not be liable to the Government for consequential damages resulting from any defect or deficiencies in accepted items.

(q) Other compliances. The Contractor shall comply with all

VENDOR:

applicable Federal, State and local laws, executive orders, rules and regulations applicable to its performance under this contract.

(r) Compliance with laws unique to Government contracts. The Contractor agrees to comply with 31 U.S.C. 1352 relating to limitations on the use of appropriated funds to influence certain Federal contracts; 18 U.S.C. 431 relating to officials not to benefit; 40 U.S.C. 327, et seq., Contract Work Hours and Safety Standards Act; 41 U.S.C. 51-58, Anti-Kickback Act of 1986; 41 U.S.C. 265 and 10 U.S.C. 2409 relating to whistleblower protections; 49 U.S.C. 40118, Fly American; and 41 U.S.C. 423 relating to procurement integrity.

(s) Order of precedence. Any inconsistencies in this solicitation or contract shall be resolved by giving precedence in the following order:

(1) The schedule of supplies/services.

(2) The Assignments, Disputes, Payments, Invoice, Other Compliances, and Compliance with Laws Unique to Government Contracts paragraphs of this clause.

(3) The clause at 52.212-5.

(4) Addenda to this solicitation or contract, including any license agreements for computer software.

(5) Solicitation provisions if this is a solicitation.

(6) Other paragraphs of this clause.

(7) The Standard Form 1449.

(8) Other documents, exhibits, and attachments.

(9) The specification.

(t) Central Contractor Registration (CCR). (1) Unless exempted by an addendum to this contract, the Contractor is responsible during performance and through final payment of any contract for the accuracy and completeness of the data within the CCR database, and for any liability resulting from the Government's reliance on inaccurate or incomplete data. To remain registered in the CCR database after the initial registration, the Contractor is required to review and update on an annual basis from the date of initial registration or subsequent updates its information in the CCR database to ensure it is current, accurate and complete. Updating information in the CCR does not alter the terms and conditions of this contract and is not a substitute for a properly executed contractual document.

(2)(i) If a Contractor has legally changed its business name, "doing business as" name, or division name (whichever is shown on the contract), or has transferred the assets used in performing the contract, but has not completed the necessary requirements regarding novation and change-of-name agreements in FAR subpart 42.12, the Contractor shall provide the responsible Contracting Officer a minimum of one business day's written notification of its intention to (A) change the name in the CCR database; (B) comply with the requirements of subpart 42.12; and (C) agree in writing to the timeline and procedures specified by the responsible Contracting Officer. The Contractor must provide with the notification sufficient documentation to support the legally changed name.

(ii) If the Contractor fails to comply with the requirements of paragraph (t)(2)(i) of this clause, or fails to perform the agreement at paragraph (t)(2)(i)(C) of this clause, and, in the absence of a properly executed novation or change-of-name agreement, the CCR information that shows the Contractor to be other than the Contractor indicated in the contract will be considered to be incorrect information within the meaning of the "Suspension of Payment" paragraph of the electronic funds transfer (EFT) clause of this contract.

(3) The Contractor shall not change the name or address for EFT payments or manual payments, as appropriate, in the CCR record

VENDOR:

to reflect an assignee for the purpose of assignment of claims (see Subpart 32.8, Assignment of Claims). Assignees shall be separately registered in the CCR database. Information provided to the Contractor's CCR record that indicates payments, including those made by EFT, to an ultimate recipient other than that Contractor will be considered to be incorrect information within the meaning of the "Suspension of payment" paragraph of the EFT clause of this contract.

(4) Offerors and Contractors may obtain information on registration and annual confirmation requirements via the internet at http://www.ccr.gov or by calling 1-888-227-2423 or 269-961-5757.

52.212-5 CONTRACT TERMS AND CONDITIONS REQUIRED TO IMPLEMENT STATUTES OR EXECUTIVE ORDERS--COMMERCIAL ITEMS (JAN 2004)

(a) The Contractor shall comply with the following Federal Acquisition Regulation (FAR) clause, which is incorporated in this contract by reference, to implement provisions of law or Executive orders applicable to acquisitions of commercial items: 52.233-3, Protest after Award (AUG 1996) (31 U.S.C. 3553).

(b) The Contractor shall comply with the FAR clauses in this paragraph (b) that the Contracting Officer has indicated as being incorporated in this contract by reference to implement provisions of law or Executive orders applicable to acquisitions of commercial items: [Contracting Officer check as appropriate.]

___ (1) 52.203-6, Restrictions on Subcontractor Sales to the Government (JUL 1995), with Alternate I (OCT 1995) (41 U.S.C. 253g and 10 U.S.C. 2402).

___ (2) 52.219-3, Notice of Total HUBZone Set-Aside (JAN 1999) (15 U.S.C. 657a).

___ (3) 52.219-4, Notice of Price Evaluation Preference for HUBZone Small Business Concerns (JAN 1999) (if the offeror elects to waive the preference, it shall so indicate in its offer) (15 U.S.C. 657a).

___ (4) (i) 52.219-5, Very Small Business Set-Aside (JUNE 2003) (Pub. L. 103-403, section 304, Small Business Reauthorization and Amendments Act of 1994).

___ (ii) Alternate I (MAR 1999) of 52.219-5.

___ (iii) Alternate II (JUNE 2003) of 52.219-5.

___ (5) (i) 52.219-6, Notice of Total Small Business Set-Aside (JUNE 2003) (15 U.S.C. 644).

___ (ii) Alternate I (OCT 1995) of 52.219-6.

___ (6) (i) 52.219-7, Notice of Partial Small Business Set-Aside (JUNE 2003) (15 U.S.C. 644).

___ (ii) Alternate I (OCT 1995) of 52.219-7.

___ (7) 52.219-8, Utilization of Small Business Concerns (OCT 2000) (15 U.S.C. 637 (d)(2) and (3)).

___ (8) (i) 52.219-9, Small Business Subcontracting Plan (JAN 2002) (15 U.S.C. 637(d)(4)).

___ (ii) Alternate I (OCT 2001) of 52.219-9.

___ (iii) Alternate II (OCT 2001) of 52.219-9.

___ (9) 52.219-14, Limitations on Subcontracting (DEC 1996) (15 U.S.C. 637(a)(14)).

___ (10) (i) 52.219-23, Notice of Price Evaluation Adjustment for Small Disadvantaged Business Concerns (JUNE 2003) (Pub. L. 103-355, section 7102, and 10 U.S.C. 2323) (if the offeror elects to waive the adjustment, it shall so indicate in its offer).

___ (ii) Alternate I (JUNE 2003) of 52.219-23.

___ (11) 52.219-25, Small Disadvantaged Business Participation Program--Disadvantaged Status and Reporting (OCT 1999) (Pub. L. 103-355, section 7102, and 10 U.S.C. 2323).

___ (12) 52.219-26, Small Disadvantaged Business Participation

VENDOR:

Program--Incentive Subcontracting (OCT 2000) (Pub. L. 103-355, section 7102, and 10 U.S.C. 2323).

___ (13) 52.222-3, Convict Labor (JUNE 2003) (E.O. 11755).

___ (14) 52.222-19, Child Labor--Cooperation with Authorities and Remedies (JAN 2004) (E.O. 13126).

___ (15) 52.222-21, Prohibition of Segregated Facilities (FEB 1999).

___ (16) 52.222-26, Equal Opportunity (APR 2002) (E.O. 11246).

___ (17) 52.222-35, Equal Opportunity for Special Disabled Veterans, Veterans of the Vietnam Era, and Other Eligible Veterans (DEC 2001) (38 U.S.C. 4212).

___ (18) 52.222-36, Affirmative Action for Workers with Disabilities (JUN 1998) (29 U.S.C. 793).

___ (19) 52.222-37, Employment Reports on Special Disabled Veterans, Veterans of the Vietnam Era, and Other Eligible Veterans (DEC 2001) (38 U.S.C. 4212).

___ (20) (i) 52.223-9, Estimate of Percentage of Recovered Material Content for EPA-Designated Products (AUG 2000) (42 U.S.C. 6962(c)(3)(A)(ii)).

___ (ii) Alternate I (AUG 2000) of 52.223-9 (42 U.S.C. 6962(i)(2)(C)).

___ (21) 52.225-1, Buy American Act--Supplies (JUNE 2003) (41 U.S.C. 10a-10d).

___ (22) (i) 52.225-3, Buy American Act--Free Trade Agreements--Israeli Trade Act (JAN 2004)(41 U.S.C. 10a-10d, 19 U.S.C. 3301 note, 19 U.S.C. 2112 note), Pub. L. 108-77, 108-78).

___ (ii) Alternate I (JAN 2004) of 52.225-3.

___ (iii) Alternate II (JAN 2004) of 52.225-3.

___ (23) 52.225-5, Trade Agreements (JAN 2004) (19 U.S.C. 2501, et seq., 19 U.S.C. 3301 note).

___ (24) 52.225-13, Restrictions on Certain Foreign Purchases (OCT 2003) (E.o.s, proclamations, and statutes administered by the Office of Foreign Assets Control of the Department of the Treasury).

___ (25) 52.225-15, Sanctioned European Union Country End Products (FEB 2000) (E.O. 12849).

___ (26) 52.225-16, Sanctioned European Union Country Services (FEB 2000) (E.O. 12849).

___ (27) 52.232-29, Terms for Financing of Purchases of Commercial Items (FEB 2002) (41 U.S.C. 255(f), 10 U.S.C. 2307(f)).

___ (28) 52.232-30, Installment Payments for Commercial Items (OCT 1995) (41 U.S.C. 255(f), 10 U.S.C. 2307(f)).

___ (29) 52.232-33, Payment by Electronic Funds Transfer--Central Contractor Registration (OCT 2003) (31 U.S.C. 3332).

___ (30) 52.232-34, Payment by Electronic Funds Transfer--Other than Central Contractor Registration (MAY 1999) (31 U.S.C. 3332).

___ (31) 52.232-36, Payment by Third Party (MAY 1999) (31 U.S.C. 3332).

___ (32) 52.239-1, Privacy or Security Safeguards (AUG 1996) (5 U.S.C. 552a).

___ (33) (i) 52.247-64, Preference for Privately Owned U.S.-Flag Commercial Vessels (APR 2003) (46 U.S.C. Appx 1241 and 10 U.S.C. 2631).

___ (ii) Alternate I (APR 1984) of 52.247-64.

(c) The Contractor shall comply with the FAR clauses in this paragraph (c), applicable to commercial services, that the Contracting Officer has indicated as being incorporated in this contract by reference to implement provisions of law or Executive orders applicable to acquisitions of commercial items:

VENDOR:

[Contracting Officer check as appropriate.]

___ (1) 52.222-41, Service Contract Act of 1965, as Amended (MAY 1989) (41 U.S.C. 351, et seq.).

___ (2) 52.222-42, Statement of Equivalent Rates for Federal Hires (MAY 1989) (29 U.S.C. 206 and 41 U.S.C. 351, et seq.).

___ (3) 52.222-43, Fair Labor Standards Act and Service Contract Act--Price Adjustment (Multiple Year and Option Contracts) (MAY 1989) (29 U.S.C. 206 and 41 U.S.C. 351, et seq.).

___ (4) 52.222-44, Fair Labor Standards Act and Service Contract Act--Price Adjustment (February 2002) (29 U.S.C. 206 and 41 U.S.C. 351, et seq.).

___ (5) 52.222-47, SCA Minimum Wages and Fringe Benefits Applicable to Successor Contract Pursuant to PreDecemberessor Contractor Collective Bargaining Agreements (CBA) (May 1989) (41 U.S.C. 351, et seq.).

(d) Comptroller General Examination of Record. The Contractor shall comply with the provisions of this paragraph (d) if this contract was awarded using other than sealed bid, is in excess of the simplified acquisition threshold, and does not contain the clause at 52.215-2, Audit and Records--Negotiation.

(1) The Comptroller General of the United States, or an authorized representative of the Comptroller General, shall have access to and right to examine any of the Contractor's directly pertinent records involving transactions related to this contract.

(2) The Contractor shall make available at its offices at all reasonable times the records, materials, and other evidence for examination, audit, or reproduction, until 3 years after final payment under this contract or for any shorter period specified in FAR Subpart 4.7, Contractor Records Retention, of the other clauses of this contract. If this contract is completely or partially terminated, the records relating to the work terminated shall be made available for 3 years after any resulting final termination settlement. Records relating to appeals under the disputes clause or to litigation or the settlement of claims arising under or relating to this contract shall be made available until such appeals, litigation, or claims are finally resolved.

(3) As used in this clause, records include books, documents, accounting procedures and practices, and other data, regardless of type and regardless of form. This does not require the Contractor to create or maintain any record that the Contractor does not maintain in the ordinary course of business or pursuant to a provision of law.

(e)(1) Notwithstanding the requirements of the clauses in paragraphs (a), (b), (c), and (d) of this clause, the Contractor is not required to flow down any FAR clause, other than those in paragraphs (i) through (vi) of this paragraph in a subcontract for commercial items. Unless otherwise indicated below, the extent of the flow down shall be as required by the clause--

(i) 52.219-8, Utilization of Small Business Concerns (October 2000) (15 U.S.C. 637(d)(2) and (3)), in all subcontracts that offer further subcontracting opportunities. If the subcontract (except subcontracts to small business concerns) exceeds $500,000 ($1,000,000 for construction of any public facility), the subcontractor must include 52.219-8 in lower tier subcontracts that offer subcontracting opportunities.

(ii) 52.222-26, Equal Opportunity (April 2002) (E.O. 11246).

(iii) 52.222-35, Equal Opportunity for Special Disabled Veterans, Veterans of the Vietnam Era, and Other Eligible Veterans

VENDOR:

(December 2001) (38 U.S.C. 4212).
(iv) 52.222-36, Affirmative Action for Workers with Disabilities (June 1998) (29 U.S.C. 793).
(v) 52.222-41, Service Contract Act of 1965, as Amended (May 1989), flow down required for all subcontracts subject to the Service Contract Act of 1965 (41 U.S.C. 351, et seq.).
(vi) 52.247-64, Preference for Privately Owned U.S.-Flag Commercial Vessels (April 2003) (46 U.S.C. Appx 1241 and 10 U.S.C. 2631). Flow down required in accordance with paragraph (d) of FAR clause 52.247-64.
(2) While not required, the contractor May include in its subcontracts for commercial items a minimal number of additional clauses necessary to satisfy its contractual obligations.

252.212-7001 CONTRACT TERMS AND CONDITIONS REQUIRED TO IMPLEMENT STATUTES OR EXECUTIVE ORDERS APPLICABLE TO DEFENSE ACQUISITIONS OF COMMERCIAL ITEMS (JAN 2004)

(a) The contractor agrees to comply with the following Federal Acquisition Regulation (FAR) clause which, if checked, is included in this contract by reference to implement a provision of law applicable to acquisitions of commercial items or components.

___ 52.203-3 Gratuities (APR 1984) (10 U.S.C. 2207)

(b) The Contractor agrees to comply with any clause that is checked on the following list of Defense FAR Supplement clauses which, if checked, is included in this contract by reference to implement provisions of law or Executive orders applicable to acquisitions of commercial items or components.

___ 252.205-7000 Provision of Information to Cooperative Agreement Holders (DEC 1991) (10 U.S.C. 2416).
___ 252.219-7003 Small Disadvantaged and Women-Owned Small Business Subcontracting Plan (DoD Contracts) (APR 1996) (15 U.S.C. 637).
___ 252.219-7004 Small, Small Disadvantaged and Women-Owned Small Business Subcontracting Plan (Test Program) (JUN 1997) (15 U.S.C. 637 Note).
___ 252.225-7001 Buy American Act and Balance of Payments Program (APR 2003) (41 U.S.C. 10a-10d, E.O. 10582).
___ 252.225-7012 Preference for Certain Domestic Commodities (FEB 2003) (10 U.S.C. 2533a).
___ 252.225-7014 Preference for Domestic Specialty Metals (APR 2003) (10 U.S.C. 2533a).
___ 252.225-7015 Restriction on Acquisition of Hand or Measuring Tools (APR 2003) (10 U.S.C. 2533a).
___ 252.225-7016 Restriction on Acquisition of Ball and Roller Bearings (APR 2003) (___ Alternate I) (APR 2003) (10 U.S.C. 2534 and Section 8099 of Pub. L. 104-61) and similar sections in subsequent DoD appropriations acts).
___ 252.225-7021 Trade Agreements (JAN 2004) (19 U.S.C. 2501-2518 and 19 U.S.C. 3301 note).
___ 252.225-7027 Restriction on Contingent Fees for Foreign Military Sales (APR 2003) (22 U.S.C. 2779).
___ 252.225-7028 Exclusionary Policies and Practices of Foreign Governments (APR 2003) (22 U.S.C. 2755).
___ 252.225-7036 Buy American Act--Free Trade Agreements--Balance of Payments Program (JAN 2004) (___ Alternate I) (JAN 2004) (41 U.S.C. 10a-10d and 19 U.S.C. 3301 note).
___ 252.225-7038 Restriction on Acquisition of Air Circuit Breakers (APR 2003) (10 U.S.C. 2534(a)(3)).
___ 252.226-7001 Utilization of Indian Organizations,

VENDOR:

Indian-Owned Economic Enterprises, and Native Hawaiian Small Business Concerns (OCT 2003) (Section 8021 of Pub. L. 107-248).
___ 252.227-7015 Technical Data--Commercial Items (NOV 1995) (10 U.S.C. 2320).
___ 252.227-7037 Validation of Restrictive Markings on Technical Data (SEP 1999) (10 U.S.C. 2321).
___ 252.232-7003 Electronic Submission of Payment Requests (DEC 2003) (10 U.S.C. 2227)
___ 252.243-7002 Requests for Equitable Adjustment (MAR 1998) (10 U.S.C. 2410).
___ 252.247-7023 Transportation of Supplies by Sea (MAY 2002) (___Alternate I) (MAR 2000) (___Alternate II) (MAR 2000) (Alternate III) (MAY 2002) (10 U.S.C. 2631).
___ 252.247-7024 Notification of Transportation of Supplies by Sea (MAR 2000) (10 U.S.C. 2631).

(c) In addition to the clauses listed in paragraph (e) of the Contract Terms and Conditions Required to Implement Statutes or Executive Orders--Commercial Items clause of this contract (FAR 52.212-5), the Contractor shall include the terms of the following clauses, if applicable, in subcontracts for commercial items or commercial components, awarded at any tier under this contract:

252.225-7014 Preference for Domestic Specialty Metals, Alternate I (APR 2003) (10 U.S.C. 2533a).
252.247-7023 Transportation of Supplies by Sea (MAY 2002) (10 U.S.C. 2631)
252.247-7024 Notification of Transportation of Supplies by Sea (MAR 2000) (10 U.S.C. 2631).

52.212-1 INSTRUCTIONS TO OFFERORS--COMMERCIAL ITEMS (JAN 2004)

(a) North American Industry Classification System (NAICS) code and small business size standard. The NAICS code and small business size standard for this acquisition appear in Block 10 of the solicitation cover sheet (SF 1449). However, the small business size standard for a concern which submits an offer in its own name, but which proposes to furnish an item which it did not itself manufacture, is 500 employees.

(b) Submission of offers. Submit signed and dated offers to the office specified in this solicitation at or before the exact time specified in this solicitation. Offers may be submitted on the SF 1449, letterhead stationery, or as otherwise specified in the solicitation. As a minimum, offers must show--

(1) The solicitation number;
(2) The time specified in the solicitation for receipt of offers;
(3) The name, address, and telephone number of the offeror;
(4) A technical description of the items being offered in sufficient detail to evaluate compliance with the requirements in the solicitation. This may include product literature, or other documents, if necessary;
(5) Terms of any express warranty;
(6) Price and any discount terms;
(7) "Remit to" address, if different than mailing address;
(8) A completed copy of the representations and certifications at FAR 52.212-3;
(9) Acknowledgment of Solicitation Amendments;
(10) Past performance information, when included as an evaluation factor, to include recent and relevant contracts for

VENDOR:

the same or similar items and other references (including contract numbers, points of contact with telephone numbers and other relevant information); and

(11) If the offer is not submitted on the SF 1449, include a statement specifying the extent of agreement with all terms, conditions, and provisions included in the solicitation. Offers that fail to furnish required representations or information, or reject the terms and conditions of the solicitation may be excluded from consideration.

(c) Period for acceptance of offers. The offeror agrees to hold the prices in its offer firm for 30 calendar days from the date specified for receipt of offers, unless another time period is specified in an addendum to the solicitation.

(d) Product samples. When required by the solicitation, product samples shall be submitted at or prior to the time specified for receipt of offers. Unless otherwise specified in this solicitation, these samples shall be submitted at no expense to the Government, and returned at the sender's request and expense, unless they are destroyed during preaward testing.

(e) Multiple offers. Offerors are encouraged to submit multiple offers presenting alternative terms and conditions or commercial items for satisfying the requirements of this solicitation. Each offer submitted will be evaluated separately.

(f) Late submissions, modifications, revisions, and withdrawals of offers. (1) Offerors are responsible for submitting offers, and any modifications, revisions, or withdrawals, so as to reach the Government office designated in the solicitation by the time specified in the solicitation. If no time is specified in the solicitation, the time for receipt is 4:30 p.m., local time, for the designated Government office on the date that offers or revisions are due.

(2)(i) Any offer, modification, revision, or withdrawal of an offer received at the Government office designated in the solicitation after the exact time specified for receipt of offers is "late" and will not be considered unless it is received before award is made, the Contracting Officer determines that accepting the late offer would not unduly delay the acquisition; and--

(A) If it was transmitted through an electronic commerce method authorized by the solicitation, it was received at the initial point of entry to the Government infrastructure not later than 5:00 p.m. one working day prior to the date specified for receipt of offers; or

(B) There is acceptable evidence to establish that it was received at the Government installation designated for receipt of offers and was under the Government's control prior to the time set for receipt of offers; or

(C) If this solicitation is a request for proposals, it was the only proposal received.

(ii) However, a late modification of an otherwise successful offer, that makes its terms more favorable to the Government, will be considered at any time it is received and may be accepted.

(3) Acceptable evidence to establish the time of receipt at the Government installation includes the time/date stamp of that installation on the offer wrapper, other documentary evidence of receipt maintained by the installation, or oral testimony or statements of Government personnel.

(4) If an emergency or unanticipated event interrupts normal Government processes so that offers cannot be received at the Government office designated for receipt of offers by

VENDOR:

the exact time specified in the solicitation, and urgent Government requirements preclude amendment of the solicitation or other notice of an extension of the closing date, the time specified for receipt of offers will be deemed to be extended to the same time of day specified in the solicitation on the first work day on which normal Government processes resume.

(5) Offers may be withdrawn by written notice received at any time before the exact time set for receipt of offers. Oral offers in response to oral solicitations may be withdrawn orally. If the solicitation authorizes facsimile offers, offers may be withdrawn via facsimile received at any time before the exact time set for receipt of offers, subject to the conditions specified in the solicitation concerning facsimile offers. An offer may be withdrawn in person by an offeror or its authorized representative if, before the exact time set for receipt of offers, the identity of the person requesting withdrawal is established and the person signs a receipt for the offer.

(g) Contract award (not applicable to Invitation for Bids). The Government intends to evaluate offers and award a contract without discussions with offerors. Therefore, the offeror's initial offer should contain the offeror's best terms from a price and technical standpoint. However, the Government reserves the right to conduct discussions if later determined by the Contracting Officer to be necessary. The Government may reject any or all offers if such action is in the public interest; accept other than the lowest offer; and waive informalities and minor irregularities in offers received.

(h) Multiple awards. The Government may accept any item or group of items of an offer, unless the offeror qualifies the offer by specific limitations. Unless otherwise provided in the Schedule, offers may not be submitted for quantities less than those specified. The Government reserves the right to make an award on any item for a quantity less than the quantity offered, at the unit prices offered, unless the offeror specifies otherwise in the offer.

(i) Availability of requirements documents cited in the solicitation. (1)(i) The GSA Index of Federal Specifications, Standards and Commercial Item Descriptions, FPMR Part 101-29, and copies of specifications, standards, and commercial item descriptions cited in this solicitation may be obtained for a fee by submitting a request to--

GSA Federal Supply Service Specifications Section
Suite 8100
470 East L'Enfant Plaza, SW
Washington, DC 20407

Telephone (202) 619-8925
Facsimile (202) 619-8978.

(ii) If the General Services Administration, Department of Agriculture, or Department of Veterans Affairs issued this solicitation, a single copy of specifications, standards, and commercial item descriptions cited in this solicitation may be obtained free of charge by submitting a request to the addressee in paragraph (i)(1)(i) of this provision. Additional copies will be issued for a fee.

(2) The DoD Index of Specifications and Standards (DoDISS) and documents listed in it may be obtained from the--

Department of Defense Single Stock Point (DoDSSP)
Building 4, Section D

VENDOR:

700 Robbins Avenue
Philadelphia, PA 19111-5094

Telephone (215) 697-2667/2179
Facsimile (215) 697-1462.

(i) Automatic distribution may be obtained on a subscription basis.

(ii) Order forms, pricing information, and customer support information may be obtained--

(A) By telephone at (215) 697-2667/2179; or

(B) Through the DoDSSP Internet site at http://dodssp.daps.mil.

(3) Nongovernment (voluntary) standards must be obtained from the organization responsible for their preparation, publication, or maintenance.

(j) Data Universal Numbering System (DUNS) Number. (Applies to all offers exceeding $25,000, and offers of $25,000 or less if the solicitation requires the Contractor to be registered in the Central Contractor Registration (CCR) database. The offeror shall enter, in the block with its name and address on the cover page of its offer, the annotation "DUNS" or "DUNS +4" followed by the DUNS or DUNS +4 number that identifies the offeror's name and address. The DUNS +4 is the DUNS number plus a 4-character suffix that may be assigned at the discretion of the offeror to establish additional CCR records for identifying alternative Electronic Funds Transfer (EFT) accounts (see FAR Subpart 32.11) for the same parent concern. If the offeror does not have a DUNS number, it should contact Dun and Bradstreet directly to obtain one. An offeror within the United States may contact Dun and Bradstreet by calling 1-866-705-5711 or via the internet at http://www.dnb.com. An offeror located outside the United States must contact the local Dun and Bradstreet office for a DUNS number.

(k) Central Contractor Registration. Unless exempted by an addendum to this solicitation, by submission of an offer, the offeror acknowledges the requirement that a prospective awardee shall be registered in the CCR database prior to award, during performance and through final payment of any contract resulting from this solicitation. If the Offeror does not become registered in the CCR database in the time prescribed by the Contracting Officer, the Contracting Officer will proceed to award to the next otherwise successful registered Offeror. Offerors may obtain information on registration and annual confirmation requirements via the Internet at http://www.ccr.gov or by calling 1-888-227-2423 or 269-961-5757.

(l) Debriefing. If a post-award debriefing is given to requesting offerors, the Government shall disclose the following information, if applicable:

(1) The agency's evaluation of the significant weak or deficient factors in the debriefed offeror's offer.

(2) The overall evaluated cost or price and technical rating of the successful and the debriefed offeror and past performance information on the debriefed offeror.

(3) The overall ranking of all offerors, when any ranking was developed by the agency during source selection.

(4) A summary of the rationale for award;

(5) For acquisitions of commercial items, the make and model of the item to be delivered by the successful offeror.

(6) Reasonable responses to relevant questions posed by the debriefed offeror as to whether source-selection procedures set forth in the solicitation, applicable regulations, and other applicable authorities were followed by the agency.

VENDOR:

52.212-3 OFFEROR REPRESENTATIONS AND CERTIFICATIONS-COMMERCIAL ITEMS (JAN 2004)--ALTERNATE I (APR 2002)

(a) Definitions. As used in this provision:

"Emerging small business" means a small business concern whose size is no greater than 50 percent of the numerical size standard for the NAICS code designated.

"Forced or indentured child labor" means all work or service--

(1) Exacted from any person under the age of 18 under the menace of any penalty for its nonperformance and for which the worker does not offer himself voluntarily; or

(2) Performed by any person under the age of 18 pursuant to a contract the enforcement of which can be accomplished by process or penalties.

"Service-disabled veteran-owned small business concern"--

(1) Means a small business concern--

(i) Not less than 51 percent of which is owned by one or more service--disabled veterans or, in the case of any publicly owned business, not less than 51 percent of the stock of which is owned by one or more service-disabled veterans; and

(ii) The management and daily business operations of which are controlled by one or more service-disabled veterans or, in the case of a veteran with permanent and severe disability, the spouse or permanent caregiver of such veteran.

(2) Service-disabled veteran means a veteran, as defined in 38 U.S.C. 101(2), with a disability that is service-connected, as defined in 38 U.S.C. 101(16).

"Small business concern" means a concern, including its affiliates, that is independently owned and operated, not dominant in the field of operation in which it is bidding on Government contracts, and qualified as a small business under the criteria in 13 CFR part 121 and size standards in this solicitation.

"Veteran-owned small business concern" means a small business concern--

(1) Not less than 51 percent of which is owned by one or more veterans (as defined at 38 U.S.C. 101(2)) or, in the case of any publicly owned business, not less than 51 percent of the stock of which is owned by one or more veterans; and

(2) The management and daily business operations of which are controlled by one or more veterans.

"Women-owned small business concern" means a small business concern--

(1) That is at least 51 percent owned by one or more women; or, in the case of any publicly owned business, at least 51 percent of the stock of which is owned by one or more women; and

(2) Whose management and daily business operations are controlled by one or more women.

"Women-owned business concern" means a concern which is at least 51 percent owned by one or more women; or in the case of any publicly owned business, at least 51 percent of its stock is owned by one or more women; and whose management and daily business operations are controlled by one or more women.

(b) Taxpayer Identification Number (TIN) (26 U.S.C. 6109, 31 U.S.C. 7701). (Not applicable if the offeror is required to provide this information to a central contractor registration database to be eligible for award.)

(1) All offerors must submit the information required in paragraphs (b)(3) through (b)(5) of this provision to comply

VENDOR:

with debt collection requirements of 31 U.S.C. 7701(c) and 3325(d), reporting requirements of 26 U.S.C. 6041, 6041A, and 6050M, and implementing regulations issued by the Internal Revenue Service (IRS).

(2) The TIN may be used by the Government to collect and report on any delinquent amounts arising out of the offeror's relationship with the Government (31 U.S.C. 7701(c)(3)). If the resulting contract is subject to the payment reporting requirements described in FAR 4.904, the TIN provided hereunder may be matched with IRS records to verify the accuracy of the offeror's TIN.

(3) Taxpayer Identification Number (TIN).

[ ] TIN: _____.
[ ] TIN has been applied for.
[ ] TIN is not required because:
[ ] Offeror is a nonresident alien, foreign corporation, or foreign partnership that does not have income effectively connected with the conduct of a trade or business in the United States and does not have an office or place of business or a fiscal paying agent in the United States;
[ ] Offeror is an agency or instrumentality of a foreign government;
[ ] Offeror is an agency or instrumentality of the Federal Government.

(4) Type of organization.
[ ] Sole proprietorship;
[ ] Partnership;
[ ] Corporate entity (not tax-exempt);
[ ] Corporate entity (tax-exempt);
[ ] Government entity (Federal, State, or local);
[ ] Foreign government;
[ ] International organization per 26 CFR 1.6049-4;
[ ] Other _____.

(5) Common parent.
[ ] Offeror is not owned or controlled by a common parent;
[ ] Name and TIN of common parent:
Name _____.
TIN _____.

(c) Offerors must complete the following representations when the resulting contract will be performed in the United States or its outlying areas. Check all that apply.

(1) Small business concern. The offeror represents as part of its offer that it [ ] is, [ ] is not a small business concern.

(2) Veteran-owned small business concern. [Complete only if the offeror represented itself as a small business concern in paragraph (c)(1) of this provision.] The offeror represents as part of its offer that it [ ] is, [ ] is not a veteran-owned small business concern.

(3) Service-disabled veteran-owned small business concern. [Complete only if the offeror represented itself as a veteran-owned small business concern in paragraph (c)(2) of this provision.] The offeror represents as part of its offer that it [ ] is, [ ] is not a service-disabled veteran-owned small business concern.

(4) Small disadvantaged business concern. [Complete only if the offeror represented itself as a small business concern in paragraph (c)(1) of this provision.] The offeror represents, for general statistical purposes, that it [ ] is, [ ] is not a small disadvantaged business concern as defined in 13 CFR 124.1002.

(5) Women-owned small business concern. [Complete only if the offeror represented itself as a small business concern in paragraph (c)(1) of this provision.] The offeror represents that it [ ] is,

VENDOR:

[ ] is not a women-owned small business concern. Note: Complete paragraphs (c)(6) and (c)(7) only if this solicitation is expected to exceed the simplified acquisition threshold.

(6) Women-owned business concern (other than small business concern). [Complete only if the offeror is a women-owned business concern and did not represent itself as a small business concern in paragraph (c)(1) of this provision.] The offeror represents that it [ ] is a women-owned business concern.

(7) Tie bid priority for labor surplus area concerns. If this is an invitation for bid, small business offerors may identify the labor surplus areas in which costs to be incurred on account of manufacturing or production (by offeror or first-tier subcontractors) amount to more than 50 percent of the contract price:

_____

(8) Small Business Size for the Small Business Competitiveness Demonstration Program and for the Targeted Industry Categories under the Small Business Competitiveness Demonstration Program. [Complete only if the offeror has represented itself to be a small business concern under the size standards for this solicitation.]

(i) (Complete only for solicitations indicated in an addendum as being set-aside for emerging small businesses in one of the four designated industry groups (DIGs).) The offeror represents as part of its offer that it [ ] is, [ ] is not an emerging small business.

(ii) (Complete only for solicitations indicated in an addendum as being for one of the targeted industry categories (TICs) or four designated industry groups (DIGs).) Offeror represents as follows:

(A) Offeror's number of employees for the past 12 months (check the Employees column if size standard stated in the solicitation is expressed in terms of number of employees); or

(B) Offeror's average annual gross revenue for the last 3 fiscal years (check the Average Annual Gross Number of Revenues column if size standard stated in the solicitation is expressed in terms of annual receipts).

(Check one of the following):

Number of Employees	Average Annual Gross Revenues
____ 50 or fewer	____ $1 million or less
____ 51--100	____ $1,000,001--$2 million
____ 101--250	____ $2,000,001--$3.5 million
____ 251--500	____ $3,500,001--$5 million
____ 501--750	____ $5,000,001--$10 million
____ 751--1,000	____ $10,000,001--$17 million
____ Over 1,000	____ Over $17 million

(9) (Complete only if the solicitation contains the clause at FAR 52.219-23, Notice of Price Evaluation Adjustment for Small Disadvantaged Business Concerns, or FAR 52.219-25, Small Disadvantaged Business Participation Program--Disadvantaged Status and Reporting, and the offeror desires a benefit based on its disadvantaged status.)

(i) General. The offeror represents that either--

(A) It [ ] is, [ ] is not certified by the Small Business Administration as a small disadvantaged business concern and identified, on the date of this representation, as

VENDOR:

a certified small disadvantaged business concern in the database maintained by the Small Business Administration (PRO-Net), and that no material change in disadvantaged ownership and control has occurred since its certification, and, where the concern is owned by one or more individuals claiming disadvantaged status, the net worth of each individual upon whom the certification is based does not exceed $750,000 after taking into account the applicable exclusions set forth at 13 CFR 124.104(c)(2); or

(B) It [ ] has, [ ] has not submitted a completed application to the Small Business Administration or a Private Certifier to be certified as a small disadvantaged business concern in accordance with 13 CFR 124, Subpart B, and a decision on that application is pending, and that no material change in disadvantaged ownership and control has occurred since its application was submitted.

(ii) [ ] Joint Ventures under the Price Evaluation Adjustment for Small Disadvantaged Business Concerns. The offeror represents, as part of its offer, that it is a joint venture that complies with the requirements in 13 CFR 124. 1002(f) and that the representation in paragraph (c)(9)(i) of this provision is accurate for the small disadvantaged business concern that is participating in the joint venture. [The offeror shall enter the name of the small disadvantaged business concern that is participating in the joint venture:_____.]

(10) HUBZone small business concern. [Complete only if the offeror represented itself as a small business concern in paragraph (c)(1) of this provision.] The offeror represents, as part of its offer, that--

(i) It [ ] is, [ ] is not a HUBZone small business concern listed, on the date of this representation, on the List of Qualified HUBZone Small Business Concerns maintained by the Small Business Administration, and no material change in ownership and control, principal office, or HUBZone employee percentage has occurred since it was certified by the Small Business Administration in accordance with 13 CFR part 126; and

(ii) It [ ] is, [ ] is not a joint venture that complies with the requirements of 13 CFR part 126, and the representation in paragraph (c)(10)(i) of this provision is accurate for the HUBZone small business concern or concerns that are participating in the joint venture. [The offeror shall enter the name or names of the HUBZone small business concern or concerns that are participating in the joint venture:_____.] Each HUBZone small business concern participating in the joint venture shall submit a separate signed copy of the HUBZone representation.

(11) (Complete if the offeror has represented itself as disadvantaged in paragraph (c)(4) or (c)(9) of this provision.) The offeror shall check the category in which its ownership falls:

____ Black American.

____ Hispanic American.

____ Native American (American Indians, Eskimos, Aleuts, or Native Hawaiians).

____ Asian-Pacific American (persons with origins from Burma, Thailand, Malaysia, Indonesia, Singapore, Brunei, Japan, China, Taiwan, Laos, Cambodia (Kampuchea), Vietnam, Korea, The Philippines, U.S. Trust Territory or the Pacific Islands (Republic of Palau), Republic of the Marshall Islands, Federated States of Micronesia, the Commonwealth of the Northern Mariana Islands, Guam, Samoa, Macao, Hong Kong, Fiji, Tonga, Kiribati, Tuvalu, or Nauru).

____ Subcontinent Asian (Asian-Indian) American (persons with origins from India, Pakistan, Bangladesh, Sri Lanka, Bhutan,

VENDOR:

the Maldives Islands, or Nepal).

____ Individual/concern, other than one of the preceding.

(11) HUBZone small business concern. [Complete only if the offeror represented itself as a small business concern in paragraph (c)(1) of this provision.] The offeror represents as part of its offer that-

(i) It [ ] is, [ ] is not a HUBZone small business concern listed, on the date of this representation, on the List of Qualified HUBZone Small Business Concerns Maintained by the Small Business Administration, and no material change in ownership and control, principal place of ownership, or HUBZone employee percentage has occurred since it was certified by the Small Business Administration in accordance with 13 CFR part 126; and

(ii) It [ ] is, [ ] is not a joint venture that complies with the requirements of 13 CFR part 126, and the representation in paragraph (c)(11)(i) of this provision is accurate for the HUBZone small business concern or concerns that are participating on the joint venture. [The offeror shall enter the name or names of the HUBZone small business concern or concerns that are participating in the joint venture: _____.] Each HUBZone small business concern participating in the joint venture shall submit a separate signed copy of the HUBZone representation.

(d) Representations required to implement provisions of Executive Order 11246--

(1) Previous contracts and compliance. The offeror represents that--

(i) It [ ] has, [ ] has not participated in a previous contract or subcontract subject to the Equal Opportunity clause of this solicitation; and

(ii) It [ ] has, [ ] has not filed all required compliance reports.

(2) Affirmative Action Compliance. The offeror represents that--

(i) It [ ] has developed and has on file, [ ] has not developed and does not have on file, at each establishment, affirmative action programs required by rules and regulations of the Secretary of Labor (41 CFR parts 60-1 and 60-2), or

(ii) It [ ] has not previously had contracts subject to the written affirmative action programs requirement of the rules and regulations of the Secretary of Labor.

(e) Certification Regarding Payments to Influence Federal Transactions (31 U.S.C. 1352). (Applies only if the contract is expected to exceed $100,000.) By submission of its offer, the offeror certifies to the best of its knowledge and belief that no Federal appropriated funds have been paid or will be paid to any person for influencing or attempting to influence an officer or employee of any agency, a Member of Congress, an officer or employee of Congress or an employee of a Member of Congress on his or her behalf in connection with the award of any resultant contract.

(f) Buy American Act Certificate. (Applies only if the clause at Federal Acquisition Regulation (FAR) 52.225-1, Buy American Act--Supplies, is included in this solicitation.)

(1) The offeror certifies that each end product, except those listed in paragraph (f)(2) of this provision, is a domestic end product and that the offeror has considered components of unknown origin to have been mined, produced, or manufactured outside the United States. The offeror shall list as foreign end products those end products manufactured in the United States that do not qualify as domestic end products. The terms "component," "domestic end product," "end product," "foreign end product," and "United

VENDOR:

States" are defined in the clause of this solicitation entitled "Buy American Act--Supplies."

(2) Foreign End Products:

Line Item No	Country of Origin
_____	_____
_____	_____
_____	_____

(List as necessary)

(3) The Government will evaluate offers in accordance with the policies and procedures of FAR Part 25.

(g)(1) Buy American Act--Free Trade Agreements--Israeli Trade Act Program Certificate. (Applies only if the clause at FAR 52.225-3, Buy American Act--Free Trade Agreements--Israeli Trade Act, is included in this solicitation.)

(i) The offeror certifies that each end product, except those listed in paragraph (g)(1)(ii) or (g)(1)(iii) of this provision, is a domestic end product and that the offeror has considered components of unknown origin to have been mined, produced, or manufactured outside the United States. The terms "component," "domestic end product," "end product," "foreign end product," and "United States" are defined in the clause of this solicitation entitled "Buy American Act--Free Trade Agreements--Israeli Trade Act."

(ii) The offeror certifies that the following supplies are FTA country end products or Israeli end products as defined in the clause of this solicitation entitled "Buy American Act--Free Trade Agreements--Israeli Trade Act":

FTA Country or Israeli End Products:

Line Item No	Country of Origin
_____	_____
_____	_____
_____	_____

(List as necessary)

(iii) The offeror shall list those supplies that are foreign end products (other than those listed in paragraph (g)(1)(ii) of this provision) as defined in the clause of this solicitation entitled "Buy American Act--Free Trade Agreements--Israeli Trade Act." The offeror shall list as other foreign end products those end products manufactured in the United States that do not qualify as domestic end products.

Other Foreign End Products:

Line Item No	Country of Origin
_____	_____
_____	_____
_____	_____

(List as necessary)

(iv) The Government will evaluate offers in accordance with the policies and procedures of FAR Part 25.

(2) Buy American Act--Free Trade Agreements--Israeli Trade Act Certificate, Alternate I (Jan 2004). If Alternate I to the clause at FAR 52.225-3 is included in this solicitation, substitute the following paragraph (g)(1)(ii) for paragraph (g)(1)(ii) of the basic provision:

(g)(1)(ii) The offeror certifies that the following supplies are Canadian end products as defined in the clause of this

VENDOR:

solicitation entitled "Buy American Act--Free Trade Agreements--Israeli Trade Act":

Canadian End Products:

Line Item No.

_____

_____

_____

(List as necessary)

(3) Buy American Act--Free Trade Agreements--Israeli Trade Act Certificate, Alternate II (Jan 2004). If Alternate II to the clause at FAR 52.225-3 is included in this solicitation, substitute the following paragraph (g)(1)(ii) for paragraph (g)(1)(ii) of the basic provision:

(g)(1)(ii) The offeror certifies that the following supplies are Canadian end products or Israeli end products as defined in the clause of this solicitation entitled "Buy American Act--Free Trade Agreements--Israeli Trade Act":

Canadian or Israeli End Products:

Line Item No	Country of Origin

(List as necessary)

(4) Trade Agreements Certificate. (Applies only if the clause at FAR 52.225-5, Trade Agreements, is included in this solicitation.)

(i) The offeror certifies that each end product, except those listed in paragraph (g)(4)(ii) of this provision, is a U.S.-made, designated country, Caribbean Basin country, or FTA country end product, as defined in the clause of this solicitation entitled "Trade Agreements."

(ii) The offeror shall list as other end products those end products that are not U.S.-made, designated country, Caribbean Basin country, or FTA country end products.

Other End Products:

Line Item No	Country of Origin

(List as necessary)

(iii) The Government will evaluate offers in accordance with the policies and procedures of FAR Part 25. For line items subject to the Trade Agreements Act, the Government will evaluate offers of U.S.-made, designated country, Caribbean Basin country, or FTA country end products without regard to the restrictions of the Buy American Act. The Government will consider for award only offers of U.S.-made, designated country, Caribbean Basin country, or FTA country end products unless the Contracting Officer determines that there are no offers for such products or that the offers for such products are insufficient to fulfill the requirements of the solicitation.

(h) Certification Regarding Debarment, Suspension or Ineligibility for Award (Executive Order 12549). (Applies only if the contract value is expected to exceed the simplified acquisition

VENDOR:

threshold.) The offeror certifies, to the best of its knowledge and belief, that the offeror and/or any of its principals--

(1) [ ] Are, [ ] are not presently debarred, suspended, proposed for debarment, or declared ineligible for the award of contracts by any Federal agency;

(2) [ ] Have, [ ] have not, within a three-year period preceding this offer, been convicted of or had a civil judgment rendered against them for: commission of fraud or a criminal offense in connection with obtaining, attempting to obtain, or performing a Federal, state or local government contract or subcontract; violation of Federal or state antitrust statutes relating to the submission of offers; or commission of embezzlement, theft, forgery, bribery, falsification or destruction of records, making false statements, tax evasion, or receiving stolen property; and

(3) [ ] Are, [ ] are not presently indicted for, or otherwise criminally or civilly charged by a Government entity with, commission of any of these offenses.

(i) Certification Regarding Knowledge of Child Labor for Listed End Products (Executive Order 13126). [The Contracting Officer must list in paragraph (i)(1) any end products being acquired under this solicitation that are included in the List of Products Requiring Contractor Certification as to Forced or Indentured Child Labor, unless excluded at 22.1503(b).]

(1) Listed end products.

Listed End Product

_____

_____

Listed Countries of Origin

_____

_____

(2) Certification. [If the Contracting Officer has identified end products and countries of origin in paragraph (i)(1) of this provision, then the offeror must certify to either (i)(2)(i) or (i)(2)(ii) by checking the appropriate block.]

[ ] (i) The offeror will not supply any end product listed in paragraph (i)(1) of this provision that was mined, produced, or manufactured in the corresponding country as listed for that product.

[ ] (ii) The offeror may supply an end product listed in paragraph (i)(1) of this provision that was mined, produced, or manufactured in the corresponding country as listed for that product. The offeror certifies that it has made a good faith effort to determine whether forced or indentured child labor was used to mine, produce, or manufacture any such end product furnished under this contract. On the basis of those efforts, the offeror certifies that it is not aware of any such use of child labor.

(End of provision)

Your quotation must include the following information:

Price list number and date

or

Cost breakdown by direct labor (list categories, hours

VENDOR:

and pay rates). In addition to the direct rates, provide the applicable indirect information (G&A), overhead, facilities capital cost of money (FCCM) and profit.

or

Applicable General Services Administration (GSA) contract number.

If unable to quote FOB, Destination, please complete the following:

FOB Point _____

Estimated Shipping Charge _____

Business size:

Large _____ Small _____ Nonprofit _____

Cage Code _____

Tax Identification Number (TIN) _____

DUNNS _____

ELIGIBILITY REQUIREMENTS

All contractors and individuals doing business with the Federal Government must be registered at the Contractor Central Registration Database located at:
http:ccr.dlsc.dla.mil/.

ELECTRONIC DISTRIBUTION OF CONTRACT DOCUMENTS

All contract award and contract modification documents will be distributed electronically using the Navy Air Force Interface (NAFI) system. The contractor's copy will be provided in portable document format (pdf) as an attachment to an e-mail that will be sent to the contractor by the NAFI system. A pdf file may be accessed using Adobe Acrobat Reader software. This is a free software that may be downloaded at:
http://www.adobe.com/products/acrobat/readstep.html

Provide the following information that will be used to make electronic distribution for any resultant contract:

Name of Point of Contact to Receive Distribution _____

Phone Number for Point of Contact _____

E-Mail Address for Receipt of Distribution _____

USE OF THE GOVERNMENTWIDE COMMERCIAL PURCHASE CARD

VENDOR:

Will you accept the Governmentwide Commercial Purchase Card as a method of purchasing supplies and/or services.

_____Yes _____ No

Will you accept the Governmentwide Commercial Purchase Card as a method of payment for your invoice.

_____Yes _____ No

DUTY FREE ENTRY

Will any materials being shipped to the Government require a duty-free entry certificate for foreign supplies.

_____Yes _____ No

If yes, please include dollar amount $_____

FIGURE #1:

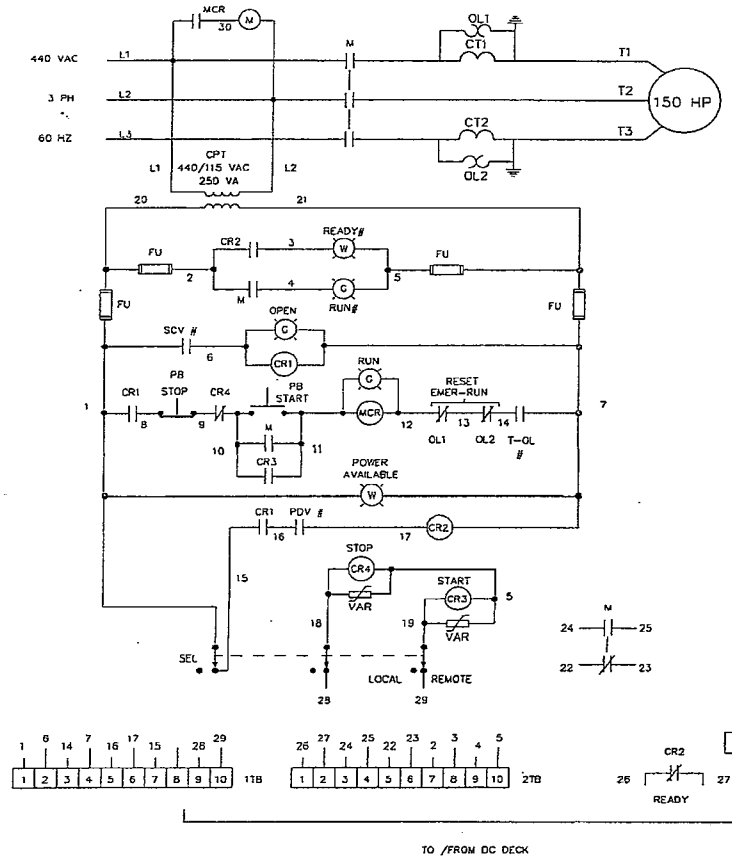

NOMENCLATURE

CPT	– CONTROL POWER TRANSFORMER
CR	– CONTROL RELAY
FU	– FUSE
IL	– INDICATING LIGHT
L1–3	– INCOMING POWER LEADS
M	– LINE CONTACTOR
OL	– OVERLOAD RELAY
PB	– PUSHBUTTON
PDV	– PUMP DISCHARGE VALVE
SCV	– SEA CHEST VALVE
SEL	– SELECTOR SWITCH
T1–3	– OUTGOING MOTOR LEADS
TB	– TERMINAL BOARD
VAR	– VARISTOR
#	– REMOTE DEVICE

NOTE: PROVIDE 12 VA BETWEEN TERMINALS 1 AND 4 OF 1TB. T-OL IS MOTOGARD SERIES 145 AND IS POWERED BY TERMINAL 1 AND 4 OF 1TB. CONTACT CLOSES WHEN CONTROL POWER IS APPLIED.

SCHEMATIC 22
FOR ITEM 22

CONTRACT DATA REQUIREMENTS LIST
(2 Data Items)

Form Approved
OMB No. 0704-0188

The public reporting burden for this collection of information is estimated to average 220 hours per response, including the time for reviewing instructions, searching existing data sources, gathering and maintaining the data needed, and completing and reviewing the collection of information. Send comments regarding this burden estimate or any other aspect of this collection of information, including suggestions for reducing the burden, to Department of Defense, Washington Headquarters Services, Directorate for Information Operations and Reports (0704-0188), 1215 Jefferson Davis Highway, Suite 1204, Arlington, VA 22202-4302. Respondents should be aware that notwithstanding any other provision of law, no person shall be subject to any penalty for failing to comply with a collection of information if it does not display a currently valid OMB control number. Please DO NOT RETURN your form to the above address. Send completed form to the Government Issuing Contracting Officer for the Contract/PR No. listed in Block E.

A. CONTRACT LINE ITEM NO.	B. EXHIBIT	C. CATEGORY: TDP ____ TM ____ OTHER ____

D. SYSTEM/ITEM	E. CONTRACT/PR NO.	F. CONTRACTOR
150 HP VARIABLE SPEED DRIVE		

1. DATA ITEM NO.	2. TITLE OF DATA ITEM	3. SUBTITLE	17. PRICE GROUP
A001	EMI TEST REPORT		18. ESTIMATED TOTAL PRICE

4. AUTHORITY (Data Acquisition Document No.)	5. CONTRACT REFERENCE	6. REQUIRING OFFICE
DI-EMCS-80200B	CLIN 0002AA	NSWCCD

7. DD 250 REQ	9. DIST STATEMENT REQUIRED	10. FREQUENCY	12. DATE OF FIRST SUBMISSION
LT		ONCE	150 DARC
8. APP CODE		**11. AS OF DATE**	**13. DATE OF SUBSEQUENT SUBMISSION**
A			

16. REMARKS

14. DISTRIBUTION

a. ADDRESSEE	b. COPIES Draft	Final Reg	Final Repro
NSWCCD 9344		1	2
15. TOTAL →	0	1	2

1. DATA ITEM NO.	2. TITLE OF DATA ITEM	3. SUBTITLE	17. PRICE GROUP
A002	INTERFACE REQUIREMENTS TEST REPORT		18. ESTIMATED TOTAL PRICE

4. AUTHORITY (Data Acquisition Document No.)	5. CONTRACT REFERENCE	6. REQUIRING OFFICE
DI-NDTI-8080B	CLIN 0002AB	NSWCCD

7. DD 250 REQ	9. DIST STATEMENT REQUIRED	10. FREQUENCY	12. DATE OF FIRST SUBMISSION
LT		ONCE	150 DAC
8. APP CODE		**11. AS OF DATE**	**13. DATE OF SUBSEQUENT SUBMISSION**
A			

16. REMARKS

14. DISTRIBUTION

a. ADDRESSEE	b. COPIES Draft	Final Reg	Final Repro
NSWCCD	0	1	2
15. TOTAL →	0	1	2

G. PREPARED BY	H. DATE	I. APPROVED BY	J. DATE
Jesse Schmeller	10 FEB 04	[illegible]	10 Feb 04

CONTRACT DATA REQUIREMENTS LIST
(2 Data Items)

Form Approved
OMB No. 0704-0188

The public reporting burden for this collection of information is estimated to average 220 hours per response, including the time for reviewing instructions, searching existing data sources, gathering and maintaining the data needed, and completing and reviewing the collection of information. Send comments regarding this burden estimate or any other aspect of this collection of information, including suggestions for reducing the burden, to Department of Defense, Washington Headquarters Services, Directorate for Information Operations and Reports (0704-0188), 1215 Jefferson Davis Highway, Suite 1204, Arlington, VA 22202-4302. Respondents should be aware that notwithstanding any other provision of law, no person shall be subject to any penalty for failing to comply with a collection of information if it does not display a currently valid OMB control number. Please DO NOT RETURN your form to the above address. Send completed form to the Government Issuing Contracting Officer for the Contract/PR No. listed in Block E.

A. CONTRACT LINE ITEM NO.	B. EXHIBIT	C. CATEGORY: TDP ____ TM ____ OTHER ____

D. SYSTEM/ITEM	E. CONTRACT/PR NO.	F. CONTRACTOR
150 HP VARIABLE SPEED DRIVE		

1. DATA ITEM NO.	2. TITLE OF DATA ITEM	3. SUBTITLE	17. PRICE GROUP
A003	TECHNICAL MANUAL		18. ESTIMATED TOTAL PRICE

4. AUTHORITY (Data Acquisition Document No.)	5. CONTRACT REFERENCE	6. REQUIRING OFFICE
	CLIN 0002AC	NSWCCD

7. DD 250 REQ	9. DIST STATEMENT REQUIRED	10. FREQUENCY	12. DATE OF FIRST SUBMISSION
LT		ONCE	150 DARC
8. APP CODE		**11. AS OF DATE**	**13. DATE OF SUBSEQUENT SUBMISSION**
A			

14. DISTRIBUTION

a. ADDRESSEE	b. COPIES Draft	Final Reg	Final Repro
NSWCCD 9344		1	2
15. TOTAL →	0	1	2

16. REMARKS

Item 4: Provide a technical manual that provides enough information for an operator to operate and maintain the variable speed drive system. Information that must be included is the following:

1. System drawings
2. Program listings
3. System operational manual
4. Maintenance and Service information

1. DATA ITEM NO.	2. TITLE OF DATA ITEM	3. SUBTITLE	17. PRICE GROUP
			18. ESTIMATED TOTAL PRICE

4. AUTHORITY (Data Acquisition Document No.)	5. CONTRACT REFERENCE	6. REQUIRING OFFICE

7. DD 250 REQ	9. DIST STATEMENT REQUIRED	10. FREQUENCY	12. DATE OF FIRST SUBMISSION
8. APP CODE		**11. AS OF DATE**	**13. DATE OF SUBSEQUENT SUBMISSION**

14. DISTRIBUTION

a. ADDRESSEE	b. COPIES Draft	Final Reg	Final Repro
15. TOTAL →			

16. REMARKS

G. PREPARED BY	H. DATE	I. APPROVED BY	J. DATE
Jesse Schmelle	10 FEB 04	William W. [illegible]	10 Feb 04

150 HP Variable Speed Drive Specification

1.0 VARIABLE SPEED DRIVE SYSTEM (VSDS) FOR 1000 GPM FIRE PUMPS

1.1 General

This specification establishes requirements for a Variable Speed Drive System (VSDS). This VSDS will be used to control a 150HP Fire Pump installed on DDG Class Ships.

The goal of this specification is to take a commercial off the shelf variable speed drive and develop and build a VSDS design that meets military technical requirements as set forth in this specification and is as small as possible. As part of the deliverables, an EMI test report will be provided by the offeror demonstrating that the VSDS design meets Mil-Std-461E for surface ships. In addition, a test report shall be provided by the offeror demonstrating that the VSDS design is capable of operating within the parameters established by Mil-Std-1399 300A.

The VSDS shall consist of one enclosure which shall contain all electrical and mechanical components required for control of the motor and pump. The system will have two modes of operation. In Automatic Mode the VSD's PID controller will be used to maintain the desired pressure setpoint. Process feedback and setpoints will be from separate 4-20mA signals. In Manual Mode the keypad will set the drive speed, and pressure will be maintained manually.

The load consists of an induction motor directly coupled to a centrifugal pump. The motor is constructed according to MIL-M-17060E. The motor can have either Class B or Class F insulation and is rated for 150 horsepower, 3600 RPM, at 50^0C. The pump load will range from 67 horsepower at 2800 RPM to 134 horsepower at 3580 RPM.

The VSDS is to use an active front end and is to be air cooled and must be able to operate in an ambient temperature of 50^0C.

2. APPLICABLE DOCUMENTS.

2.1 General. The documents listed in this section are specified in sections 3 and 4 of this specification. This section does not include documents cited in other sections of this specification or recommended for additional information or as examples. While every effort has been made to ensure the completeness of this list, document users are cautioned that they must meet all specified requirements of the documents cited in sections 3 and 4 of this specification.

2.2 Government Documents.

2.2 Government Documents.

2.2.1 Specifications, Standards and Handbooks. The following specifications and standards form a part of this document to the extent specified herein. Unless otherwise specified, the issues of these documents are those listed in the issue of the Department of Defense Index of Specifications and Standards (DoDISS) and supplements thereto, cited in the solicitation.

SPECIFICATIONS and STANDARDS

MIL-STD-889 1993	Dissimilar Metals
MIL-STD-810	Environmental Engineering Considerations and Laboratory Tests
MIL-DTL-2212 1997	Contactors and Controllers, Electric Motor AC or DC and Associated Switching Devices
MIL-STD-461 1999	Requirements for the Control of Electromagnetic Interference Emissions and Susceptibility
MIL-STD-882 2000	System Safety Program Requirements
MIL-STD-167-1 1987	Mechanical Vibrations of Shipboard Equipment (Type I – Environmental and Type II – Internally Excited)
MIL-STD-901 1989	Requirements for Shock Tests HI (High Impact); Shipboard Machinery, Equipment, and Systems
MIL-E-917 1993	Electric Power Equipment, Basic Requirements
MIL-STD-1310 1996	Standard Practice for Shipboard Bonding, Grounding and Other Techniques for Electromagnetic Compatibility and Safety
MIL-STD-1399, Section 300 1992	Interface Standard for Shipboard Systems, Electric Power, Alternating Current (Metric)
DOD-STD-1399, Section 301 1986	Interface Standard for Shipboard Systems, Ship Motion and Attitude (Metric)
MIL-STD-1472 1999	Human Engineering Design Criteria for Military Systems, Equipment and Facilities
MIL-E-2036 2001	Enclosures for Electric and Electronic Equipment
MIL-DTL-24643 2002	General Specification for Cables and Cords, Electric, Low Smoke, For Shipboard Use
MIL-DTL-15090 1996	Enamel, Equipment, Light Gray, (Navy Formula 111)
FED-STD-595/26307 1994	Gray, Semi-gloss

(Unless otherwise indicated, copies of the above specifications, standards and handbooks are available from the Standardization Document Order Desk, 700 Robbins Avenue, Building 4D, Philadelphia, PA 19111-5094 [www.dsp.dla.mil]).

2.3 **Non-government Publications.** The following documents form a part of this document to the extent specified herein. Unless otherwise specified, the issues of the documents, which are DoD-adopted, are those listed in the issue of the DoDISS cited in the solicitation. Unless otherwise specified, the issues of documents not listed in the DoDISS are the issues of the documents cited in the solicitation (please see 6.2).

NATIONAL ELECTRICAL MANUFACTURERS ASSOCIATION

NEMA 250 - 1997 Enclosures for Electrical Equipment (1000 Volts Maximum)

(Application for copies should be addressed to the National Electrical Manufacturers Association, 1300 North 17th Street, Suite 1847, Rosslyn, Virginia 22209 [www.nema.org].)

2.4 Order of Precedence. In the event of a conflict between the text of this document and the references cited herein (except for related associated specifications or specification sheets), the text of this document shall take precedence. Nothing in this document however, supersedes applicable laws or regulations unless a specific exemption shall have been obtained.

3. VSD SYSTEM GENERAL REQUIREMENTS

3.1 Mechanical Characteristics

3.1.1 Enclosure Requirements. The VSDS system components shall be mounted in a single enclosure not greater than 50,000in^3 and shall have a footprint no larger than 35" width by 24" depth, not including shock mounts. Enclosure type shall be NEMA3R as defined in MIL-E-2036 and NEMA 250-1997 and shall be designed to be reinforced and strengthened to reduce or eliminate flexing at a low natural frequency. The enclosure shall meet shock requirements as defined in MIL-STD-901D and vibration requirements as defined in MIL-STD167/1. In addition, the enclosure will be electromagnetically sealed to meet MIL-STD-461E.

Provisions shall be made for deck mounting. Sway braces and shock mounts are to be provided with the enclosure.

An unpainted knockout panel, which is corrosion resistant and sealed electromagnetically, shall be provided at the designed point of entry of cables into and out of the enclosure.

Provisions for vertical hoisting of the VSDS shall be provided. If required, lifting fixtures shall be provided.

3.1.2 Component Mounting. All components shall be mounted to be able to withstand a rugged environment.

3.1.3 Label Plates. The device shall be identified with engraved label plates, mounted on the device.

3.1.4 Painting. The VSD system enclosure shall be painted Machinery Gray, in accordance with FED-STD-595/26307. The paint scheme selected by the manufacturer shall be compatible with shipboard maintenance practices as detailed in NAVSHIPS Technical Manual, Chapter 631 and for use with Navy Formula 111 as formulated in accordance with MIL-DTL-15090.

> Note: This is an interface requirement. The manufacturer may select any coating scheme that matches color 26307 and is compatible with the maintenance practices in NSTM 631 and the shipboard use of Navy paint formula 111.

3.1.5 Recycled, Recovered or Environmentally Preferable Materials. Recycled, recovered or environmentally preferable materials should be used to the maximum extent possible provided that the materials shall meet or exceed the operational and maintenance requirements, and promote economically advantageous life cycle costs. The terms "recycled, recovered or environmentally preferable materials" means materials that have been collected or recovered from solid waste and reprocessed to become a source of raw materials, as opposed to virgin raw materials. None of the above shall be interpreted to mean that the use of used or rebuilt products is allowed under this specification unless otherwise expressly stipulated.

3.1.6 Hazardous Materials. Materials for use in the construction of VSD's shall have no effect on the health of personnel when the materials are used for their intended purpose. Regardless of other requirements, materials and parts containing asbestos, cadmium, lithium, mercury or radioactive material shall not be used.

3.1.7 Fasteners. Materials for all bolts, nuts, studs, screws and similar fasteners shall be corrosion-resistant passivated or of a material rendered resistant to corrosion. Sheet metal screws shall not be used. Galling shall be prevented. Tapped holes shall be reinforced where shearing of thread can occur.

3.1.8 Rubber or Synthetic Rubber Material. Rubber or synthetic rubber material shall not deteriorate due to contact with any fluid used for operation or maintenance of the VSD system.

3.1.9 Metals. Metals shall be of corrosion-resistant type or suitably treated to resist corrosion due to fuels, salt, spray or atmospheric conditions likely to be met in storage or normal service.

3.1.10 Dissimilar Metals. Unless suitably protected against electrolytic corrosion, dissimilar metals shall not be used in contact with each other. Dissimilar metals are defined in MIL-STD-889.

3.1.11 Assembly. The VSD system shall be provided as a kit, which shall incorporate all materials required for one complete installation. Kits shall be individually packaged. Cable or conduit termination and mounting hardware shall be provided separately by the installing activity.

3.1.12 Identification Plates. The VSD system shall be identified with a label plate that shall include the manufacturer's name, address and phone number, VSD device model number, VSD device serial number, and the VSD device rated voltage, current and horsepower. It is understood that more than one label may be utilized to provide all information specified above.

3.2 Environmental Conditions.

3.2.1 Location. The VSD system shall be installed in a sheltered location aboard ship; as such, the device will be protected from the external environment. The sheltered environment may be either controlled or uncontrolled.

3.2.2 Ambient Temperature. The VSD system shall withstand storage temperatures of -25 to 65 degrees Celsius (–4 to 149 degrees Fahrenheit) and ambient operating temperatures of -10 to 50 degrees Celsius (+14 to 122 degrees Fahrenheit) without any derating of the device. The VSD system shall meet Method 501 of MIL-STD-810.

3.2.3 Cooling. The VSD system shall be air cooled.

3.2.4 Relative Humidity. The VSD system shall operate in a relative humidity of 0 to 100 percent (non-condensing). The VSD system meet Method 507 of MIL-STD-810.

3.2.5 Inclination. The VSD system shall operate at any inclination.

3.2.6 Ship Motion and Attitude. The VSD system shall be fully operational for the ship motion and attitude conditions set forth in DOD-STD-1399, Section 301.

3.2.7 Shock. The VSD system shall meet Type A shock requirements as defined in MIL-S-901. Shock mounts and sway braces shall be specified and mounted on enclosure.

3.2.8 Vibration. The VSD system shall meet Type I vibration requirements of MIL-STD-167-1.

3.3 Safety.

3.3.1 Hazards. Hazards to VSD system equipment and personnel shall be minimized by the application of system safety principles in accordance with MIL-STD-882. Warnings and other markings should be applied as necessary to aid personnel in avoiding potential hazards or minimize to maintenance, servicing or operational problems.

3.4 Human Engineering.

3.4.1 Ergonomics. The VSD system shall be arranged so as to achieve safe, reliable, and effective performance by the operator and maintenance personnel and to optimize personnel skill requirements. MIL-STD-1472 may be used as a guide in applying human engineering design criteria for the VSD system.

3.5 Electrical Characteristics.

3.5.1 Input Power Characteristics. Electrical power for the VSD system shall be provided by the Ship Service Power System. The VSD system must be able to maintain output as defined in this specification when supplied from an ungrounded power system with characteristics as defined by MIL-STD-1399 Section 300 Type 1 power. The VSD system must be capable of maintaining output as defined in this specification with a single accidental phase to ground fault on an ungrounded system indefinitely.

3.5.2 Power Quality. The VSD system shall be designed to maintain voltage and current power quality on the input power cable to the VSD in accordance with MIL-STD-1399 Section 300 Type 1 power for all operating conditions of the VSD system and load, except starting.

3.5.3 Bonding and Grounding. The VSD system shall be bonded and grounded in accordance with MIL-STD-1310.

3.5.4 Interface Requirements. The VSD system shall be able to operate within the parameters established by Mil-Std-1399 Section 300 Table 1 for Type 1 power.

3.5.5 Electromagnetic Interference Requirements. The VSD system shall meet electromagnetic interference requirements in accordance with MIL-STD-461E. All tests that are applicable for surface ships as defined in Table V of MIL-STD-461E are to be completed in addition to CE101.

3.5.6 Automatic Transfer of Power. The VSD system shall be able to reset automatically without damage to the VSD when power is switched from normal to alternate power in a time frame of 600 milliseconds.

3.6 Variable Speed Drive Characteristics.

3.6.1 Variable Speed Drive Sizing. The power rating of the VSD shall be sized to the power rating of the motor. The VSD shall be capable of smoothly controlling the motor output speed from standstill to rated speed. The VSD shall also be capable of continuously operating the motor at any speed and torque within the ranges described and under the environmental conditions as described in this document.

3.6.2 VSD Control Functions. The VSD will provide the user configurable scalar, flux vector or sensorless vector control and include the following features:

1. Drive efficiency rating of at least 95 percent at full load.
2. Microprocessor based adjustable frequency inverter
3. Automatic voltage adjustment within power range.
4. Digital user interface panel with full function LED display for operating parameter control and status. (to include a minimum of the parameters delineated in section 3.6.5)

5. Comprehensive warning and fault protection message processing and display. (to include a minimum of the parameters delineated in section 3.6.6)
6. PC Interface

The VSD shall have provisions for remote/local control and programming of motor operation and adjustable parameters. It shall provide circuits for analog control and sensor inputs, PID process control and PC interface. The keypad will serve as a means to configure controller parameters.

3.6.3 VSD Programming. The VSD shall be fully programmable via the front panel or remote PC for adjusting parameters and setting speed and torque profiles. A digital LED display shall be provided for viewing operational parameters.

3.6.4 VSD Parameter Adjustments. At a minimum, the VSD shall be user programmable for the following functions using the command center or PC interface:

1. Access authorization to controller functions (password protection)
2. Motor operating modes
3. Minimum and maximum switching frequency
4. Minimum and maximum motor speed
5. Motor overload current
6. Programmable torque and speed profile
7. Acceleration/Deceleration time
8. Torque/Current limiting

3.6.5 VSD Standard Displays. The VSD keypad shall use high intensity digital LED displays for viewing operational parameters and shall be clearly visible in a dark or bright environment. At a minimum, the following displays shall be user selectable from the keypad:

1. DC Link Voltage
2. Motor torque
3. Motor speed
4. Output frequency
5. Output current
6. Output torque
7. Output voltage
8. Output power

3.6.6 Protective Controls and Status Indicators. The following controls and indicators (menu selectable) shall be available at a minimum as standard with the VSD. Additional protective features may be required.

1. Input overcurrent / undercurrent
2. Input overvoltage / undervoltage
3. Overfrequency / underfrequency
4. Output phase loss

5. Adjustable output current limit
6. Ground fault short circuit

3.6.7 PC Interface. The VSD shall be fitted with a separate communications port designed for connection to a personal computer (PC). The CONTRACTOR shall provide a Windows based software tool for commissioning and maintenance purposes. The software tool shall be capable of adjusting parameters, displaying actual values and controlling the VSD in lieu of the keypad.

3.7 Cabling.

3.7.1 Cable Types. Cables connected to and internal to the VSD system shall meet requirements as specified in MIL-DTL-24643.

3.8 VSD System Operation.

3.8.1 Service Life. The design service life of the VSD system for the specified operating environment shall be twenty (20) years.

3.8.2 Duty Cycle. The VSD system shall be capable of continuous operation (24 hours a day, 7 days a week).

3.9 Reliablility/Maintainability.

3.9.1 Reliability. The VSD system shall be designed for a Mean Time Between Failure of at least 10,000 hours.

4.0 Controls/Indicators for VSD System

4.1 Drive System I/O Interface Description

At a minimum the drive shall be wired for and capable of supporting the following I/O:

1. Remote START/STOP Control Inputs via external dry Normally Open (NO) start pushbutton and Normally Closed (NC) stop pushbutton wired in series.
2. Dedicated 110VAC relays for remote START/STOP of motor
3. Local START/STOP Control Inputs via NO start pushbutton and NC stop pushbutton wired in series.
4. Local and Remote Motor Running Indicator LED (Green). Remote indication via set of NO internal contacts rated for 24VDC or 115VAC.
5. Local or Remote Operation Selector Switch
6. Process Feedback input 4-20mA.
7. Local Power available indicator LED (White)
8. Local and Remote Drive Fault or Motor Overload Indicator LED (Red). Remote indication via set of NO internal contacts rated for 24VDC or 115VAC.

9. Suction and Discharge valve interlocks via external NO position switch contacts.
10. Local and Remote Fire Pump Ready Indicator LED (Green), (power available, suction and discharge valve open). Remote indication via set of NO internal contacts rated for 24VDC or 115VAC.
11. Local Suction Valve Indicator LED (White).
12. 110VAC power supply for motor thermistor monitor.
13. Motor thermal protection interlock.
14. Door mounted socket for PC interface.
15. Door mounted keypad socket and mounting for set/maintenance use. Normal keypad location will be on the drive inside the enclosure.

4.2 Operator Devices to Be Door Mounted and Wired

The following devices are to be door mounted and integrated in the controls of the VSDS:

1. START – pushbutton
2. STOP – pushbutton
3. DRIVE FAULT RESET – pushbutton
4. MOTOR OVERLOAD RESET – pushbutton
5. POWER ON – indicator light / white
6. MOTOR RUNNING – indicator light / green
7. MOTOR OVERLOAD/DRIVE FAULT – indicator light / red
8. LOCAL/REMOTE OPERATION SELECTOR SWITCH
9. SUCTION VALVE OPEN – indicator light / white
10. READY – indicator light / white

4.3 Control Scheme

The control system for the VSDS is to include the control network logic as shown in Figure #1. There will be two modes of operation:

Mode 1: Manual Mode

1. Operation from keypad
2. SUCTION VALVE OPEN indicator light
3. READY indicator light
4. POWER ON indicator light
5. MOTOR RUNNING indicator light

Mode 2: Automatic Mode

1. PID Feedback
2. START/STOP control inputs from local/remote locations
3. SUCTION VALVE OPEN indicator light
4. READY indicator light
5. POWER ON indicator light
6. MOTOR RUNNING indicator light

5.0 Technical Documentation

5.1 Technical Documentation Requirements

The CONTRACTOR shall provide a clearly illustrated technical manual covered by item OOO4 describing the operation, maintenance and overhaul of the VSD System and its components. The technical manual shall include drawings that contain schematics and plan views and be of sufficient detail for use by personnel when installing, operating or maintaining the VSD System. An illustrated parts breakdown of all major components inside the VSD and part numbers shall be included. The technical manual shall be provided at the time of the VSD System delivery. The technical manual covering the VSD System equipment shall be self contained. The technical manual shall consider the entire system, not a series of individual components.

6.0 Testing Requirements

6.1 EMI Testing.

Prior to delivery of the VSD system, the offeror shall perform the EMI tests as specified in paragraph *3.5.5* hereof and submit an EMI test report covered by item OOO2.

6.2 Interface Requirement Testing.

Prior to delivery of the VSD system, the offeror shall perform Interface requirement tests to determine if the drive system operates and can operate within the parameters of MIL-STD- 1399 Section 300 Table 1 for Type 1 power and submit an Interface test report covered by item OOO3. If the Variable Speed Drive has already been tested to other requirements, such as UL, which are stricter than MIL-STD- 1399, waivers can be applied. Proper documentation must be presented, in order to make that determination.

7.0 Delivery Requirements

7.1 Test Reports.

The EMI Test Report and the Interface Requirements Test Report shall be delivered within *165* days after date of order. The Government will notify the Contractor of the approval, disapproval, or conditional approval of the Test Reports within 21 days after receipt.

7.2 Drive System and Technical Manual.

The 350HP Variable Speed Drive System and Technical Manual shall be delivered within 200 days after date of order.

TECHNICAL EVALUATION CRITERIA

The proposed acquisition covers the procurement of a quantity of two 350 HP Variable Speed Drive Systems, used to control a 350 HP Fire Pump, on a firm-fixed price basis. It is requested a single award to the offeror whose quotation is determined to represent the best value to the Government. This best value determination should be based on an integrated assessment of both technical factors and price. The technical factors are Technical Compliance, Corporate Experience and Past Performance. These technical factors, when combined, should be considered significantly more important than price.

The technical assessment will be based on the following factors:

1. TECHNICAL COMPLIANCE: In this factor, the evaluation shall consider the degree to which an offeror has demonstrated the capability to comply with or exceed the specification requirements. In particular, greater weight will be assigned during the evaluation to an offeror's proposed Variable Speed Drive System that is as small as possible.
2. EXPERIENCE: In this factor the evaluation shall assess the offeror's capability through an analysis of the offeror's resources and previous experience with the design and manufacture of Variable Speed Drive or similar Systems.
3. PAST PERFORMANCE: In this factor, the quality of the offeror's performance record will be evaluated through an assessment of the information provided on previous contracts. This evaluation will include the relevance of the past performance information provided and the Government may contact the customers identified for the previous contracts provided to verify information on the quality, timeliness and other qualitative aspects of the offeror's performance. An offeror with no past performance record will be assigned a neutral rating in this factor.

In order to perform a technical assessment, offerors should be required to submit the following information as part of any quotation:

1. TECHNICAL COMPLIANCE: In this factor, the offeror shall provide information on the Variable Speed Drive (VSD) System they propose to furnish that demonstrates the System being offered will meet or exceed the specification requirements. The technical proposal shall address in detail the following factors in order to be evaluated:
    a. Performance Characteristics – The offeror shall provide preliminary calculations for electrically sizing the drive and a description of the control capabilities of the variable speed drive to demonstrate that the system offered can meet the control and power requirements defined in the specification. The offeror shall also describe how they intend to complete Power Interface Requirements Testing.
    b. VSD System Size – The offeror must provide information on the physical size of the VSD System they intend to furnish. The offeror must provide a preliminary drawing or sketch of the VSD System.

information regarding experience in qualifying variable speed drives to meet MIL-STD-461E.

d. Support Equipment - The offeror must also provide information on any special support equipment, such as tools, test equipment and software, required for operation, testing, maintenance, repair and/or programming of its proposed System.

2. CORPORATE EXPERIENCE: In this factor the offeror shall provide information on its resources, such as facilities, equipment and personnel. A company brochure is acceptable. In addition, the offeror shall provide previous experience with the design and manufacture of Variable Speed Drives or similar Systems that demonstrates they possess the capability to furnish a Variable Speed Drive that complies with the specification requirements.

3. PAST PERFORMANCE: In this factor an offeror shall provide information on its performance record. To comply with this requirement, offerors shall furnish the following information on at least one prior Federal, State and local government or commercial contracts completed within the past three years: Name of customer together with a point of contact and telephone number, contract or order number, description of the supplies furnished, total dollar value, delivery date, and a brief summary of the offeror's performance, including any problems encountered and their resolution.