SOLICITATION/CONTRACT/ORDER FOR COMMERCIAL ITEMS

OFFEROR TO COMPLETE BLOCKS 12, 17, 23, 24, & 30

1. REQUISITION NUMBER: 91110 33014167

2. CONTRACT NO.

3. AWARD/EFFECTIVE DATE

4. ORDER NUMBER

5. SOLICITATION NUMBER: N65540-04-Q-0038

6. SOLICITATION ISSUE DATE: 03-NOV-24

7. FOR SOLICITATION INFORMATION CALL:

a. NAME: DAVID DENNISON

b. TELEPHONE NUMBER (No Collect Calls): 215-897-1494, 215-897-7059 (FAX)

8. OFFER DUE DATE/ LOCAL TIME: 03-DEC-17/ 0400 PM

9. ISSUED BY — CODE N65540

CONTRACTING OFFICER
NSWC CARDEROCK DIVISION
5001 S. BROAD STREET
PHILADELPHIA PA 19112-1403

ATTN: DAVID DENNISON 215-897-1494

10. THIS ACQUISITION IS

- [ ] UNRESTRICTED
- [X] SET ASIDE: 100 % FOR
  - [X] SMALL BUSINESS
  - [ ] SMALL DISADV. BUSINESS
  - [ ] 8(A)

SIC: 3612
SIZE STANDARD: 750

11. DELIVERY FOR FOB DESTINATION UNLESS BLOCK IS MARKED
- [ ] SEE SCHEDULE

12. DISCOUNT TERMS: NET 30

- [ ] 13a. THIS CONTRACT IS A RATED ORDER UNDER DPAS (15 CFR 700)

13b. RATING

14. METHOD OF SOLICITATION
- [X] RFQ
- [ ] IFB
- [ ] RFP

15. DELIVER TO — CODE N65540

RECEIVING OFFICER,FISC,
NSWC CARDEROCK DIVISION
1601 LANGLEY AVENUE
PHILA. PA 19112-5051
ATTN: NAVAL BUSINESS CENTER

16. ADMINISTERED BY — CODE N65540

17a. CONTRACTOR/ OFFEROR — CODE — FACILITY CODE

TELEPHONE NO.

- [ ] 17b. CHECK IF REMITTANCE IS DIFFERENT AND PUT SUCH ADDRESS IN OFFER

18a. PAYMENT WILL BE MADE BY — CODE

18b. SUBMIT INVOICES TO ADDRESS SHOWN IN BLOCK 18a UNLESS BLOCK BELOW IS CHECKED
- [X] SEE ADDENDUM

19. ITEM NO.	20. SCHEDULE OF SUPPLIES/SERVICES	21. QUANTITY	22. UNIT	23. UNIT PRICE	24. AMOUNT
0001	REQN. NO. 91110 /33014167 ITEM NAME: 13,200 VAC - 13,800 VAC TRANSFORMER - (10/13.3 MVA) FOR THE DDX IPS LAND BASED TEST SITE IN ACCORDANCE WITH THE ATTACHED SPECIFICATIONS. (Attach Additional Sheets as Necessary)	1	LT		

25. ACCOUNTING AND APPROPRIATION DATA

26. TOTAL AWARD AMOUNT (For Govt. Use Only)

- [ ] 27a. SOLICITATION INCORPORATES BY REFERENCE FAR 52.212-1, 52.212-4. FAR 52.212-3, AND 52.212-5 ARE ATTACHED. ADDENDA [ ] ARE [X] ARE NOT ATTACHED.
- [ ] 27b. CONTRACT/PURCHASE ORDER INCORPORATES BY REFERENCE FAR 52.212-4. FAR 52.212-5 IS ATTACHED. ADDENDA [ ] ARE [ ] ARE NOT ATTACHED.

28. CONTRACTOR IS REQUIRED TO SIGN THIS DOCUMENT AND RETURN _____ COPIES TO ISSUING OFFICE. CONTRACTOR AGREES TO FURNISH AND DELIVER ALL ITEMS SET FORTH OR OTHERWISE IDENTIFIED ABOVE AND ON ANY ADDITIONAL SHEETS SUBJECT TO THE TERMS AND CONDITIONS SPECIFIED HEREIN.

29. AWARD OF CONTRACT: REFERENCE _____ OFFER DATED _____. YOUR OFFER ON SOLICITATION (BLOCK 5). INCLUDING ANY ADDITIONS OR CHANGES WHICH ARE SET FORTH HEREIN, IS ACCEPTED AS TO ITEMS:

30a. SIGNATURE OF OFFEROR/CONTRACTOR

31a. UNITED STATES OF AMERICA (SIGNATURE OF CONTRACTING OFFICER)

30b. NAME AND TITLE OF SIGNER (TYPE OR PRINT)

30c. DATE SIGNED

31b. NAME OF CONTRACTING OFFICER (TYPE OR PRINT)

31c. DATE SIGNED

32a. QUANTITY IN COLUMN 21 HAS BEEN
- [ ] RECEIVED
- [ ] INSPECTED
- [ ] ACCEPTED, AND CONFORMS TO THE CONTRACT, EXCEPT AS NOTED

32b. SIGNATURE OF AUTHORIZED GOVT. REPRESENTATIVE

32c. DATE

33. SHIP NUMBER — [ ] PARTIAL [ ] FINAL

34. VOUCHER NUMBER

35. AMOUNT VERIFIED CORRECT FOR

36. PAYMENT
- [ ] COMPLETE
- [ ] PARTIAL
- [ ] FINAL

37. CHECK NUMBER

38. S/R ACCOUNT NUMBER

39. S/R VOUCHER NUMBER

40. PAID BY

41a. I CERTIFY THIS ACCOUNT IS CORRECT AND PROPER FOR PAYMENT

41b. SIGNATURE AND TITLE OF CERTIFYING OFFICER

41c. DATE

42a. RECEIVED BY (Print)

42b. RECEIVED AT (Location)

42c. DATE REC'D (YY/MM/DD)

42d. TOTAL CONTAINERS

VENDOR:

SECTION B SUPPLIES/SERVICES

ITEM	SUPPLIES/SERVICES	QUANTITY	UI	U-PRICE	AMOUNT
0002	REQN. NO. 91110 /33117380 ITEM NAME: RELEASE FOR MANUFACTURE DOCUMENTATION IN ACCORDANCE WITH THE ATTACHED SPECIFICATIONS.	1	EA		
0003	REQN. NO. 91110 /33117382 ITEM NAME: TECHNICAL MANUAL IN ACCORDANCE WITH THE ATTACHED SPECIFICATIONS.	1	EA		

This Request for Quotations (RFQ) covers the procurement of a 13,200 VAC – 13,800 VAC Transformer and Associated Technical Data. The Transformer to be furnished shall be accordance with the attached Purchase Specification for the DD(X) IPS Land Based Test Site 13,200 VAC – 13,800 VAC Transformer (10/13.3 MVA). This RFQ is issued using Simplified Acquisition Procedures pursuant to the Test Program for Certain Commercial Items in accordance with Subpart 13.5 of the Federal Acquisition Regulation (FAR).

The Government intends to make a single award to the offeror who submits the low price technically acceptable quotation in response to this RFQ. In order to determine technical acceptability, offerors are required to submit as part of their quotation information that clearly demonstrates that the Transformer being offered will comply with all the technical requirements set forth in paragraph 5.0 of the attached Purchase Specification.

Failure to submit adequate information on the above technical factors will result in rejection of the quotation. The Government intends to make an award based on the initial quotations received. Therefore, offerors are advised their initial quotation should contain its best terms from both a technical and price standpoint.

All items will be delivered on a F.O.B. Destination basis (that is, inclusive of all transportation or shipping costs) to the destination specified in block 15 on page 1 of this RFQ in accordance with Clause 52.247-34 herein. Quotations submitted on other than a F.O.B. Destination basis will be determined to be nonresponsive and may not be considered for award.

VENDOR:

SECTION F TIME OF DELIVERY

DELIVERIES SHALL BE IN ACCORDANCE WITH THE FOLLOWING SPECIFICATIONS

ITEM	QUANTITY	DELIVERY REQUIRED
0001	1 LT	WITHIN 112 DAYS AFTER DATE OF ORDER
0002	1 EA	WITHIN 21 DAYS AFTER DATE OF ORDER
0003	1 EA	WITHIN 112 DAYS AFTER DATE OF ORDER

52.247-34 F.O.B. DESTINATION (NOV 1991)

52.212-4 CONTRACT TERMS AND CONDITIONS--COMMERCIAL ITEMS (OCT 2003)

(a) Inspection/Acceptance. The Contractor shall only tender for acceptance those items that conform to the requirements of this contract. The Government reserves the right to inspect or test any supplies or services that have been tendered for acceptance. The Government may require repair or replacement of nonconforming supplies or reperformance of nonconforming services at no increase in contract price. The Government must exercise its post-acceptance rights--(1) Within a reasonable time after the defect was discovered or should have been discovered; and (2) Before any substantial change occurs in the condition of the item, unless the change is due to the defect in the item.

(b) Assignment. The Contractor or its assignee may assign its rights to receive payment due as a result of performance of this contract to a bank, trust company, or other financing institution, including any Federal lending agency in accordance with the Assignment of Claims Act (31 U.S.C. 3727). However, when a third party makes payment (e.g., use of the Governmentwide commercial purchase card), the Contractor may not assign its rights to receive payment under this contract.

(c) Changes. Changes in the terms and conditions of this contract may be made only by written agreement of the parties.

(d) Disputes. This contract is subject to the Contract Disputes Act of 1978, as amended (41 U.S.C. 601-613). Failure of the parties to this contract to reach agreement on any request for equitable adjustment, claim, appeal or action arising under or relating to this contract shall be a dispute to be resolved in accordance with the clause at FAR 52.233-1, Disputes, which is incorporated herein by reference. The Contractor shall proceed diligently with performance of this contract, pending final resolution of any dispute arising under the contract.

(e) Definitions. The clause at FAR 52.202-1, Definitions, is incorporated herein by reference.

(f) Excusable delays. The Contractor shall be liable for default unless nonperformance is caused by an occurrence Beyond the reasonable control of the Contractor and without its fault or negligence such as, acts of God or the public enemy, acts of the Government in either its sovereign or contractual capacity, fires, floods, epidemics, quarantine restrictions, strikes, unusually severe weather, and delays

VENDOR:

of common carriers. The Contractor shall notify the Contracting Officer in writing as soon as it is reasonably possible after the commencement of any excusable delay, setting forth the full particulars in connection therewith, shall remedy such occurrence with all reasonable dispatch, and shall promptly give written notice to the Contracting Officer of the cessation of such occurrence.

(g) Invoice. (1) The Contractor shall submit an original invoice and three copies (or electronic invoice, if authorized,) to the address designated in the contract to receive invoices. An invoice must include--

(i) Name and address of the Contractor;

(ii) Invoice date and number;

(iii) Contract number, contract line item number and, if applicable, the order number;

(iv) Description, quantity, unit of measure, unit price and extended price of the items delivered;

(v) Shipping number and date of shipment including the bill of lading number and weight of shipment if shipped on Government bill of lading;

(vi) Terms of any discount for prompt payment offered;

(vii) Name and address of official to whom payment is to be sent;

(viii) Name, title, and phone number of person to notify in event of defective invoice; and

(ix) Taxpayer Indentification Number (TIN). The Contractor shall include its TIN on the invoice only if required elseswhere in this contract.

(x) Electronic funds transfer (EFT) banking information.

(A) The Contractor shall include EFT banking information on the invoice only if required elsewhere in this contract.

(B) If EFT banking information is not required to be on the invoice, in order for the invoice to be a proper invoice, the Contractor shall have submitted correct EFT banking information in accordance with the applicable solicitation provision, contract clause (e.g., 52.232-33, Payment by Electronic Funds Transfer Central Contractor Registration, or 52.232-34, Payment by Electronic Funds Transfer Other Than Central Contractor Registration), or applicable agency procedures.

(C) EFT banking information is not required if the Government waived the requirement to pay by EFT.

(2) Invoices will be handled in accordance with the Prompt Payment Act (31 U.S.C. 3903) and Office of Management and Budget (OMB) prompt payment regulations at 5 CFR part 1315.

(h) Patent indemnity. The Contractor shall indemnify the Government and its officers, employees and agents against liability, including costs, for actual or alleged direct or contributory infringement of, or inducement to infringe, any United States or foreign patent, trademark or copyright, arising out of the performance of this contract, provided the Contractor is reasonably notified of such claims and proceedings.

(i) Payment. (1) Items accepted. Payment shall be made for items accepted by the Government that have been delivered to the delivery destinations set forth in this contract.

(2) Prompt payment. The Government will make payment in accordance with the Prompt Payment Act (31 U.S.C. 3903) and prompt payment regulations at 5 CFR part 1315.

(3) Electronic Funds Transfer (EFT). If the Government makes payment by EFT, see 52.212-5(b) for the appropriate EFT clause.

(4) Discount. In connection with any discount offered

VENDOR:

for early payment, time shall be computed from the date of the invoice. For the purpose of computing the discount earned, payment shall be considered to have been made on the date which appears on the payment check or the specified payment date if an electronic funds transfer payment is made.

(5) Overpayments. If the Contractor becomes aware of a duplicate contract financing or invoice payment or that the Government has otherwise overpaid on a contract financing or invoice payment, the Contractor shall immediately notify the Contracting Officer and request instructions for disposition of the overpayment.

(j) Risk of loss. Unless the contract specifically provides otherwise, risk of loss or damage to the supplies provided under this contract shall remain with the Contractor until, and shall pass to the Government upon:

(1) Delivery of the supplies to a carrier, if transportation is f.o.b. origin; or

(2) Delivery of the supplies to the Government at the destination specified in the contract, if transportation is f.o.b. destination.

(k) Taxes. The contract price includes all applicable Federal, State, and local taxes and duties.

(l) Termination for the Government's convenience. The Government reserves the right to terminate this contract, or any part hereof, for its sole convenience. In the event of such termination, the Contractor shall immediately stop all work hereunder and shall immediately cause any and all of its suppliers and subcontractors to cease work. Subject to the terms of this contract, the Contractor shall be paid a percentage of the contract price reflecting the percentage of the work performed prior to the notice of termination, plus reasonable charges the Contractor can demonstrate to the satisfaction of the Government using its standard record keeping system, have resulted from the termination. The Contractor shall not be required to comply with the cost accounting standards or contract cost principles for this purpose. This paragraph does not give the Government any right to audit the Contractor's records. The Contractor shall not be paid for any work performed or costs incurred which reasonably could have been avoided.

(m) Termination for cause. The Government may terminate this contract, or any part hereof, for cause in the event of any default by the Contractor, or if the Contractor fails to comply with any contract terms and conditions, or fails to provide the Government, upon request, with adequate assurances of future performance. In the event of termination for cause, the Government shall not be liable to the Contractor for any amount for supplies or services not accepted, and the Contractor shall be liable to the Government for any and all rights and remedies provided by law. If it is determined that the Government improperly terminated this contract for default, such termination shall be deemed a termination for convenience.

(n) Title. Unless specified elsewhere in this contract, title to items furnished under this contract shall pass to the Government upon acceptance, regardless of when or where the Government takes physical possession.

(o) Warranty. The Contractor warrants and implies that the items delivered hereunder are merchantable and fit for use for the particular purpose described in this contract.

(p) Limitation of liability. Except as otherwise provided by an express warranty, the Contractor will not be liable to the Government for consequential damages resulting from any defect or deficiencies in accepted items.

(q) Other compliances. The Contractor shall comply with all

VENDOR:

applicable Federal, State and local laws, executive orders, rules and regulations applicable to its performance under this contract.

(r) Compliance with laws unique to Government contracts. The Contractor agrees to comply with 31 U.S.C. 1352 relating to limitations on the use of appropriated funds to influence certain Federal contracts; 18 U.S.C. 431 relating to officials not to benefit; 40 U.S.C. 327, et seq., Contract Work Hours and Safety Standards Act; 41 U.S.C. 51-58, Anti-Kickback Act of 1986; 41 U.S.C. 265 and 10 U.S.C. 2409 relating to whistleblower protections; 49 U.S.C. 40118, Fly American; and 41 U.S.C. 423 relating to procurement integrity.

(s) Order of precedence. Any inconsistencies in this solicitation or contract shall be resolved by giving precedence in the following order:

(1) The schedule of supplies/services.

(2) The Assignments, Disputes, Payments, Invoice, Other Compliances, and Compliance with Laws Unique to Government Contracts paragraphs of this clause.

(3) The clause at 52.212-5.

(4) Addenda to this solicitation or contract, including any license agreements for computer software.

(5) Solicitation provisions if this is a solicitation.

(6) Other paragraphs of this clause.

(7) The Standard Form 1449.

(8) Other documents, exhibits, and attachments.

(9) The specification.

(t) Central Contractor Registration (CCR). (1) Unless exempted by an addendum to this contract, the Contractor is responsible during performance and through final payment of any contract for the accuracy and completeness of the data within the CCR database, and for any liability resulting from the Government's reliance on inaccurate or incomplete data. To remain registered in the CCR database after the initial registration, the Contractor is required to review and update on an annual basis from the date of initial registration or subsequent updates its information in the CCR database to ensure it is current, accurate and complete. Updating information in the CCR does not alter the terms and conditions of this contract and is not a substitute for a properly executed contractual document.

(2)(i) If a Contractor has legally changed its business name, "doing business as" name, or division name (whichever is shown on the contract), or has transferred the assets used in performing the contract, but has not completed the necessary requirements regarding novation and change-of-name agreements in FAR subpart 42.12, the Contractor shall provide the responsible Contracting Officer a minimum of one business day's written notification of its intention to (A) change the name in the CCR database; (B) comply with the requirements of subpart 42.12; and (C) agree in writing to the timeline and procedures specified by the responsible Contracting Officer. The Contractor must provide with the notification sufficient documentation to support the legally changed name.

(ii) If the Contractor fails to comply with the requirements of paragraph (t)(2)(i) of this clause, or fails to perform the agreement at paragraph (t)(2)(i)(C) of this clause, and, in the absence of a properly executed novation or change-of-name agreement, the CCR information that shows the Contractor to be other than the Contractor indicated in the contract will be considered to be incorrect information within the meaning of the "Suspension of Payment" paragraph of the electronic funds transfer (EFT) clause of this contract.

(3) The Contractor shall not change the name or address for EFT payments or manual payments, as appropriate, in the CCR record

VENDOR:

to reflect an assignee for the purpose of assignment of claims (see Subpart 32.8, Assignment of Claims). Assignees shall be separately registered in the CCR database. Information provided to the Contractor's CCR record that indicates payments, including those made by EFT, to an ultimate recipient other than that Contractor will be considered to be incorrect information within the meaning of the "Suspension of payment" paragraph of the EFT clause of this contract.

(4) Offerors and Contractors may obtain information on registration and annual confirmation requirements via the internet at http://www.ccr.gov or by calling 1-888-227-2423 or 269-961-5757.

52.212-5 CONTRACT TERMS AND CONDITIONS REQUIRED TO IMPLEMENT STATUTES OR EXECUTIVE ORDERS--COMMERCIAL ITEMS (OCT 2003)

(a) The Contractor shall comply with the following Federal Acquisition Regulation (FAR) clause, which is incorporated in this contract by reference, to implement provisions of law or Executive orders applicable to acquisitions of commercial items: 52.233-3, Protest after Award (AUG 1996) (31 U.S.C. 3553).

(b) The Contractor shall comply with the FAR clauses in this paragraph (b) that the Contracting Officer has indicated as being incorporated in this contract by reference to implement provisions of law or Executive orders applicable to acquisitions of commercial items: [Contracting Officer check as appropriate.]

___ (1) 52.203-6, Restrictions on Subcontractor Sales to the Government (JUL 1995), with Alternate I (OCT 1995) (41 U.S.C. 253g and 10 U.S.C. 2402).

___ (2) 52.219-3, Notice of Total HUBZone Set-Aside (JAN 1999) (15 U.S.C. 657a).

___ (3) 52.219-4, Notice of Price Evaluation Preference for HUBZone Small Business Concerns (JAN 1999) (if the offeror elects to waive the preference, it shall so indicate in its offer) (15 U.S.C. 657a).

___ (4) (i) 52.219-5, Very Small Business Set-Aside (JUNE 2003) (Pub. L. 103-403, section 304, Small Business Reauthorization and Amendments Act of 1994).

___ (ii) Alternate I (MAR 1999) of 52.219-5.

___ (iii) Alternate II (JUNE 2003) of 52.219-5.

___ (5) (i) 52.219-6, Notice of Total Small Business Set-Aside (JUNE 2003) (15 U.S.C. 644).

___ (ii) Alternate I (OCT 1995) of 52.219-6.

___ (6) (i) 52.219-7, Notice of Partial Small Business Set-Aside (JUNE 2003) (15 U.S.C. 644).

___ (ii) Alternate I (OCT 1995) of 52.219-7.

___ (7) 52.219-8, Utilization of Small Business Concerns (OCT 2000) (15 U.S.C. 637 (d)(2) and (3)).

___ (8) (i) 52.219-9, Small Business Subcontracting Plan (JAN 2002) (15 U.S.C. 637(d)(4)).

___ (ii) Alternate I (OCT 2001) of 52.219-9.

___ (iii) Alternate II (OCT 2001) of 52.219-9.

___ (9) 52.219-14, Limitations on Subcontracting (DEC 1996) (15 U.S.C. 637(a)(14)).

___ (10) (i) 52.219-23, Notice of Price Evaluation Adjustment for Small Disadvantaged Business Concerns (JUNE 2003) (Pub. L. 103-355, section 7102, and 10 U.S.C. 2323) (if the offeror elects to waive the adjustment, it shall so indicate in its offer).

___ (ii) Alternate I (JUNE 2003) of 52.219-23.

___ (11) 52.219-25, Small Disadvantaged Business Participation Program--Disadvantaged Status and Reporting (OCT 1999) (Pub. L. 103-355, section 7102, and 10 U.S.C. 2323).

___ (12) 52.219-26, Small Disadvantaged Business Participation

VENDOR:

Program--Incentive Subcontracting (OCT 2000) (Pub. L. 103-355, section 7102, and 10 U.S.C. 2323).
___ (13) 52.222-3, Convict Labor (JUNE 2003) (E.O. 11755).
___ (14) 52.222-19, Child Labor--Cooperation with Authorities and Remedies (SEP 2002) (E.O. 13126).
_X_ (15) 52.222-21, Prohibition of Segregated Facilities (FEB 1999).
_X_ (16) 52.222-26, Equal Opportunity (APR 2002) (E.O. 11246).
_X_ (17) 52.222-35, Equal Opportunity for Special Disabled Veterans, Veterans of the Vietnam Era, and Other Eligible Veterans (DEC 2001) (38 U.S.C. 4212).
_X_ (18) 52.222-36, Affirmative Action for Workers with Disabilities (JUN 1998) (29 U.S.C. 793).
_X_ (19) 52.222-37, Employment Reports on Special Disabled Veterans, Veterans of the Vietnam Era, and Other Eligible Veterans (DEC 2001) (38 U.S.C. 4212).
___ (20) (i) 52.223-9, Estimate of Percentage of Recovered Material Content for EPA-Designated Products (AUG 2000) (42 U.S.C. 6962(c)(3)(A)(ii)).
___ (ii) Alternate I (AUG 2000) of 52.223-9 (42 U.S.C. 6962(i)(2)(C)).
___ (21) 52.225-1, Buy American Act--Supplies (JUNE 2003) (41 U.S.C. 10a-10d).
___ (22) (i) 52.225-3, Buy American Act--North American Free Trade Agreement--Israeli Trade Act (JUNE 2003) (41 U.S.C. 10a-10d, 19 U.S.C. 3301 note, 19 U.S.C. 2112 note).
___ (ii) Alternate I (MAY 2002) of 52.225-3.
___ (iii) Alternate II (MAY 2002) of 52.225-3.
___ (23) 52.225-5, Trade Agreements (OCT 2003) (19 U.S.C. 2501, et seq., 19 U.S.C. 3301 note).
___ (24) 52.225-13, Restrictions on Certain Foreign Purchases (OCT 2003) (E.o.s, proclamations, and statutes administered by the Office of Foreign Assets Control of the Department of the Treasury).
___ (25) 52.225-15, Sanctioned European Union Country End Products (FEB 2000) (E.O. 12849).
___ (26) 52.225-16, Sanctioned European Union Country Services (FEB 2000) (E.O. 12849).
___ (27) 52.232-29, Terms for Financing of Purchases of Commercial Items (FEB 2002) (41 U.S.C. 255(f), 10 U.S.C. 2307(f)).
___ (28) 52.232-30, Installment Payments for Commercial Items (OCT 1995) (41 U.S.C. 255(f), 10 U.S.C. 2307(f)).
_X_ (29) 52.232-33, Payment by Electronic Funds Transfer--Central Contractor Registration (OCT 2003) (31 U.S.C. 3332).
___ (30) 52.232-34, Payment by Electronic Funds Transfer--Other than Central Contractor Registration (MAY 1999) (31 U.S.C. 3332).
___ (31) 52.232-36, Payment by Third Party (MAY 1999) (31 U.S.C. 3332).
___ (32) 52.239-1, Privacy or Security Safeguards (AUG 1996) (5 U.S.C. 552a).
___ (33) (i) 52.247-64, Preference for Privately Owned U.S.-Flag Commercial Vessels (APR 2003) (46 U.S.C. Appx 1241 and 10 U.S.C. 2631).
___ (ii) Alternate I (APR 1984) of 52.247-64.

(c) The Contractor shall comply with the FAR clauses in this paragraph (c), applicable to commercial services, that the Contracting Officer has indicated as being incorporated in this contract by reference to implement provisions of law or Executive orders applicable to acquisitions of commercial items:

VENDOR:

[Contracting Officer check as appropriate.]

___ (1) 52.222-41, Service Contract Act of 1965, as Amended (MAY 1989) (41 U.S.C. 351, et seq.).

___ (2) 52.222-42, Statement of Equivalent Rates for Federal Hires (MAY 1989) (29 U.S.C. 206 and 41 U.S.C. 351, et seq.).

___ (3) 52.222-43, Fair Labor Standards Act and Service Contract Act--Price Adjustment (Multiple Year and Option Contracts) (MAY 1989) (29 U.S.C. 206 and 41 U.S.C. 351, et seq.).

___ (4) 52.222-44, Fair Labor Standards Act and Service Contract Act--Price Adjustment (February 2002) (29 U.S.C. 206 and 41 U.S.C. 351, et seq.).

___ (5) 52.222-47, SCA Minimum Wages and Fringe Benefits Applicable to Successor Contract Pursuant to PreDecemberessor Contractor Collective Bargaining Agreements (CBA) (May 1989) (41 U.S.C. 351, et seq.).

(d) Comptroller General Examination of Record. The Contractor shall comply with the provisions of this paragraph (d) if this contract was awarded using other than sealed bid, is in excess of the simplified acquisition threshold, and does not contain the clause at 52.215-2, Audit and Records--Negotiation.

(1) The Comptroller General of the United States, or an authorized representative of the Comptroller General, shall have access to and right to examine any of the Contractor's directly pertinent records involving transactions related to this contract.

(2) The Contractor shall make available at its offices at all reasonable times the records, materials, and other evidence for examination, audit, or reproduction, until 3 years after final payment under this contract or for any shorter period specified in FAR Subpart 4.7, Contractor Records Retention, of the other clauses of this contract. If this contract is completely or partially terminated, the records relating to the work terminated shall be made available for 3 years after any resulting final termination settlement. Records relating to appeals under the disputes clause or to litigation or the settlement of claims arising under or relating to this contract shall be made available until such appeals, litigation, or claims are finally resolved.

(3) As used in this clause, records include books, documents, accounting procedures and practices, and other data, regardless of type and regardless of form. This does not require the Contractor to create or maintain any record that the Contractor does not maintain in the ordinary course of business or pursuant to a provision of law.

(e)(1) Notwithstanding the requirements of the clauses in paragraphs (a), (b), (c), and (d) of this clause, the Contractor is not required to flow down any FAR clause, other than those in paragraphs (i) through (vi) of this paragraph in a subcontract for commercial items. Unless otherwise indicated below, the extent of the flow down shall be as required by the clause--

(i) 52.219-8, Utilization of Small Business Concerns (October 2000) (15 U.S.C. 637(d)(2) and (3)), in all subcontracts that offer further subcontracting opportunities. If the subcontract (except subcontracts to small business concerns) exceeds $500,000 ($1,000,000 for construction of any public facility), the subcontractor must include 52.219-8 in lower tier subcontracts that offer subcontracting opportunities.

(ii) 52.222-26, Equal Opportunity (April 2002) (E.O. 11246).

(iii) 52.222-35, Equal Opportunity for Special Disabled Veterans, Veterans of the Vietnam Era, and Other Eligible Veterans

VENDOR:

(December 2001) (38 U.S.C. 4212).
(iv) 52.222-36, Affirmative Action for Workers with Disabilities (June 1998) (29 U.S.C. 793).
(v) 52.222-41, Service Contract Act of 1965, as Amended (May 1989), flow down required for all subcontracts subject to the Service Contract Act of 1965 (41 U.S.C. 351, et seq.).
(vi) 52.247-64, Preference for Privately Owned U.S.-Flag Commercial Vessels (April 2003) (46 U.S.C. Appx 1241 and 10 U.S.C. 2631). Flow down required in accordance with paragraph (d) of FAR clause 52.247-64.
(2) While not required, the contractor May include in its subcontracts for commercial items a minimal number of additional clauses necessary to satisfy its contractual obligations.

252.212-7001 CONTRACT TERMS AND CONDITIONS REQUIRED TO IMPLEMENT STATUTES OR EXECUTIVE ORDERS APPLICABLE TO DEFENSE ACQUISITIONS OF COMMERCIAL ITEMS (OCT 2003)

(a) The contractor agrees to comply with the following Federal Acquisition Regulation (FAR) clause which, if checked, is included in this contract by reference to implement a provision of law applicable to acquisitions of commercial items or components.

___ 52.203-3 Gratuities (APR 1984) (10 U.S.C. 2207)

(b) The Contractor agrees to comply with any clause that is checked on the following list of Defense FAR Supplement clauses which, if checked, is included in this contract by reference to implement provisions of law or Executive orders applicable to acquisitions of commercial items or components.

___ 252.205-7000 Provision of Information to Cooperative Agreement Holders (DEC 1991) (10 U.S.C. 2416).
___ 252.219-7003 Small Disadvantaged and Women-Owned Small Business Subcontracting Plan (DoD Contracts) (APR 1996) (15 U.S.C. 637).
___ 252.219-7004 Small, Small Disadvantaged and Women-Owned Small Business Subcontracting Plan (Test Program) (JUN 1997) (15 U.S.C. 637 Note).
X 252.225-7001 Buy American Act and Balance of Payments Program (APR 2003) (41 U.S.C. 10a-10d, E.O. 10582).
___ 252.225-7012 Preference for Certain Domestic Commodities (FEB 2003) (10 U.S.C. 2533a).
___ 252.225-7014 Preference for Domestic Specialty Metals (APR 2003) (10 U.S.C. 2533a).
___ 252.225-7015 Restriction on Acquisition of Hand or Measuring Tools (APR 2003) (10 U.S.C. 2533a).
___ 252.225-7016 Restriction on Acquisition of Ball and Roller Bearings (APR 2003) (___ Alternate I) (APR 2003) (10 U.S.C. 2534 and Section 8099 of Pub. L. 104-61) and similar sections in subsequent DoD appropriations acts).
___ 252.225-7021 Trade Agreements (AUG 2003) (19 U.S.C. 2501-2518 and 19 U.S.C. 3301 note).
___ 252.225-7027 Restriction on Contingent Fees for Foreign Military Sales (APR 2003) (22 U.S.C. 2779).
___ 252.225-7028 Exclusionary Policies and Practices of Foreign Governments (APR 2003) (22 U.S.C. 2755).
___ 252.225-7036 Buy American Act--North American Free Trade Agreement Implementation Act--Balance of Payments Program (APR 2003) (___ Alternate I) (APR 2003) (41 U.S.C. 10a-10d and 19 U.S.C. 3301 note).
___ 252.225-7038 Restriction on Acquisition of Air Circuit Breakers (APR 2003) (10 U.S.C. 2534(a)(3)).

VENDOR:

___ 252.226-7001 Utilization of Indian Organizations, Indian-Owned Economic Enterprises, and Native Hawaiian Small Business Concerns (OCT 2003) (Section 8021 of Pub. L. 107-248).
___ 252.227-7015 Technical Data--Commercial Items (NOV 1995) (10 U.S.C. 2320).
___ 252.227-7037 Validation of Restrictive Markings on Technical Data (SEP 1999) (10 U.S.C. 2321).
___ 252.232-7003 Electronic Submission of Payment Requests (MAR 2003) (10 U.S.C. 2227)
___ 252.243-7002 Requests for Equitable Adjustment (MAR 1998) (10 U.S.C. 2410).
___ 252.247-7023 Transportation of Supplies by Sea (MAY 2002) (___Alternate I) (MAR 2000) (___Alternate II) (MAR 2000) (Alternate III) (MAY 2002) (10 U.S.C. 2631).
___ 252.247-7024 Notification of Transportation of Supplies by Sea (MAR 2000) (10 U.S.C. 2631).

(c) In addition to the clauses listed in paragraph (e) of the Contract Terms and Conditions Required to Implement Statutes or Executive Orders--Commercial Items clause of this contract (FAR 52.212-5), the Contractor shall include the terms of the following clauses, if applicable, in subcontracts for commercial items or commercial components, awarded at any tier under this contract:

252.225-7014 Preference for Domestic Specialty Metals, Alternate I (APR 2003) (10 U.S.C. 2533a).
252.247-7023 Transportation of Supplies by Sea (MAY 2002) (10 U.S.C. 2631)
252.247-7024 Notification of Transportation of Supplies by Sea (MAR 2000) (10 U.S.C. 2631).

52.212-1 INSTRUCTIONS TO OFFERORS--COMMERCIAL ITEMS (OCT 2003)

(a) North American Industry Classification System (NAICS) code and small business size standard. The NAICS code and small business size standard for this acquisition appear in Block 10 of the solicitation cover sheet (SF 1449). However, the small business size standard for a concern which submits an offer in its own name, but which proposes to furnish an item which it did not itself manufacture, is 500 employees.

(b) Submission of offers. Submit signed and dated offers to the office specified in this solicitation at or before the exact time specified in this solicitation. Offers may be submitted on the SF 1449, letterhead stationery, or as otherwise specified in the solicitation. As a minimum, offers must show--

(1) The solicitation number;
(2) The time specified in the solicitation for receipt of offers;
(3) The name, address, and telephone number of the offeror;
(4) A technical description of the items being offered in sufficient detail to evaluate compliance with the requirements in the solicitation. This may include product literature, or other documents, if necessary;
(5) Terms of any express warranty;
(6) Price and any discount terms;
(7) "Remit to" address, if different than mailing address;
(8) A completed copy of the representations and certifications at FAR 52.212-3;
(9) Acknowledgment of Solicitation Amendments;

VENDOR:

(10) Past performance information, when included as an evaluation factor, to include recent and relevant contracts for the same or similar items and other references (including contract numbers, points of contact with telephone numbers and other relevant information); and

(11) If the offer is not submitted on the SF 1449, include a statement specifying the extent of agreement with all terms, conditions, and provisions included in the solicitation. Offers that fail to furnish required representations or information, or reject the terms and conditions of the solicitation may be excluded from consideration.

(c) Period for acceptance of offers. The offeror agrees to hold the prices in its offer firm for 30 calendar days from the date specified for receipt of offers, unless another time period is specified in an addendum to the solicitation.

(d) Product samples. When required by the solicitation, product samples shall be submitted at or prior to the time specified for receipt of offers. Unless otherwise specified in this solicitation, these samples shall be submitted at no expense to the Government, and returned at the sender's request and expense, unless they are destroyed during preaward testing.

(e) Multiple offers. Offerors are encouraged to submit multiple offers presenting alternative terms and conditions or commercial items for satisfying the requirements of this solicitation. Each offer submitted will be evaluated separately.

(f) Late submissions, modifications, revisions, and withdrawals of offers. (1) Offerors are responsible for submitting offers, and any modifications, revisions, or withdrawals, so as to reach the Government office designated in the solicitation by the time specified in the solicitation. If no time is specified in the solicitation, the time for receipt is 4:30 p.m., local time, for the designated Government office on the date that offers or revisions are due.

(2)(i) Any offer, modification, revision, or withdrawal of an offer received at the Government office designated in the solicitation after the exact time specified for receipt of offers is "late" and will not be considered unless it is received before award is made, the Contracting Officer determines that accepting the late offer would not unduly delay the acquisition; and--

(A) If it was transmitted through an electronic commerce method authorized by the solicitation, it was received at the initial point of entry to the Government infrastructure not later than 5:00 p.m. one working day prior to the date specified for receipt of offers; or

(B) There is acceptable evidence to establish that it was received at the Government installation designated for receipt of offers and was under the Government's control prior to the time set for receipt of offers; or

(C) If this solicitation is a request for proposals, it was the only proposal received.

(ii) However, a late modification of an otherwise successful offer, that makes its terms more favorable to the Government, will be considered at any time it is received and may be accepted.

(3) Acceptable evidence to establish the time of receipt at the Government installation includes the time/date stamp of that installation on the offer wrapper, other documentary evidence of receipt maintained by the installation, or oral testimony or statements of Government personnel.

(4) If an emergency or unanticipated event interrupts

VENDOR:

normal Government processes so that offers cannot be received at the Government office designated for receipt of offers by the exact time specified in the solicitation, and urgent Government requirements preclude amendment of the solicitation or other notice of an extension of the closing date, the time specified for receipt of offers will be deemed to be extended to the same time of day specified in the solicitation on the first work day on which normal Government processes resume.

(5) Offers may be withdrawn by written notice received at any time before the exact time set for receipt of offers. Oral offers in response to oral solicitations may be withdrawn orally. If the solicitation authorizes facsimile offers, offers may be withdrawn via facsimile received at any time before the exact time set for receipt of offers, subject to the conditions specified in the solicitation concerning facsimile offers. An offer may be withdrawn in person by an offeror or its authorized representative if, before the exact time set for receipt of offers, the identity of the person requesting withdrawal is established and the person signs a receipt for the offer.

(g) Contract award (not applicable to Invitation for Bids). The Government intends to evaluate offers and award a contract without discussions with offerors. Therefore, the offeror's initial offer should contain the offeror's best terms from a price and technical standpoint. However, the Government reserves the right to conduct discussions if later determined by the Contracting Officer to be necessary. The Government may reject any or all offers if such action is in the public interest; accept other than the lowest offer; and waive informalities and minor irregularities in offers received.

(h) Multiple awards. The Government may accept any item or group of items of an offer, unless the offeror qualifies the offer by specific limitations. Unless otherwise provided in the Schedule, offers may not be submitted for quantities less than those specified. The Government reserves the right to make an award on any item for a quantity less than the quantity offered, at the unit prices offered, unless the offeror specifies otherwise in the offer.

(i) Availability of requirements documents cited in the solicitation. (1)(i) The GSA Index of Federal Specifications, Standards and Commercial Item Descriptions, FPMR Part 101-29, and copies of specifications, standards, and commercial item descriptions cited in this solicitation may be obtained for a fee by submitting a request to--

GSA Federal Supply Service Specifications Section
Suite 8100
470 East L'Enfant Plaza, SW
Washington, DC 20407

Telephone (202) 619-8925
Facsimile (202) 619-8978.

(ii) If the General Services Administration, Department of Agriculture, or Department of Veterans Affairs issued this solicitation, a single copy of specifications, standards, and commercial item descriptions cited in this solicitation may be obtained free of charge by submitting a request to the addressee in paragraph (i)(1)(i) of this provision. Additional copies will be issued for a fee.

(2) The DoD Index of Specifications and Standards (DoDISS) and documents listed in it may be obtained from the--

VENDOR:

Department of Defense Single Stock Point (DoDSSP)
Building 4, Section D
700 Robbins Avenue
Philadelphia, PA 19111-5094

Telephone (215) 697-2667/2179
Facsimile (215) 697-1462.

(i) Automatic distribution may be obtained on a subscription basis.

(ii) Order forms, pricing information, and customer support information may be obtained--

(A) By telephone at (215) 697-2667/2179; or

(B) Through the DoDSSP Internet site at http://dodssp.daps.mil.

(3) Nongovernment (voluntary) standards must be obtained from the organization responsible for their preparation, publication, or maintenance.

(j) Data Universal Numbering System (DUNS) Number. (Applies to all offers exceeding $25,000, and offers of $25,000 or less if the solicitation requires the Contractor to be registered in the Central Contractor Registration (CCR) database. The offeror shall enter, in the block with its name and address on the cover page of its offer, the annotation "DUNS" or "DUNS +4" followed by the DUNS or DUNS +4 number that identifies the offeror's name and address. The DUNS +4 is the DUNS number plus a 4-character suffix that may be assigned at the discretion of the offeror to establish additional CCR records for identifying alternative Electronic Funds Transfer (EFT) accounts (see FAR Subpart 32.11) for the same parent concern. If the offeror does not have a DUNS number, it should contact Dun and Bradstreet directly to obtain one. An offeror within the United States may contact Dun and Bradstreet by calling 1-866-705-5711 or via the internet at http://www.dnb.com. An offeror located outside the United States must contact the local Dun and Bradstreet office for a DUNS number.

(k) Central Contractor Registration. Unless exempted by an addendum to this solicitation, by submission of an offer, the offeror acknowledges the requirement that a prospective awardee shall be registered in the CCR database prior to award, during performance and through final payment of any contract resulting from this solicitation. If the Offeror does not become registered in the CCR database in the time prescribed by the Contracting Officer, the Contracting Officer will proceed to award to the next otherwise successful registered Offeror. Offerors may obtain information on registration and annual confirmation requirements via the Internet at http://www.ccr.gov or by calling 1-888-227-2423 or 269-961-5757.

52.212-3 OFFEROR REPRESENTATIONS AND CERTIFICATIONS-COMMERCIAL ITEMS (JUN 2003)--ALTERNATE I (APR 2002)

(a) Definitions. As used in this provision:

"Emerging small business" means a small business concern whose size is no greater than 50 percent of the numerical size standard for the NAICS code designated.

"Forced or indentured child labor" means all work or service--

(1) Exacted from any person under the age of 18 under the menace of any penalty for its nonperformance and for which the worker does not offer himself voluntarily; or

(2) Performed by any person under the age of 18 pursuant to a contract the enforcement of which can be accomplished by

VENDOR:

process or penalties.

"Service-disabled veteran-owned small business concern"--

(1) Means a small business concern--

(i) Not less than 51 percent of which is owned by one or more service--disabled veterans or, in the case of any publicly owned business, not less than 51 percent of the stock of which is owned by one or more service-disabled veterans; and

(ii) The management and daily business operations of which are controlled by one or more service-disabled veterans or, in the case of a veteran with permanent and severe disability, the spouse or permanent caregiver of such veteran.

(2) Service-disabled veteran means a veteran, as defined in 38 U.S.C. 101(2), with a disability that is service-connected, as defined in 38 U.S.C. 101(16).

"Small business concern" means a concern, including its affiliates, that is independently owned and operated, not dominant in the field of operation in which it is bidding on Government contracts, and qualified as a small business under the criteria in 13 CFR part 121 and size standards in this solicitation.

"Veteran-owned small business concern" means a small business concern--

(1) Not less than 51 percent of which is owned by one or more veterans (as defined at 38 U.S.C. 101(2)) or, in the case of any publicly owned business, not less than 51 percent of the stock of which is owned by one or more veterans; and

(2) The management and daily business operations of which are controlled by one or more veterans.

"Women-owned small business concern" means a small business concern--

(1) That is at least 51 percent owned by one or more women; or, in the case of any publicly owned business, at least 51 percent of the stock of which is owned by one or more women; and

(2) Whose management and daily business operations are controlled by one or more women.

"Women-owned business concern" means a concern which is at least 51 percent owned by one or more women; or in the case of any publicly owned business, at least 51 percent of its stock is owned by one or more women; and whose management and daily business operations are controlled by one or more women.

(b) Taxpayer Identification Number (TIN) (26 U.S.C. 6109, 31 U.S.C. 7701). (Not applicable if the offeror is required to provide this information to a central contractor registration database to be eligible for award.)

(1) All offerors must submit the information required in paragraphs (b)(3) through (b)(5) of this provision to comply with debt collection requirements of 31 U.S.C. 7701(c) and 3325(d), reporting requirements of 26 U.S.C. 6041, 6041A, and 6050M, and implementing regulations issued by the Internal Revenue Service (IRS).

(2) The TIN may be used by the Government to collect and report on any delinquent amounts arising out of the offeror's relationship with the Government (31 U.S.C. 7701(c)(3)). If the resulting contract is subject to the payment reporting requirements described in FAR 4.904, the TIN provided hereunder may be matched with IRS records to verify the accuracy of the offeror's TIN.

(3) Taxpayer Identification Number (TIN).

[ ] TIN: _____.

[ ] TIN has been applied for.

VENDOR:

[ ] TIN is not required because:

[ ] Offeror is a nonresident alien, foreign corporation, or foreign partnership that does not have income effectively connected with the conduct of a trade or business in the United States and does not have an office or place of business or a fiscal paying agent in the United States;

[ ] Offeror is an agency or instrumentality of a foreign government;

[ ] Offeror is an agency or instrumentality of the Federal Government.

(4) Type of organization.

[ ] Sole proprietorship;
[ ] Partnership;
[ ] Corporate entity (not tax-exempt);
[ ] Corporate entity (tax-exempt);
[ ] Government entity (Federal, State, or local);
[ ] Foreign government;
[ ] International organization per 26 CFR 1.6049-4;
[ ] Other _____.

(5) Common parent.

[ ] Offeror is not owned or controlled by a common parent;
[ ] Name and TIN of common parent:
Name _____.
TIN _____.

(c) Offerors must complete the following representations when the resulting contract will be performed in the United States or its outlying areas. Check all that apply.

(1) Small business concern. The offeror represents as part of its offer that it [ ] is, [ ] is not a small business concern.

(2) Veteran-owned small business concern. [Complete only if the offeror represented itself as a small business concern in paragraph (c)(1) of this provision.] The offeror represents as part of its offer that it [ ] is, [ ] is not a veteran-owned small business concern.

(3) Service-disabled veteran-owned small business concern. [Complete only if the offeror represented itself as a veteran-owned small business concern in paragraph (c)(2) of this provision.] The offeror represents as part of its offer that it [ ] is, [ ] is not a service-disabled veteran-owned small business concern.

(4) Small disadvantaged business concern. [Complete only if the offeror represented itself as a small business concern in paragraph (c)(1) of this provision.] The offeror represents, for general statistical purposes, that it [ ] is, [ ] is not a small disadvantaged business concern as defined in 13 CFR 124.1002.

(5) Women-owned small business concern. [Complete only if the offeror represented itself as a small business concern in paragraph (c)(1) of this provision.] The offeror represents that it [ ] is, [ ] is not a women-owned small business concern. Note: Complete paragraphs (c)(6) and (c)(7) only if this solicitation is expected to exceed the simplified acquisition threshold.

(6) Women-owned business concern (other than small business concern). [Complete only if the offeror is a women-owned business concern and did not represent itself as a small business concern in paragraph (c)(1) of this provision.] The offeror represents that it [ ] is a women-owned business concern.

(7) Tie bid priority for labor surplus area concerns. If this is an invitation for bid, small business offerors may identify the labor surplus areas in which costs to be incurred on account of manufacturing or production (by offeror or first-tier subcontractors) amount to more than 50 percent of the contract price:

VENDOR:

_____

(8) Small Business Size for the Small Business Competitiveness Demonstration Program and for the Targeted Industry Categories under the Small Business Competitiveness Demonstration Program. [Complete only if the offeror has represented itself to be a small business concern under the size standards for this solicitation.]

(i) (Complete only for solicitations indicated in an addendum as being set-aside for emerging small businesses in one of the four designated industry groups (DIGs).) The offeror represents as part of its offer that it [ ] is, [ ] is not an emerging small business.

(ii) (Complete only for solicitations indicated in an addendum as being for one of the targeted industry categories (TICs) or four designated industry groups (DIGs).) Offeror represents as follows:

(A) Offeror's number of employees for the past 12 months (check the Employees column if size standard stated in the solicitation is expressed in terms of number of employees); or

(B) Offeror's average annual gross revenue for the last 3 fiscal years (check the Average Annual Gross Number of Revenues column if size standard stated in the solicitation is expressed in terms of annual receipts).

(Check one of the following):

Number of Employees	Average Annual Gross Revenues
____ 50 or fewer	____ $1 million or less
____ 51--100	____ $1,000,001--$2 million
____ 101--250	____ $2,000,001--$3.5 million
____ 251--500	____ $3,500,001--$5 million
____ 501--750	____ $5,000,001--$10 million
____ 751--1,000	____ $10,000,001--$17 million
____ Over 1,000	____ Over $17 million

(9) (Complete only if the solicitation contains the clause at FAR 52.219-23, Notice of Price Evaluation Adjustment for Small Disadvantaged Business Concerns, or FAR 52.219-25, Small Disadvantaged Business Participation Program--Disadvantaged Status and Reporting, and the offeror desires a benefit based on its disadvantaged status.)

(i) General. The offeror represents that either--

(A) It [ ] is, [ ] is not certified by the Small Business Administration as a small disadvantaged business concern and identified, on the date of this representation, as a certified small disadvantaged business concern in the database maintained by the Small Business Administration (PRO-Net), and that no material change in disadvantaged ownership and control has occurred since its certification, and, where the concern is owned by one or more individuals claiming disadvantaged status, the net worth of each individual upon whom the certification is based does not exceed $750,000 after taking into account the applicable exclusions set forth at 13 CFR 124.104(c)(2); or

(B) It [ ] has, [ ] has not submitted a completed application to the Small Business Administration or a Private Certifier to be certified as a small disadvantaged business concern in accordance with 13 CFR 124, Subpart B, and a decision on that application is pending, and that no material change in disadvantaged ownership and control has occurred since its application was submitted.

VENDOR:

(ii) [ ] Joint Ventures under the Price Evaluation Adjustment for Small Disadvantaged Business Concerns. The offeror represents, as part of its offer, that it is a joint venture that complies with the requirements in 13 CFR 124. 1002(f) and that the representation in paragraph (c)(9)(i) of this provision is accurate for the small disadvantaged business concern that is participating in the joint venture. [The offeror shall enter the name of the small disadvantaged business concern that is participating in the joint venture:_____.]

(10) HUBZone small business concern. [Complete only if the offeror represented itself as a small business concern in paragraph (c)(1) of this provision.] The offeror represents, as part of its offer, that--

(i) It [ ] is, [ ] is not a HUBZone small business concern listed, on the date of this representation, on the List of Qualified HUBZone Small Business Concerns maintained by the Small Business Administration, and no material change in ownership and control, principal office, or HUBZone employee percentage has occurred since it was certified by the Small Business Administration in accordance with 13 CFR part 126; and

(ii) It [ ] is, [ ] is not a joint venture that complies with the requirements of 13 CFR part 126, and the representation in paragraph (c)(10)(i) of this provision is accurate for the HUBZone small business concern or concerns that are participating in the joint venture. [The offeror shall enter the name or names of the HUBZone small business concern or concerns that are participating in the joint venture:_____.] Each HUBZone small business concern participating in the joint venture shall submit a separate signed copy of the HUBZone representation.

(11) (Complete if the offeror has represented itself as disadvantaged in paragraph (c)(4) or (c)(9) of this provision.) The offeror shall check the category in which its ownership falls:

____ Black American.

____ Hispanic American.

____ Native American (American Indians, Eskimos, Aleuts, or Native Hawaiians).

____ Asian-Pacific American (persons with origins from Burma, Thailand, Malaysia, Indonesia, Singapore, Brunei, Japan, China, Taiwan, Laos, Cambodia (Kampuchea), Vietnam, Korea, The Philippines, U.S. Trust Territory or the Pacific Islands (Republic of Palau), Republic of the Marshall Islands, Federated States of Micronesia, the Commonwealth of the Northern Mariana Islands, Guam, Samoa, Macao, Hong Kong, Fiji, Tonga, Kiribati, Tuvalu, or Nauru).

____ Subcontinent Asian (Asian-Indian) American (persons with origins from India, Pakistan, Bangladesh, Sri Lanka, Bhutan, the Maldives Islands, or Nepal).

____ Individual/concern, other than one of the preceding.

(11) HUBZone small business concern. [Complete only if the offeror represented itself as a small business concern in paragraph (c)(1) of this provision.] The offeror represents as part of its offer that-

(i) It [ ] is, [ ] is not a HUBZone small business concern listed, on the date of this representation, on the List of Qualified HUBZone Small Business Concerns Maintained by the Small Business Administration, and no material change in ownership and control, principal place of ownership, or HUBZone employee percentage has occurred since it was certified by the Small Business Administration in accordance with 13 CFR part 126; and

(ii) It [ ] is, [ ] is not a joint venture that complies

VENDOR:

with the requirements of 13 CFR part 126, and the representation in paragraph (c)(11)(i) of this provision is accurate for the HUBZone small business concern or concerns that are participating on the joint venture. [The offeror shall enter the name or names of the HUBZone small business concern or concerns that are participating in the joint venture: _____.] Each HUBZone small business concern participating in the joint venture shall submit a separate signed copy of the HUBZone representation.

(d) Representations required to implement provisions of Executive Order 11246--

(1) Previous contracts and compliance. The offeror represents that--

(i) It [ ] has, [ ] has not participated in a previous contract or subcontract subject to the Equal Opportunity clause of this solicitation; and

(ii) It [ ] has, [ ] has not filed all required compliance reports.

(2) Affirmative Action Compliance. The offeror represents that--

(i) It [ ] has developed and has on file, [ ] has not developed and does not have on file, at each establishment, affirmative action programs required by rules and regulations of the Secretary of Labor (41 CFR parts 60-1 and 60-2), or

(ii) It [ ] has not previously had contracts subject to the written affirmative action programs requirement of the rules and regulations of the Secretary of Labor.

(e) Certification Regarding Payments to Influence Federal Transactions (31 U.S.C. 1352). (Applies only if the contract is expected to exceed $100,000.) By submission of its offer, the offeror certifies to the best of its knowledge and belief that no Federal appropriated funds have been paid or will be paid to any person for influencing or attempting to influence an officer or employee of any agency, a Member of Congress, an officer or employee of Congress or an employee of a Member of Congress on his or her behalf in connection with the award of any resultant contract.

(f) Buy American Act Certificate. (Applies only if the clause at Federal Acquisition Regulation (FAR) 52.225-1, Buy American Act--Supplies, is included in this solicitation.)

(1) The offeror certifies that each end product, except those listed in paragraph (f)(2) of this provision, is a domestic end product and that the offeror has considered components of unknown origin to have been mined, produced, or manufactured outside the United States. The offeror shall list as foreign end products those end products manufactured in the United States that do not qualify as domestic end products. The terms "component," "domestic end product," "end product," "foreign end product," and "United States" are defined in the clause of this solicitation entitled "Buy American Act--Supplies."

(2) Foreign End Products:

Line Item No	Country of Origin
_____	_____
_____	_____
_____	_____

(List as necessary)

(3) The Government will evaluate offers in accordance with the policies and procedures of FAR Part 25.

(g)(1) Buy American Act--North American Free Trade Agreement--Israeli Trade Act Program Certificate. (Applies only if the clause at FAR 52.225-3, Buy American Act--North American Free Trade

VENDOR:

Agreement--Israeli Trade Act, is included in this solicitation.)

(i) The offeror certifies that each end product, except those listed in paragraph (g)(1)(ii) or (g)(1)(iii) of this provision, is a domestic end product and that the offeror has considered components of unknown origin to have been mined, produced, or manufactured outside the United States. The terms "component," "domestic end product," "end product," "foreign end product," and "United States" are defined in the clause of this solicitation entitled "Buy American Act--North American Free Trade Agreement--Israeli Trade Act."

(ii) The offeror certifies that the following supplies are NAFTA country end products or Israeli end products as defined in the clause of this solicitation entitled "Buy American Act--North American Free Trade Agreement--Israeli Trade Act":

NAFTA Country or Israeli End Products:

Line Item No	Country of Origin
_____	_____
_____	_____
_____	_____

(List as necessary)

(iii) The offeror shall list those supplies that are foreign end products (other than those listed in paragraph (g)(1)(ii) of this provision) as defined in the clause of this solicitation entitled "Buy American Act--North American Free Trade Agreement--Israeli Trade Act." The offeror shall list as other foreign end products those end products manufactured in the United States that do not qualify as domestic end products.

Other Foreign End Products:

Line Item No	Country of Origin
_____	_____
_____	_____
_____	_____

(List as necessary)

(iv) The Government will evaluate offers in accordance with the policies and procedures of FAR Part 25.

(2) Buy American Act--North American Free Trade Agreements--Israeli Trade Act Certificate, Alternate I (May 2002). If Alternate I to the clause at FAR 52.225-3 is included in this solicitation, substitute the following paragraph (g)(1)(ii) for paragraph (g)(1)(ii) of the basic provision:

(g)(1)(ii) The offeror certifies that the following supplies are Canadian end products as defined in the clause of this solicitation entitled "Buy American Act--North American Free Trade Agreement--Israeli Trade Act":

Canadian End Products:

Line Item No.

_____

_____

_____

(List as necessary)

(3) Buy American Act--North American Free Trade Agreements--Israeli Trade Act Certificate, Alternate II (May 2002). If Alternate II to the clause at FAR 52.225-3 is included in this solicitation, substitute the following paragraph (g)(1)(ii) for

VENDOR:

paragraph (g)(1)(ii) of the basic provision:
(g)(1)(ii) The offeror certifies that the following supplies are Canadian end products or Israeli end products as defined in the clause of this solicitation entitled "Buy American Act--North American Free Trade Agreement--Israeli Trade Act":

Canadian or Israeli End Products:

Line Item No	Country of Origin
_____	_____
_____	_____
_____	_____

(List as necessary)

(4) Trade Agreements Certificate. (Applies only if the clause at FAR 52.225-5, Trade Agreements, is included in this solicitation.)
(i) The offeror certifies that each end product, except those listed in paragraph (g)(4)(ii) of this provision, is a U.S.-made, designated country, Caribbean Basin country, or NAFTA country end product, as defined in the clause of this solicitation entitled "Trade Agreements."
(ii) The offeror shall list as other end products those end products that are not U.S.-made, designated country, Caribbean Basin country, or NAFTA country end products.

Other End Products:

Line Item No	Country of Origin
_____	_____
_____	_____
_____	_____

(List as necessary)

(iii) The Government will evaluate offers in accordance with the policies and procedures of FAR Part 25. For line items subject to the Trade Agreements Act, the Government will evaluate offers of U.S.-made, designated country, Caribbean Basin country, or NAFTA country end products without regard to the restrictions of the Buy American Act. The Government will consider for award only offers of U.S.-made, designated country, Caribbean Basin country, or NAFTA country end products unless the Contracting Officer determines that there are no offers for such products or that the offers for such products are insufficient to fulfill the requirements of the solicitation.
(h) Certification Regarding Debarment, Suspension or Ineligibility for Award (Executive Order 12549). (Applies only if the contract value is expected to exceed the simplified acquisition threshold.) The offeror certifies, to the best of its knowledge and belief, that the offeror and/or any of its principals--
(1) [ ] Are, [ ] are not presently debarred, suspended, proposed for debarment, or declared ineligible for the award of contracts by any Federal agency;
(2) [ ] Have, [ ] have not, within a three-year period preceding this offer, been convicted of or had a civil judgment rendered against them for: commission of fraud or a criminal offense in connection with obtaining, attempting to obtain, or performing a Federal, state or local government contract or subcontract; violation of Federal or state antitrust statutes relating to the submission of offers; or commission of embezzlement, theft, forgery, bribery, falsification or destruction of records, making false statements, tax evasion, or receiving stolen property; and

VENDOR:

(3) [ ] Are, [ ] are not presently indicted for, or otherwise criminally or civilly charged by a Government entity with, commission of any of these offenses.

(i) Certification Regarding Knowledge of Child Labor for Listed End Products (Executive Order 13126). [The Contracting Officer must list in paragraph (i)(1) any end products being acquired under this solicitation that are included in the List of Products Requiring Contractor Certification as to Forced or Indentured Child Labor, unless excluded at 22.1503(b).]

(1) Listed end products.

Listed End Product

_____

_____

Listed Countries of Origin

_____

_____

(2) Certification. [If the Contracting Officer has identified end products and countries of origin in paragraph (i)(1) of this provision, then the offeror must certify to either (i)(2)(i) or (i)(2)(ii) by checking the appropriate block.]

[ ] (i) The offeror will not supply any end product listed in paragraph (i)(1) of this provision that was mined, produced, or manufactured in the corresponding country as listed for that product.

[ ] (ii) The offeror may supply an end product listed in paragraph (i)(1) of this provision that was mined, produced, or manufactured in the corresponding country as listed for that product. The offeror certifies that it has made a good faith effort to determine whether forced or indentured child labor was used to mine, produce, or manufacture any such end product furnished under this contract. On the basis of those efforts, the offeror certifies that it is not aware of any such use of child labor.

(End of provision)

Your quotation must include the following information:

Price list number and date

or

Cost breakdown by direct labor (list categories, hours and pay rates). In addition to the direct rates, provide the applicable indirect information (G&A), overhead, facilities capital cost of money (FCCM) and profit.

or

Applicable General Services Administration (GSA) contract number.

If unable to quote FOB, Destination, please complete the following:

FOB Point _____

VENDOR:

Estimated Shipping Charge _____

Business size:

Large _____ Small _____ Nonprofit _____

Cage Code _____

Tax Identification Number (TIN) _____

DUNNS _____

ELIGIBILITY REQUIREMENTS

All contractors and individuals doing business with the Federal Government must be registered at the Contractor Central Registration Database located at:
http:ccr.dlsc.dla.mil/.

ELECTRONIC DISTRIBUTION OF CONTRACT DOCUMENTS

All contract award and contract modification documents will be distributed electronically using the Navy Air Force Interface (NAFI) system. The contractor's copy will be provided in portable document format (pdf) as an attachment to an e-mail that will be sent to the contractor by the NAFI system. A pdf file may be accessed using Adobe Acrobat Reader software. This is a free software that may be downloaded at:
http://www.adobe.com/products/acrobat/readstep.html

Provide the following information that will be used to make electronic distribution for any resultant contract:

Name of Point of Contact to Receive Distribution _____

Phone Number for Point of Contact _____

E-Mail Address for Receipt of Distribution _____

USE OF THE GOVERNMENTWIDE COMMERCIAL PURCHASE CARD

Will you accept the Governmentwide Commercial Purchase Card as a method of purchasing supplies and/or services.

_____Yes _____ No

Will you accept the Governmentwide Commercial Purchase Card as a method of payment for your invoice.

_____Yes _____ No

VENDOR:

DUTY FREE ENTRY

Will any materials being shipped to the Government require a duty-free entry certificate for foreign supplies.

_____Yes _____ No

If yes, please include dollar amount $_____

SPECIFICATION NUMBER: TS050-02, Rev. -
DATE: 24 October 2003

Purchase Specification
For The
IPS Land Based Test Site

13,200 VAC – 13,800 VAC Transformer (10 / 13.3 MVA)

Table Of Contents

1.0 Introduction **3**

2.0 Scope **3**

2.1 Equipment and Services to be Provided by the Supplier: 3
2.2 Equipment and Services to be Provided by the Government: 3

3.0 Applicable Documents **5**

4.0 Release for Manufacture **5**

5.0 Technical Requirements **6**

5.1 Transformer 6
5.1.1 General 6
5.1.2 Enclosure 8
5.1.3 Testing 10

6.0 Technical Data **11**

6.1 Drawings 11
6.2 Technical Manuals 12
6.3 Special Tools / Equipment List 12
6.4 Recommended Maintenance & Spare Parts List 12

7.0 Inspection and Testing **12**

8.0 Shipping **12**

8.1 Packaging 12
8.2 Marking 12
8.3 Delivery 13

Figures

Figure 1 - Transformer One Line Diagram & Plan View Layout 4

1.0 Introduction

This purchase specification and all documents referenced herein contain all of the detailed requirements for (1) Liquid Immersed, Less Flammable Type, 13,200 VAC – 13,800 VAC, 10,000 / 13,300 KVA, 3 Phase, 60 Hz, delta-wye power transformer to be located outdoors at the Naval Surface Warfare Center, Carderock Division, Ship Service Engineering Station (NSWCCD-SSES), Philadelphia Naval Base, Philadelphia, PA. This transformer will be used to supply utility power to a land based test site. It is considered Commercial Off the Shelf (COTS) and could be utilized in various industrial settings, such as heavy manufacturing, requiring substantial utility power.

2.0 Scope

2.1 Equipment and Services to be Provided by the Supplier:

The transformer and protective devices (see Figure 1) shall be suitable for industrial installation and shall be constructed in accordance with the best commercial practices. It shall be the Supplier's responsibility to furnish equipment suitable and complete in details for the services intended. The equipment shall be designed, constructed and tested in accordance with applicable regulations of IEEE, Underwriter Laboratories, Inc., NEMA and the National Electrical Code as specified herein. The Supplier shall be responsible for delivery of each of the following to NSWCCD-SSES in Philadelphia:

Item	Qty	Description
1	1	Transformer, 13,200 VAC – 13,800 VAC, 10,000 / 13,300 KVA, 3 Phase, 60 Hz, Liquid Immersed, Less Flammable Type , Outdoor Primary Unit Substation Transformer
2	1	Release for Manufacture Documentation (Section 4.0)
3	3	Technical Manual (Section 6.2)

2.2 Equipment and Services to be Provided by the Government:

The Government shall install the Transformer and shall be responsible for the following items:

1. Mounting foundations, structural components and mounting bolts attaching the Supplier-furnished equipment to the site structure, and,
2. Associated cabling.

SPECIFICATION NUMBER: TS050-02, Rev. -
DATE: 24 October 2003

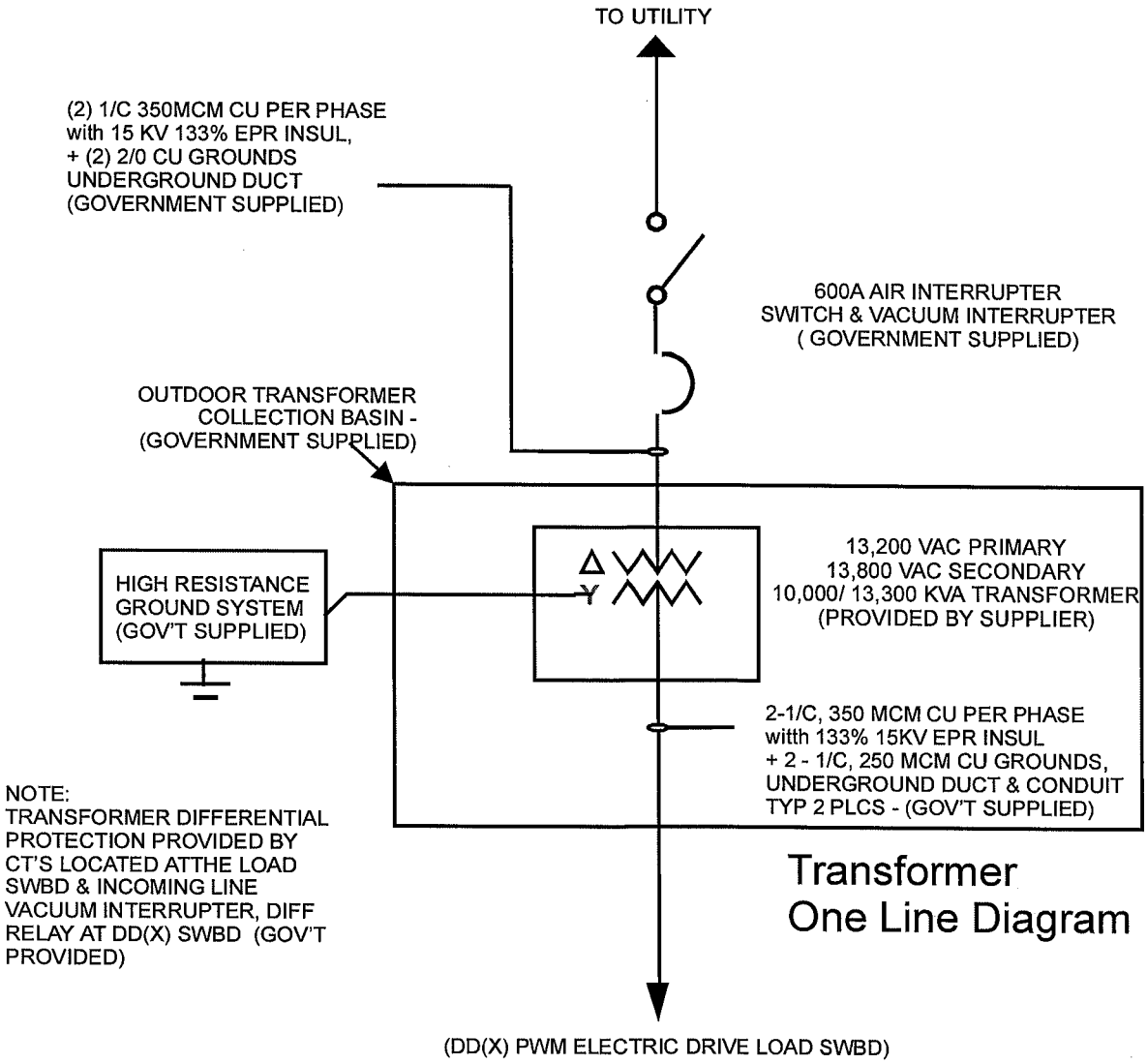

Transformer Plan View

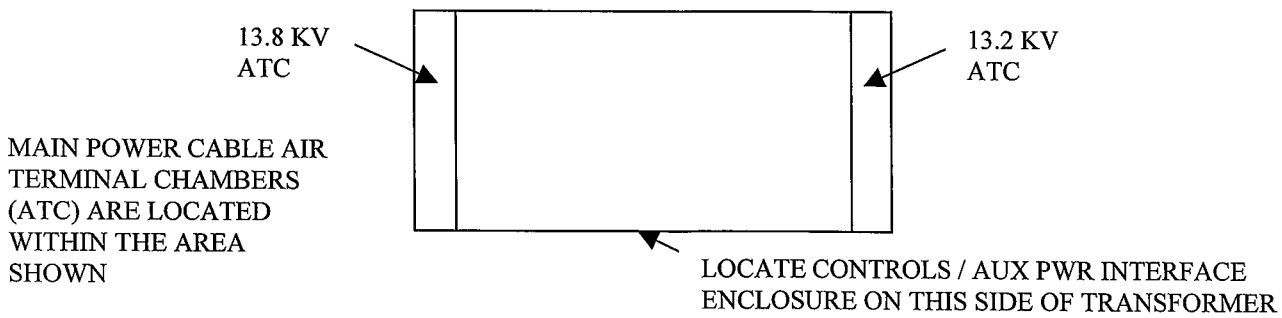

Figure 1

3.0 Applicable Documents

- NFPA-70, National Electrical Code, 2002; Article 450, Transformers and Transformer Vaults
- IEEE Standard C57.12.90-1999, Standard Test Code for Liquid Immersed Distribution, Power, and Regulating Transformers
- IEEE Standard C57.12.00-2000, Standard General Requirements for Liquid Immersed Distribution, Power, and Regulating Transformers
- IEEE Standard C57.110-1998, Recommended Practice for Establishing Transformer Capability When Supplying Non-sinusoidal Load Currents

4.0 Release for Manufacture

The Supplier shall submit the following documents to the Government, for approval, prior to obtaining a Release for Manufacture:

- Final Outline, Detail, and Electrical Drawings (Section 6.1)
- List of Special Tools / Equipment required to put transformer in service

5.0 Technical Requirements

5.1 Transformer

5.1.1 General:

A.	**Transformer Type:**	1. Liquid Immersed, Less Flammable Type, Self-Cooled / Fan Forced Air Cooled (KNAN/KNAF) 2. Outdoor Primary Unit Substation Transformer
B.	**Power Rating:**	1. 10,000 / 13,300 KVA continuous at the fundamental 60 HZ frequency. 2. This transformer will be installed in a power system with a large Variable Speed Motor Drive that will inject current harmonics through the transformer. For the transformer proposed, verify that the standard 10,000 / 13,300 KVA transformer is capable of supporting a harmonic load (as specified below) with the inherent margin provided with the Forced Air cooling. The worst case harmonic current profile on a 10 MVA base is specified below: Fundamental = 1pu, 5th = .2152 pu, 7th = .0734 pu, 11th = .0612 pu, 13th = .0389 pu, 17th = .0259 pu, 19th = .0209 pu, 23rd = .0101 pu, 25th = .0094 pu.
C.	**Temperature Ratings:**	1. Designed for 30°C average ambient and 40°C maximum ambient. Transformer shall have a 65° C rise with a minimum 120° C electrical insulation system.
D.	**Primary Voltage (Source):**	1. 13,200 VAC (Delta)
E.	**Secondary Voltage (Load):**	1. 13,800 VAC (Wye)
F.	**Phases:**	1. 3
G.	**Phase Relationship:**	1. 30° angular displacement with source voltage leading the load voltage
H.	**Frequency:**	1. 60 Hz
I.	**Winding Configuration:**	1. Delta-Wye, with full voltage rated neutral wye connection point available for Government connection of high resistance grounding system.
J.	**Shielding:**	1. An Electrostatic Shield is required between primary and secondary windings.
K.	**BIL:**	1. 13.2KV Winding: 95 kV 2. 13.8KV Winding: 95KV

L.	**Primary Taps & Tap Changer:**	1. The following full capacity taps shall be provided: Nominal, +2½ %, +5%, -2½ %, -5%. 2. The de-energized tap changer shall have an external operating handle, tap position indicator, and a position locking mechanism which can be pad locked.
M.	**Impedance:**	1. 5.75% plus or minus 7.5% tolerance. 2. X/R ratio shall be less than or equal to 20.
N.	**Zero Sequence Impedance:**	1. Shall not be less than positive sequence impedance.
O.	**Magnetizing Inrush Current:**	1. Worst case RMS inrush current including DC offset on the 13.2KV side shall not exceed 10X Full Load Amp Self Cooled Rating of transformer. 2. A time vs current plot shall be provided for inrush current from inception to completion of magnetization. Inrush current profile must be submitted as part of proposal for buyer review.
P.	**Identification:**	1. The transformer shall have a nameplate installed in accordance with the referenced standards.
Q.	**Liquid Insulation System:**	1. Silicone (Fire Point >300°C), High Fire Point Mineral Oil (Fire Point >300°C), or equal is required. 2. Liquid insulation system volume shall not exceed 2200 gallons. 3. Transformer shall be certified as a NON-PCB unit. 4. Cooling Liquid proposed must have a proven history of reliable operation. If cooling liquid has been fielded for less than 3 years, provide data for review as part of the proposal.
R.	**Forced Air Cooling:**	1. Forced air cooling fan(s) shall be rated for (3) phase, 460V operation. Fan control circuits shall utilize 115VAC via seller provided control power transformer. 2. Expected power requirements not to exceed 5 KVA.
S.	**Audible Sound Level:**	1. 68 / 70 decibels maximum (Self cooled / with forced cooling)
T.	**Winding Temperature Sensing:**	1. Transformer winding temperature sensing shall be provided for each phase via thermocouple. 2. Thermocouples shall be wired to a supplied Transformer Winding Temperature Monitor. 3. At least (1) spare thermocouple shall be provided for each winding. 4. Local indication and a normally closed alarm contact (contact open to alarm) for transformer remote over temperature alarm shall be provided. The alarm contact shall also go open (alarm) for loss of monitor

	control power. 5. The temperature monitor shall be powered via the buyer supplied auxiliary power supply circuit (460vac). If Temperature Monitor requires other than 460V, it shall be derived from the 460V auxiliary power supply circuit via seller provided equipment.
U. Protection Relay:	1. A Sudden Pressure Relay or equal shall be provided with a normally open dry contact (contact close on tank pressure increase) to interface with a 13.8KV circuit breaker trip control circuit that is rated for use at 120VAC/120VDC/48VDC.
V. Other Required Local Monitoring Devices:	1. Dial Type Top Oil Thermometer 2. Liquid Level Gauge 3. Pressure Relief Device with Semaphore 4. Tap Changer Position Indicator 5. Pressure Vacuum Gauge
W. Surge Arrestors:	1. Provide transformer with distribution type arrestors on the 13.2KV side of transformer. Arrestors shall have a MCOV of 18KV and shall protect against line transients and possible voltage surge caused by upstream vacuum interrupter.
X. Maximum Footprint to Transformer Extremities:	1. 165" x 130"

5.1.2 Enclosure:

A. Enclosure Type / Tank:	1. Outdoor Operation 2. The transformer shall be operable at the ratings given in this specification under humidity conditions between 0 % and 100 % and with air temperature up to 40°C and with the average air temperature for any 24 hour period not to exceed 30°C. 3. There shall be no exposed live parts that can create a shock hazard if touched. 4. 15 PSI minimum tank design is required with formed base, jacking and rolling provisions. 5. Lifting eyes shall be provided. 6. Stainless steel ground pads shall be provided along at least two lower opposite sides of tank. 7. All gaskets shall be fully compatible with the liquid insulating medium provided. 8. Radiator must have vent and drain plugs.

	9. Radiators shall have all seams welded. 10. Radiators shall have isolation valves and shall be removable via bolted flange in case they must be replaced or repaired. 11. An insulating liquid preservation system shall be provided.
B. Tank Fittings:	1. 2" drain valve with 3/8" sampler valve, 2. 1" upper filter press valve.
C. Line Side (13.2KV) Terminations	1. The bushing terminations shall have a silver plated copper connection area to accept (6) 1/C, 350 MCM copper, 15kV, Shielded, EPR insulation, CPE or PVC jacket, 133% insulation level cables and (2) bare 2/0 copper cables (Two conductors per phase and two ground conductors). 2. Terminations shall be rated at 90 degrees C minimum. 3. Terminations shall accept standard NEMA two hole compression lugs with ½" hardware.
D. Load Side (13.8KV) Terminations:	1. The bushing terminations shall have a silver plated copper connection area to accept (12) 1/C, 350 MCM copper, 15kV, Shielded, EPR insulation, CPE or PVC jacket, 133% insulation level cables and (4) bare 250 MCM copper cables. (Four conductors per phase and four ground conductors). 2. The neutral shall be provided with a full voltage rated bushing which will be utilized with a high resistance ground system. 3. Terminations shall be rated at 90 degrees C minimum. 4. Terminations shall accept standard NEMA two hole compression lugs with ½" hardware.
E. Cable Entry (Main Power Circuits):	1. An air filled, cable terminal compartment on opposite ends of the transformer shall be provided for the Main Power Circuits shown in Figure 1 and discussed above in Line and Load Side Terminations. 2. One Air Terminal Chamber (ATC) shall accommodate the 13.2KV utility source cables and the other end shall accommodate the 13.8KV load cabling. 3. Bottom cable entry shall be provided for each ATC.
F. Cable Entry Auxiliary Power / Controls:	1. A separate enclosure from the Main Power Circuit Air Terminal Chambers shall be provided for connection of the Government provided 460 VAC auxiliary power source for the cooling fans and winding temperature monitor. 2. The same enclosure shall also be available for connection of remote alarm and trip circuits (transformer winding temperature high and sudden

	pressure trip circuit). 3. Wiring and conduit between the auxiliary power / controls enclosure and the individual transformer components is the responsibility of the supplier. 4. If any enclosures require heaters to keep components from being degraded from the effects of moisture, they are required to be provided wired with thermostats so they can be powered from the Government provided 460vac auxiliary power source directly or via provided transformers.
G. Paint:	1. Manufacturer's standard, applied over properly prepared surface. 2. The color shall be light gray ANSI No. 61 outdoor with at least a 3 mil thickness.
H. Ground Bus:	1. A ground bus/ ground pad shall be provided in each air terminal chamber as well as along the exterior of at least two opposite sides of the transformer.
I. Shipping Configuration:	1. Ship transformer oil filled and under pressure. Bushings and radiators should also be installed unless they challenge safe delivery.

5.1.3 Testing:

The certified test report for the specified transformer shall include the following tests.

A. Winding Resistance:	IEEE C57.12.90, Section 5 To be performed on all taps.
B. Polarity and Phase Relation Tests:	IEEE C57.12.90, Section 6
C. Ratio Tests:	IEEE C57.12.90, Section 7
D. No Load Losses and Excitation Current:	IEEE C57.12.90, Section 8
E. Impedance Voltage and Load Losses: **F. Zero Sequence Impedance:**	IEEE C57.12.90, Section 9 Note: Test Data of nominal tap and tap extremes is required. Tap extreme testing can be waived if vendor can provide previous test data from another transformer with the same design. Zero sequence impedance testing is included in case transformer is utilized in the future with a solidly grounded neutral in lieu of resistance grounded neutral.
G. Winding Insulation Resistance :	IEEE C57.12.90, Section 10

H. Core Insulation Resistance:	IEEE C57.12.90, Section 10
I. Insulation Power Factor:	IEEE C57.12.90, Section 10
Dielectric Tests: **J. Impulse** **K. Applied Voltage** **L. Induced Voltage** **M. Partial Discharge**	IEEE C57.12.90, Section 10 Note: Impulse Test can be waived if vendor can provide test data from a similarly designed unit.
N. Temperature Tests:	IEEE C57.12.90, Section 11
O. Audible Sound Level Measurements:	IEEE C57.12.90, Section 13 Note: Sound Level Test can be waived if vendor can provide test data from a similarly designed unit.
P. 3 Phase Capacitance to Ground of 13.8KV Winding:	Provide test data or calculation.
Mechanical Tests: **Q. Lifting & Moving Devices** **R. Pressure** **S. Leak**	Note: Lifting & moving devices and pressure test can be waived if vendor can provide test data from a similarly designed unit.
T. Operation Test:	All auxiliary devices such as fans, temperature monitors, sudden pressure relay, etc. must be tested to show proper operation.
U. Dissolved Gases Test:	Transformer liquid must be sampled after energized testing but prior to shipping to obtain baseline data.

6.0 Technical Data

6.1 Drawings

Final Outline, Detail, and Electrical Drawings are required to include the following information: mounting dimensions, rigging features, space limitations, location of center of gravity and transformer weight with and without liquid, cooling liquid name and quantity, customer interface locations, electrical schematics, wiring diagrams, nameplate data, and inrush current time vs current plot. The Drawings shall be included in the

Technical Manual (6.2). The Government will also approve the Suppliers Drawings to provide a Release for Manufacture.

6.2 Technical Manuals

Three sets of technical manuals shall be forwarded not later than the delivery date of the equipment. Technical manuals shall consist of various technical data including: Drawings (6.1), Special Tools / Equipment (6.3), Recommended Maintenance (6.4), Transformer Certified Test Report (5.13), and any other technical information required to install, operate, or maintain the transformer or its accessories.

6.3 Special Tools / Equipment

A list of special tools / equipment required to put transformer in service shall be provided for Release to Manufacture and shall also be included in the Technical Manual.

6.4 Recommended Maintenance

Recommendations shall be provided on the maintenance to be performed and the frequency of maintenance actions for the equipment specified in this document. Also, a recommended spare parts list with pricing shall be included with the maintenance recommendations. This information shall be provided in the Technical Manual not later than the delivery date of the equipment.

7.0 Inspection and Testing

Testing of the equipment shall be performed by the Supplier as specified in Section 5.1.3. The Government reserves the right to witness Supplier testing and to perform equipment inspections where such inspections are deemed necessary to assure supplies and services conform to the prescribed requirements.

8.0 Shipping

8.1 Packaging

Equipment shall be packed for shipping in a manner that will ensure acceptance and safe delivery at destination. Supplier is responsible for damage during shipment.

8.2 Marking

Each package shall be marked with the Contract Number, Contract Item Number and Purchase Specification Number TS050-02.

8.3 Delivery

The articles to be furnished shall be delivered in accordance with the following:

Item 0001 & 0003: Within 112 days after date of order.
Item 0002: Within 21 days after date of order.

Note: The Government shall review and approve, conditionally approve or disapprove the Documentation furnished under item 0002 within 14 days after receipt or within 35 days after date of order, whichever occurs last.

Items 0001, 0002, & 0003 shall be delivered to:

Naval Surface Warfare Center, Carderock Division
Naval Business Center, Bldg 542
Philadelphia, PA 19112-5083
Attn: Mr. Ed Harvey, Code 934