MIL-M-17060E(SH)
20 May 1977
SUPERSEDING
MIL-M-17060 (SHIPS)
12 January 1972
(See 6.4)

MILITARY SPECIFICATION

MOTORS, 60-HERTZ, ALTERNATING CURRENT, INTEGRAL-HORSEPOWER, SHIPBOARD USE

This specification is approved for use by the Naval Sea Systems Command and is available for use by all Departments and Agencies of the Department of Defense,

1. SCOPE

1.1 Scope. This specification covers the requirements for 60-hertz (Hz), three-phase, integral-horsepower (hp), alternating current (a.c.) motors for shipboard use.

1.2 Classification. Motors shall be of the following services, as specified (see 6.1.1)

Service A - For applications where motors are essential to the military effectiveness of a ship.
Service C - For applications where motors are not essential to the military effectiveness of a ship.

(For designs and types, see 3.1.11.)

2 APPLICABLE DOCUMENTS

2.1 Issues of documents. The following documents, of the issue in effect on date of invitation for bids or request for proposal, form a part of this specification to the extent specified herein.

SPECIFICATIONS

FEDERAL

QQ-B-650 - Brazing Alloy, Copper, Copper-Zinc, and Copper-Phosphorus.
QQ-B-654 - Brazing Alloys, Silver.
QQ-C-390 - Copper Alloy Castings (Including Cast Bar).
QQ-I-666 - Iron, Malleable Ferritic, for Castings.
QQ-T-390 - Tin Alloy Ingots and Castings and Lead Alloy Ingots and Castings (Antifriction Metal) for Bearing Applications.
UU-P-268 - Paper, Kraft, Wrapping.
GGG-P-781 - Puller, Mechanical Puller Attachment, Mechanical, and Puller Set, Mechanical.
PPP-C-850 - Cushioning Material, Polystyrene Expanded, Resilient (for Packaging Uses).
PPP-C-1120 - Cushioning Material, Uncompressed Bound Fiber for Packaging.

Beneficial comments (recommendations, additions, deletions) and any pertinent data which may be of use in improving this document should be addressed to: Commander, Naval Ship Engineering Center, SEC 6124, Department of the Navy, Washington, DC 20362 by using the self-addressed Standardization Document Improvement Proposal (DD Form 1426) appearing at the end of this document or by letter.

FSC 6105

Licensed by Information Handling Services

MILITARY

MIL-M-14 - Molding Plastics and Molded plastic Parts, Thermosettinq.
MIL-S-901 - Shock Tests, H.I. (Hiqh-impact), Shipboard Machinery Equipment and Systems, Requirements for.
MIL-E-917 - Electric Power Equipment, Basic Requirements for (Naval Shipboard Use) .
MIL-S-1222 - Studs, Bolts, Hex Cap Screws and Nuts.
MIL-E-2036 - Enclosures for Electric and Electronic Equipment (Naval Shipboard Use) .
MIL-B-3743 - Brush: Electrical Contact.
MIL-R-6130 - Rubber, Cellular, Chemically Blown.
MIL-S-15083 - Steel Castings.
MIL-P-15137 - Provisioning Technical Documentation for Repair Parts for Electrical and Mechanical Equipment (Naval Shipboard Use).
MIL-E-16298 - Electric Machines, Having Rotating Parts and Associated Repair Parts, Packaging of.
MIL-T-16366 - Terminals, Electric Lug and Conductor Splices, Crimp Style.
MIL-W-16878 - Wire, Electrical, Insulated, High Temperature.
MIL-W-16E78/8 Wire, Electrical, Type FF, 200°C., 1000 volts (Instigated, High Temperature).
MIL-W-16878/9 - Wire, Electrical, Type FFW, 200°C., 1000 Volts (Insulated, High Temperature) .
MIL-L-17331 - Lubricating Oil, Steam Turbine, Noncorrosive.
MIL-P-17840 - Pumps, Centrifugal, Close-Coupled, Navy Standard.
MIL-B-17931 - Bearings, Ball, Annular, for Quiet Operation.
MIL-F-18953 - Fans, Vaneaxial and Tubeaxial, Fixed and Portable, ventilation and Air Conditioning, Naval Shipboard.
MIL-R-20092 - Rubber sheets and Molded Shapes, Cellular, Synthetic, Open Cell (Foamed Latex).
MIL-R-21248 - Rings, Retaining (Tapered and Reduced Section Type).
MIL-I-24092 - Insulating Varnish, Electrical, Impregnating, Solvent Containing.
MIL-I-24137 - Iron Castings, Nodular Graphitic (Ductile Iron) and Nodular Graphitic (Corrosion Resisting, Austenitic, Low Magnetic Permeability) (For Shipboard Application) .
MIL-I-24178 - Insulation Tape, Electrical, Semi-cured Thermosetting Resin Treated Glass, Armature Banding, Naval Shipboard.
MIL-G-24508 - Grease, High Performance, Ball and Roller Bearing.
MIL-W-30508 - Wire, Armature Banding.

STANDARDS

MILITARY

M1L-STD-105 - Sampling Procedures and Tables for Inspection by Attrbutes.
MIL-STD-108 - Definitions of and Basic Requirements for Enclosures for Electric and Electronic Equipment.
MIL-STD-414 - Sampling Procedures and Tables for Inspection by Variable for Percent Defective.
MIL-STD-740 - Airborne and Structureborne Moise Measurements and Acceptance Criteria of Shipbuilding Equipment.

(Copies of specifications, standards, drawings, and publications required by contractors in connection with specific procurement functions should be obtained from the procuring : activity or as directed by the contracting officer.)

2.2 Other publications. The following documents form a part of this specification. to the extent specified herein. Unless otherwise indicated, the issue in effect on date of invitation for bids or request for proposal shall apply.

INSTITUTE OF ELECTRICAL AND ELECTRONICS ENGINEERS (IFFE)

IEEE STD 429 (ANSI C50.26) - Evaluation of Sealed Insulation Systems for AC Electtronic Machinery Employing Form-Wound Stator Coils.
IEEE STD 432 - Guide for Insulation Maintenance Medium and Small Rotating Electrical Machinery (rated less than 10,000 kVA) .

(Application for copies should be addressed to the Institute of Electrical and Electronics Engineers, 345 East 47 Street, New York, NY 10017.)

Licensed by Information Handling Services

AMERICAN SOCIETY FOR TESTING AND MATERIALS (ASTM)
A 133 - Zinc Coating (Hot-Dip) on Iron and Steel Hardware.

(Application for copies should be addressed to the American Society for Testing and Materials, 1916 Race Street, Philadelphia, PA 19103.)

(Technical society and technical association specifications and standards are generally available for reference from libraries. They are also distributed among technical groups and using Federal agencies.)

3. REQUIREMENTS

3.1 General design. Motors shall be capable of being rewound by use of mush wound or preforred coils and without recourse to special equipment beyond that normally available at field electric repair facilities.

3.1.1 Amblent temperatures. Motors shall be designed to operate in an ambient temperature of 50°C unless otherwise specified (see 6.1.1). Where temperatures other than 50°C are specified, they shall be one of the following: 40°C, 65°C, 70°C, and 80°C.

3.1.2 Airborne noise Motors shall operate at all loads and speeds within the service range: without. exceeding specified airborne noise levels (see 3.5.1.10).

3.1.3 Voltage Motors shall be designed for the following voltages, as specified (see 6.1.1).

220 Vac
440 Vac
Special

3.1.4 Voltage limitations. Motors shall meet the performance requirements specified herein when operating on rated voltage. Motors shall also perform satisfactory when voltage deviates 10 percent above or below rated voltage.

3.1.5 Frequency -limitation. Motors shall meet the performance requirements when operatinq dt rated frequency. Motors shall also perform satisfactory when frequency deviates 5 percent above or below rated frequency.

3.1.6 Combined variation in voltage and frequency. Motor shall perform satisfactory . with a combined variation in voltage and frequency of 10 percent above or below rated voltage and frequency provided that the frequency does not exceed 5 percent. In determining compliance with this requirement, both voltage and frequency shall be additive.

3.1.7 Duty. Duty of motors shall be continuous, intermittent, varying, or short-time, as specified (see 6.1.1). Motors of other than continuous duty shall have the duty cycle defined (see 3.1.7.5 and 6.1.1).

3.1.7.1 Continuous duty. Motors rated for continuous duty (see 6.2.1) shall carry rated load continuously at the ambient temperature specified (see 3.1.1 and 6.1. 1) without exceeding allowable temperature rises (see table I and 3.1.30) .

3.1.7.2 Intermittent duty. Motors rated for intermittent duty (see 6.2.2) shall carry rated load for the time duration which will permit operation of the motor indefinitely at the ambient temperature and the cycle of load, no-load, and rest specified (see 3.1.7.5 and 6.1.1) without exceeding the allowable temperature rises (see table I and 3.1.30) . Where intermittent operation is involved and no definite operating cycle can be given, a short-time duty motor of sufficient rating to meet the estimated load and duty cycle requirements shall be required (see 3.1.7.5)

3.1.7.3 Varying duty. Motors rated for varying duty (see 6.2.3) shall carry rated load for the time duration which will permit operation of the motor indefinitely at the ambient temperature and the cycle of varying loads specified (see 3.1.7.5 and 6.1.1) without exceeding allowable temperature rises (see table I and 3.1.30) .

Licensed by Information Handling Services

TABLE I. Maximum permissible temperature rises (°C).

Item	Part	40°C ambient	50°C ambient	65°C ambient				70°C ambient				80°C ambient	
		B, F, H, or N[3]	B, F, H, or N[3]	B	F	H	N	B	F	H	N	H	N
1	Windings other than those specified in item 4:												
	(a) Dripproof protected Method 2	80	70	55	80	100	120	50	75	95	115	85	105
	(b) Totally enclosed fan cooled, spray-tight fan cooled, watertight fan cooled air over vaneaxial fan motors Method 2	80	70	55	80	100	120	50	75	95	115	85	105
	(c) Others Method 2	85	75	60	85	115	125	55	80	110	120	95	105
2	Cores and mechanical parts in contact with or adjacent to the insulation:												
	(a) Motors specified under 1(a) Method 1	70	60	45	70	90	110	40	65	85	105	75	95
	(b) Motors specified under 1(b) and 1(c) Method 1	75	65	50	75	100	120	45	70	95	115	85	105
3	Collector rings:												
	(a) If class B insulation is employed in collector rings	85	75	60	-	-	-	55	-	-	-	-	-
	(b) If class H or N insulation is employed in collector rings	-	-	-	-	100	120	-	-	95	115	85	105
4	Bare copper windings and singlelayer field windings with exposed uninsulated surfaces:												
	(a) Motors specified under 1(a)	80	70	55	80	105	125	50	75	100	120	90	110
	(b) Motors specified under 1(b) and 1(c)	85	75	60	85	110	130	55	80	105	125	95	115
5	Bearings, ball[1/2]	70	60	45	45	85	85	40	40	80	80	70	70
	Bearing sleeve, imbedding thermocouple	53	43	-	-	-	-	-	-	-	-	-	-
	Bearing oil, sump	42	32	-	-	-	-	-	-	-	-	-	-

See footnotes on next page.

Licensed by Information Handling Services

NOTES: 1. Squirrel cage and amortisseur Windings and mechanical parts may attain such temperatures as will not injure the motor in any respect.
2. Bearinq temperatures measured on bearinq outer race or in the lubricant.
3. Maximum, allowable temperature rise regardless of class of insulation material used.

3.1.7.4 Short-time duty. Motors rated for short-time duty (see 6.2.4) shall carry rated load which, starting at the ambient temperature, can be carried constantly for the period specified (see 3.1.7.5 and 6.1.1) without exceeding allowable temperature rises (see table I and 3.1.30).

3.1.7.5 Duty cycle. Motors other than those rated for continuous duty shall conform to the specified duty rating as delineated by the following applicable requirements as specified:

(d) Number of starts.
(b) Number of plug stops.
(c) Number of direct current (d.c.) dynamic braking stops.
(d) Number of plug reversals.
(e) Connected inertia at shaft speed.
(f) Starting torque.
(g) Acceleration torque.
(h) Periods of running.
(1) Condition of loads during running, including no load conditions.
(j) Time frame for *one* complete duty cycle, (a) through (i).
(k) The maximum periods and sequence of times the duty cycle (a) through (i) will be imposed in a 24-hour period.

3.1.7.5.1 In applications where the duty cycle may be worsened by operator control or by change in equipment operation mode, which could result in exceeding motor thermal limits mechanically or electrically, the motor shall then be provided with the following thermal Protection:

(a) A minimum of 3 imbedded integral thermal temperature detectors.
(b) The signal from operation *of* the temperature sensing network at the set point shall be capable of energizing an alarm or de-energizing the motor control.

3.1.8 Enclosures. Enclosures shall conform to MIL-E-2036 and shall be one of the following as-specified (see 6.1.1) (for submarine applications see 3.5.4.1) :

Dripproof protected - DPP	Totally enclosed fan-cooled - TEFC
Spraytight - SPT	Explosionproof, group D - EXP
Spraytight fan-cooled - SPTFC	Explosionproof fan-cooled, group D - EXPFC
Watertight - WT	Submersible (15 foot) SUB 15
Watertight fan-cooled - WTFC	Submersible (50 foot) SUB 50
Totally enclosed - TE	

3.1.9 Standardization. Except for submarine service and low noise application on surface ships, squirrel cage induction motors shall be in accordance with the standardization requirements shown on figures 1 through 4. These motors shall be designated by designation "T". Close-coupled pump motors shall be in accordance with MIL-P-17840. Vaneaxial fan motors shall be in accordance with MIL-F-18953. For applications where the use of standard motors is not practical, nonstandard motors may be proposed, to the procuring activity. For non-standard motors, the requirements of figures 1 through 4 and MIL-P-17840 shall be used as a guide with respect to the frame and bearing size requirements.

3.1.9.1 Standard hp sizes. Motors shall be furnished in the following standard hp sizes, as required (see 6.1.1) :

1/2	5	30	125	400
3/4	7-1/2	40	150	450
1	10	50	200	500 and above
1-1/2	15	60	250	
2	20	75	300	
3	25	100	350	

Licensed by Information Handling Services

3.1.10 Speed. The rated speed in revolutions per minute (r/rein) or rated speed range in r/rein shall be as specified (see 6.1.1) . The speed shall be constant, multi, adjustable, varying, or adjustable varying as specified (see 6.1.1 and 6.2.5 through 6.2.10).

3.1.11 Design and type. Motors shall be designed for the following types, as specified (see 6.1.1,6.2.13 through 6.2.15, and 6.2.18 through 6.2.18.6).

Squirrel-cage induction:
- Design A.
- Design B.
- Design C.
- Design D.
- Design F.
- Design FF.

Wound-rotor, induction:
- Collector-ring starting.
- Collector-ring starting and running.

Synchronous.

3.1.12 Torque and current limitations.

3.1.12.1 Single-seed motors only. Motors shall be design A, B, C, D, F, or FF as specified (see 6.1.1). Values specified herein, apply only to constant speed, single-speed, squirrel-cage motors.

3.1.12.1.1 Locked-rotor torque.

3.1.12.1.1.1 Designs A and B. The locked-rotor torque of designs A and B motors, with rated voltage and frequency and applied, shall be not less than the values specified in table II, which are expressed in percentage of full-load torque.

TABLE II. Locked-rotor torque, designs A and B.

Hp	Synchronous speeds, r/min						
	3600	1800	1200	900	720	600	514
1	175	250	165	130	130	115	110
1-1/2	170	235	160	130	125	115	110
2	160	215	155	130	125	115	110
3	150	185	150	130	125	115	110
5	140	175	150	125	120	115	110
7-1/2	135	165	150	125	120	115	110
10	130	160	140	125	120	115	110
15	130	150	135	125	120	115	110
20	130	150	135	125	120	115	110
25	130	150	135	125	120	115	110
30	125	140	135	125	120	115	110
40	120	140	135	125	120	115	110
50	120	140	135	125	120	115	110
60	105	140	135	125	120	115	110
75	105	125	125	125	120	115	110
100	100	110	125	120	115	115	110
125	100	110	125	120	115	115	-
150	100	100	120	120	-	-	-
200	70	80	100	100	-	-	-
250	70	80	100	100	-	-	-
Over 250	70	80	-	-	-	-	-

Note: Locked-rotor torque, for 3600 r/min motors driving centrifugal pumps, may be reduced to a minimum of 70 percent of full-load torque.

3.1.12.1.1.2 Design C. The locked-rotor torque of design C motors, with rated voltage and frequency applied, shall be not less than the values specified in table III, which are expressed in percentage of full-load torque.

Licensed by Information Handling Services

TABLE III. Locked-rotor torque, design C.

Hp	Synchronous speeds, r/min		
	1800	1200	900
1	---	---	---
1-1/2	---	---	---
2	---	---	---
3	---	250	225
5	250	250	225
7-1/2	250	225	200
10	250	225	200
15	225	200	200
20	200	200	200
25 through 200	200	200	200

3.1.12.1.3 Design D. The locked-rotor torque of design D, 4, 6, and 8-pole motors, with rated voltage and frequency applied, shall be not less than 275 percent of full-load torque.

3.1.12.1.1.4 Design F. The locked-rotor torque of design F, 4 and 6-pole motors, rated 30 hp and larqer, with rated voltage and frequency applied shall be not less than 125 percent of full-load torque.

3.1.12.1.1.5 Design FF. The locked-rotor torque of design FF motors,- with rated voltage and frequency applied, shall be not less than 115 percent nor more than 155 percent, expressed in percentage of full-load torque.

3.1.12.2 Locked-rotor current. The locked rotor current for dripproof protected motors shall not exceed the values specified in table IV. For motors in enclosures other than dripproof protected, the locked-rotor current may exceed the values of table IV by no more than 10 percent. Locked-rotor current limits are specified for 440 Vat, For other than 440 Vac motors, the ratio of current limits shall be inversely proportioned to the ratio of applicable voltages. Motors shall be designed to withstand a locked-rotor current test for 20 seconds (see 4.3.4.10).

TALBE IV. Locked-rotor current, amperes, maximum.

Hp	Designs B, C, and D (see notes 1 and 2)
1	15.7
1-1/2	20.9
2	26.1
3	33.4
5	48
7-1/2	66.4
10	84.7
15	121
20	152
25	191
30	227
40	303
50	379
60	455
75	567
100	758
125	949
150	1,135
200	1,516
250	1,909

Notes:
1. Design C - 3 hp through 200 hp only 1800, 1200, 900 r/min.
2. Design D - Through 150 hp only, 1800, 1200, 900 r/min.

Licensed by Information Handling Services

3.1.12.2.1 The locked-rotor current of design FF motors under the conditions specified in 3.1.2.2 shall not exceed 67 percent of that specified for designs B, C, and D.

3.1.12.3 Pull-up torque. Except for submarine and low noise surface ship centrifugal pump application pull-up torque of designs A, B, and C continuous duty motors with rated voltage and frequency applied shall be not less than rated full-load torque. With rated voltage and frequency applied, the pull-up torque of design FF motors shall be not less than 115 percent of full load torque.

3. 1.12.4 Breakdown torque. Breakdown torque of the motors with rated voltage and frequency applied, shall be in accordance with the values specified in table V which are expressed in-percent of full-load torque.

TABLE V. Breakdown torque

Hp	Synchronous speeds r/min	Breakdown torque Percent of full-load torque (min.)	
		Design B	Design C
1/2	720	200	--
3/4	1200	275	--
	900	220	--
	720 and lower	200	--
1	1800	300	--
	1200	265	--
	900	215	--
	720 and lower	200	--
1-1/2	3600	250	--
	1800	280	--
	1200	250	--
	900	210	--
	720 and lower	200	--
2	3600	240	--
	1800	270	--
	1200	240	--
	900	210	--
	720 and lower	200	--
3	3600	230	--
	1800	250	--
	1200	230	225
	900	205	200
	720 and lower	200	--
5	3600	215	--
	1800	225	200
	1200	215	200
	900	205	200
	720 and lower	200	--

Licensed by Information Handling Services

TABLE V. Breakdown torque - Continued.

Hp	Synchronous speeds r/min	Breakdown torque Percent of full-load torque (minimum)	
		Design B	Design C
7-1/2	3600	200	--
	1800	215	190
	1200	205	190
	900	200	190
	720 and lower	200	--
10	3600	200	--
	1800	200	190
	1200	200	190
	900	200	190
	720 and lower	200	--
15 to 25	All speeds	200	190
30 to 200	All speeds	200	190
250 and larger	All speeds	175	--

3.1.12.5 With rated voltage and frequency applied, the breakdown torque of design FF motors shall he not more than 225 percent expressed in percentage of full-load torque.

3.1.12.6 Slip Unless otherwise specified (see 6.1.1) design A, B, C, and F motors shall have a slip at rated load of less than 5 percent, except for design A and B motors with 10 or more poles which shall have a slip no greater than 6 percent. Design D motors shall have a slip at rated load between 5 and 13 percent of rated speed. (For slip for pump motors see 3.5.3).

3.1.12.7 Multispeed motors. Unless otherwise specified [see 6.1.1) multispeed motors in which any of the speeds are obtained by reconnecting the windings or by separate windings, shall be In-accordance with 3.1.12.7.1 and 3.1.12.7.2.

3.1.12.7.1 Two speed motors. Locked-rotor current, torque. and slip requirements shall be in accordance with the values specified in table VI.

TABLE VI. Locked-rotor current, torque and slip for mulispeed motor, design B,

1 winding 2 speed
2 winding 2 speed
(2, 4, 6, 8, 10 and 12 poles)

Speed characteristics	Constant torque		Variable torque		Constant Hp	
	1 winding	2 winding	1 winding	2 winding	1 winding	2 winding
Locked-rotor current (maximum)						
High speed	20 percent over table IV	20 percent over table IV	40 percent over table IV	20 percent over table IV	20 percent over table IV	20 percent over table IV
Low speed	20 percent over table IV	20 percent over table IV	20 percent over table IV	20 percent over table IV	20 percent over table IV	20 percent over table IV
Locked-rotor torque (percent full-load torque) (minimum)						
High speed	Table II	Table II	Table II	Table II	120 percent	Table II
Low speed	Table II	Table II	100 percent	Table II	Table II	Table II

Licensed by Information Handling Services

TABLE VI, Locked-rotor current, torque and slip for multispeed motors, design B- Continued.

Speed characteristics	Constant torque		Variable torque		Constant Hp	
	1 winding	2 winding	1 winding	2 winding	1 winding	2 winding
Pull-up torque (percent full-load torque) (minimum)						
High speed	100 percent	100 percent	100 percent	100 percent	100 percent	100 percent
Low speed	100 percent	100 percent	100 percent	100 percent	100 percent	100 percent
Breakdown torque (percent full-load torque) (minimum)						
High speed	Table V	Table V	Table V	90 percent of table V	175 percent	90 percent of table V
Low speed	Table V	Table V	150 percent	Table V	Table V	Table V
Slip (maximum)[1/]						
High speed	5 percent	5 percent	5 percent	5 percent	5 percent	5 percent
Low speed	5 percent	5 percent	5 percent	5 percent	5 percent	5 percent

[1/] For 2, 4, 6 and 8 pole, only.

3.1.12.7.2 Multi speed motors of more than two speeds. Motors with more than two speeds shall be as approved by the procuring activity.

3.1.12.8 Synchronous motors. Synchronous motors shall be capable of making two starts in succession without damage to any part. Torques with rated voltage applied at rated frequency shall be not less than the percentages of full-load torque specified in table VII.

TABLE VII. Normal torques-synchronous motors

Speed, r/min	Hp	Power factor	Torques, for percent of rated full-load torque		
			Locked-rotor	Pull-in (based on normal WK^2 of load)[1/2/]	Pull-out[2/]
500 to 1800	200 and below	1.0	100	100	150
	150 and below	0.8	100	100	175
	250 to 1000	1.0	60	60	150
	200 to 1000	0.8	60	60	175
	1250 and larger	1.0	40	60	150
		0.8	40	60	175
450 and below	All ratings	1.0	40	30	150
		0.8	40	30	200

[1/] For values of normal WK^2 of load.

[2/] With rated exciting current applied.

3.1.13 Electrical balance. Amperes in any phase at rated load shall not differ from the arithmetic average of the maximum and minimum phase amperes by more than 10 percent for motors rated 1-1/2 hp and under; by more than 7-1/2 percent of motors rated 2 hp and 3 hp; and by more than 5 percent for motors over 3 hp (for submarine applications, see 3.5.4.10).

3.1.14 Dielectric strength. When tested in accordance with MIL-E-917, motors shall withstand dielectric test voltages specified in table VIII.

Licensed by Information Handling Services

TABLE VIII. Dielectric test voltages

Part	Test voltage	Minimum duration
Secondary windings of wound rotors:		
Nonreversing	1,000 plus twice normal induced voltage on open circuit	1 minute
Reversing, while running at approximately normal speed by reversing the primary connections.	1,000 plus four times normal induced voltage on open circuit.	1 minute
Field windings of synchronous motors:		
To be started with the field short circuited	Ten times the excitation voltage, but not less than 2,500 nor more than 5,000 volts.	1 minute
To be started with the field open-circuited and sectionalized	1.5 times the maximum r/min voltage which can occur between the terminals of any section but in no case less than 2500 volts or 10 times the rated excitation voltage per section, whichever is the larger.	1 minute
All others:		
Motors rated more than 600 volts	2,000 plus 2.25 times rated voltage.	1 minute
Motors rated 600 volts	1,000 plus twice rated voltage or 1,200 plus 2.4 times rated voltage	1 minute 1 second

3.1.15 Mechanical balance. Motors shall be balanced at any load and speed in the operating range. Windings not in mechanical symmetry shall have dummy coils. In general, the proper mechancial balance shall be effected by the use of balance weights securely attached, (if bolts are used, corrosion-resistant bolts and locknuts shall be used) , removal of material, securely welded steel weights, or by metal carried in a receiver in such a manner as to preclude its breaking loose. Balancing by the use of solder on the banding wire is permissible subject to the following limitations:

(a) Diameter of the rotor not to exceed 16 inches.
(b) Peripheral speed not to exceed 6,500 feet per minute at rated load.
(c) Armature cores to be balanced before the windings are inserted.
(d) Only tinned banding wire shall be used.
(e) The solder not to cover an arc of more than 25 percent of the circumference of the armature measured on the banding wire unless satisfactory to the command or agency concerned. Where the manufacturer prebalances the armature and takes care in placing the windings in the slots to reduce unbalance due to the axial misalinement of the coils, this value may be increased to 33 percent if satisfactory to the command or agency concerned.
(f) Thickness of solder over banding wire not to exceed 3/32 inch, and *in no* case to extend past the center of the air gap.

(See 3.5.1.9 for service A motors 3.5.4.7 for submarine requirements and 3.5.5.2 for low *noise* surface ship applications.)

3.1.15.1 Armature and coil banding using glass. Semi-cured thermosetting resin treated glass insulation tape may for armature and coil banding in lieu of steel wire banding. Glass banding materials and methods of application shall be in accordance with MIL-I-24178.

3.1.16 Field coils. Field coils shall be thoroughly insulated from adjacent, conducting and grounded parts. Field coils shall be secured to prevent motion of the coil with respect to the poles, or other parts, when the motor is operating under the specified conditions. Field coils of the same type shall be interchangeable.

Licensed by Information Handling Services

3.1.17 Collector rings (where used).

3.1.17.1 Material. Collector rings , where used , shall be of copper , brass, bronze corrosion-resistlnq steel. Rinqs shall run true, have a smooth polished surface, and be free from porosity or hard spots.

3.1.17.2 Construction. Rings, with their insulation, shall be of thoroughly solid construction throughout to insure against their becoming loosened or eccentric throughout the life of the motor. They shall be secured to the shaft or spider by keying, or by interference as specified in table IX. The method employed shall prevent both rotational and axial movement under test and operatinq conditions. Minimum interference fits for ring assembly, shell to shaft, shall be as-shown in table IX.

TABLE IX. Fit of collector ring assembly.

Shaft diameter at collector ring assembly section	Minimum interference fit
Inches	Inch
Over 0 to 2, inclusive	0.0003
Over 2 to 3, inclusive	.0006
Over 3 to 4, inclusive	.0009
Over 4 to 5, inclusive	.0013
Over 5 to 6, inclusive	.0015
Over 6 to 7, inclusive	.0019
Over 7 to 8, inclusive	.0024
Over 8 to 9, inclusive	.0028
Over 9 to 10, inclusive	.0037
Over 10 to 11, inclusive	.0042
Over 11 to 12, inclusive	.0046
Over 12 to 13, inclusive	.0051
Over 13 to 14, inclusive	.0056
Over 14 to 15, inclusive	.0061
Over 15 to 16, inclusive	.0065
Over 16 to 17, inclusive	.0070

3.1.17.3 Wearing depth. The minimum wearinq depth of collector rings, where used, shall be as shown in table X.

TABLE X. Minimum wearing depth of collector rings.

Collector ring diameter	Reduction in diameter
Inches	Inch
4 and under	1/4
Over 4 up to 6, inclusive	1/2
Over 6 up to 8, inclusive	5/8
Over 8 up to 12, inclusive	3/4
Over 12 up to 15, inclusive	7/8
Over 15	1

3.1.19 Brush rigging.

3.1.18.1 Accessibility. Brush holders shall be readily accessible for adjustment, replacement or renewal of brushes and springs. It shall not be necessary to remove the end brackets to replace or adjust the brush holders or brushes.

3.1.18.2 Mounting of collector ring brush holders. Collector ring brush holders may be mounted on insulated studs attached to the end brackets.

3.1.18.3 Alinement. Brush holder shall be mounted and alined so that brushes are parallel to the shaft and do not extend beyond the edge of the collector rinq.

3.1.18.4 Clearance. The brush holder or brush rigging shall be adjustable so that the optimum clearance between the brush holder and collector ring can be maintained throughout the useful life of the collector ring.

Licensed by Information Handling Services

3.1.19 Mounting. (Motors shall be designed for mounting either in horizontal or vertical position as specified (see 6.1.1) . Mounting feet or flanges as specified (see 6.1.1) shall have machined mounting surfaces and shall be provided with round holes for mounting bolts, the design of the end shields for horizontal motors shall provide for rotation through 90 to 180 degrees to permit deck, bulkhead and overhead mounting. The lubrication system shall be designed to provide adequate lubrication of bearings for the specified mounting position. (per submarine application see 3.5.4.2.)

3.1.20 End shields (explosionproof and explosionproof fan-cooled excluded) . An accurate shoulder joint shall be provided between the frame and end shields. Resilient-gaskets shall not be placed between any bearing support member and the frame in such a manner as to affect the alinement of the bearing. Contact surfaces between the motor frame and end shield shall be free from fins, burrs, or other imperfections. In the case of spraytight, watertight or submersihle motors, a tight metal to metal fit *or "O"* rings secured and treated with graphite on the contact surface to prevent sticking shall be used to prevent the entrance of water. Where the former method is used no sealants shall be permitted.

3.1.20.1 General . End .shields shall be secured to the frame with not less than four hexaqonal heal or socket-head screws or bolts. Motor design shall be based on the use of bolts or screws of tensile strength, not greater than that for grade 5 as specified in MIL-S-1222. Through bolts may be used to secure the end brackets to the frame of motors built in a frame size 215 or smaller, except for explosionproof enclosures. For motors with brushes, the openings of adequate size and number shall be provided so as to give easy access to and a dircct view of collector rings and brushes while the motor is in operation. These openings shall be provided with substantial transparent plastic covers and fastenings. Enclosing covers (hand-hole or access-hole *covers)* shall be readily removable. Engaging bolts or locking devices shall be attached to the frame, the end shield, or the covers as the design permits in such manner as to prevent the bolts or locking devices from being misplaced or dropped into the machine during repair operations. Ready access shall be provided to permit the measurement,ent of the air gap in at least four places approximately 90 mechanical degrees apart on both ends of motors equipped with sleeve bearings. Motors shall be provided with a means to permit easy removal of end shields by any of the following methods:

(a) Knock off lugs integral with end bracket.
(b) Holes drilled and tapped in end shield for use of jacking bolts.
(c) Recess in frame to permit contact of drift with end shield flange.

(For additional requirements for submarine applications see 3.5.4. 12.)

3,1.20. 1,1 Vertical fan-cooled motor covers. Vertical fan-coiled motors shall be furnished with a solid over the fan assembly to prevent personnel injury and to prevent foreign particles from falling into the fan. The fan intake shall be provided with openings such that. a 0.50 inch diameter rod will not pass through the opening. The cover shall also contain a hole with a removable plug over the shaft center to facilitate speed measuring as specified in 3.1.22.4. The removable plug shall be attached to the fan assembly cover in such a manner as to prevent misplacement. Design of the hole and plug shall be as delineated in 3.1.22,4,

3.1.20.2 Aluminum end shields and frames. Except for non-magnetic applications, aluminum alloys shall none used for motor frames or end shields, Where used, aluminum end shields shall not support the total weight of the motor driven auxiliary. Steel inserts shall be provided for all threaded positions and bearing housings.

3.1.21 Shafts. A shaft extension with keyway shall be provided and shall be in accordance with shown on figures 1, 2, 3, and 4 as applicable, and MIL-P-17840. (For submarine applications, see 3.5.4.11.)

3.1.22 Bearings,

3. 1.22.1 Types of bearings. Unless sleeve bearings are specified (see 6.1.1) , motors shall be furnished with ball bearing.

3. 1.22.2 Ball bearings. Where ball bearings are used, the requirements specified in 3. 1.22.2.1 through 3.1.22.2~5 shall apply.

3. 1.22.2.1 Grease cups and drains. Compression cups, pipes, where necessary, and drains shall be used where grease ia a means of lubrication and relubrication of bearings is required. Cups shall be furnished as an onboard repair part item (see table XI). The grease cup shall not he mounted on the motor and the threaded hole used to attach the grease cup shall be provided with a pipe plug. Inlet grease pipes, where used, shall be left on

Licensed by Information Handling Services

the motor and the end fitted with a pipe plug. The grease inlet shall be located on the top of the bearing housing for horizontal motors, and to any convenient location to the grease chambers on top of bearing for vertical motors. Crease outlets shall be located in positions which will afford maximum purging of grease during reqreasing operation.

TABLE XI. Onboard repair parts.

Item	Repair parts applicable to the motor installed	Quantity per set: Number of components							
		1	2	3	4	5-8	9-20	21-50	51-100
1	Rotor or armature complete with shaft, surface ships only								
	(a) Close coupled pumps	1	1	1	1	1	1	1	2
2	Bearings, or bearing linings, sets (sleeve bearings shall be complete with oil discs)	1	1	1	1	2	3	4	5
3	Brushes, sets (collector ring)	2	3	4	4	5	6	8	12
4	Brush-rigging insulation sets	1	1	1	1	1	1	1	2
5	Brush holders (complete with springs)	1	1	1	1	1	1	1	2
6	Brush holder springs	2	3	4	4	5	6	8	12
7	Friction type (rubbing) seals, sets, where permitted	1	1	1	1	2	3	4	5
8	Capacitors, sets	1	1	1	1	1	1	1	2
9	Grease compression cups (where used), each size and type	1	1	1	1	1	1	1	2
10	Additional repair parts required for gear motors (gear end only):								
	(a) Bearings sets	1	1	1	1	1	1	1	2
	(b) Friction type (rubbing) seals, sets, where permitted	1	1	1	1	2	3	4	5
	(c) Sets of gears[1/]	1	1	1	1	2	3	4	5
11	Spacers or adapters to remove bearing by inner race	1	1	1	1	1	2	2	2

1/ If any gear is not readily removable from its shaft, the shaft shall be furnished with year installed as a repair part.

3.1.22.2.2 Grease lubricant seals. Except where double sealed ball bearings are used, the housing shall provide for a close clearance running seal on bet}] sides of the bearings to prevent the leakage of oil or grease along the shaft.

3.1.22.2.3 Housing construction. Bearing housing shall be constructed to permit ready removal of the end shield without the necessity of removing the bearings.

3.1.22.2.4 Lubrication and preservation. Where grease lubrication is used, the correct amount lubricant shall be added to the motor grease reservoir and piping before the motor leaves the place of manufacture. The grease shall be in accordance with MIL-C-24500. Where oil is the lubricant, the bearings shall be preserved with preservative compatible with operating lubricant.

3.1.22.2.5 Removal of bearing. Design shall permit removal of the ball bearing by pulling on the inner race of the bearing with one of the tools contained In a "complete" Naval shipboard set of tools specified in CSG-P-781. Where special spacers or adapter are required, they shall be provided as specified (see table XI) .

3.1.22.3 Sleeve bearings and lubricated ball bearings (as applicable)

3.1.22.3.1 General. Motors having rotors weighing less than 200 pounds may use either split or solid bushing type sleeve bearings, Split cylindrical sleeve bearings shall be used for rotor weights in excess of 200 pounds. Sleeve bearing desiqn shall be such that unit loads do not exceed 150 pounds per square inch (lb/in^2) and the length to diameter ratio does not exceed one. Bearings shall be either babbit faced, bronze backed or solid bronze. Babbitt shall be grade 1 or 2 of QQ-T-390 and bronze shall be in accordance with QQ-C-390.

Licensed by Information Handling Services

3.1.22.3.2 Lubrication of sleeve bearings. sleeve bearing shall be lubricated by an (efficient means of a self contained gear, disc, viscous pump, or forced feed lubrication system as required.

3.1.22.3.2.1 Oil discs. The number of oil discs shall be such that no disc is required to distribute lubricant for an axial distance greater than 3 inches on either side of the disc.

3.1.22.3.2.2 Bearing housing. The housing shall provide for a close clearance metallic seal on both sides of the bearings to prevent the leakage of oil along the shaft under all renditions of pitch, roll or shock. This is in addition to the deflection flanges or slingers required on the shaft. Provision shall be made to insure against the suction of oil vapor into the interior of the motor. Provision shall also be made for observation of the disc scrapers and pumps. These openings shall be oiltiqht and have a cover secured by a positive lock and gasket. surface area and oil sump volume shall be adequate to transfer the heat generated in the bearing. Forced water or air cooling may be used. Sump oil temperatures shall not exceed 82°C and bearing surface temperature may not exceed 122°C. Rearing seats shall be line bored to produce good bearing alinement. The bearing bore centerline shall not deviate by more than 20 percent of the bearing clearance.

3.1.22.3.2.3 Filling. An opening or standpipe for filling, for preventing overfllling, and for indicating the oil level shall be provided in the reservoir and shall be fitted with an oiltight plug or cap to prevent the escape of oil due to the motion of the ship. Positive venting shall. be provided to assure pressure equalization in the motor, The diameter of the filling opening shall be not less than 1/4 inch for machines built in frames of motors corresponding to 3 hp, continuous rating of 1,800 r/rein, and not less than 3/8 inch for larger machines.

3.1.22.3.2.4 Threads, Straight threads shall be used on all plugs and fittings.

3.1.22.3.2.5 End play (sleeve hearings only). To insure floating of the shaft in horizontal sleeve bearing motors, here shall be at least 1/64 *inch* end play in either direction.

3.1.22.4 Provision for measuring speed (explosionproof and explosionproof fan-cooled excluded) . In motors having a single shaft extension, provision shall be made for the measurement of speed with a hand type tachometer. This may be accomplished either by extending the shaft flush with (or slightly beyond) the outer face of the bearinq housing, or by providing a hole and a plug in the outer end of the bearing housing. When a hole and plug are provided in the end of the bearing housinq, the hole shall be threaded and not smaller than 9/16 inch diameter, and the design shall be such that the threaded plug cannot. be inserted in the housing to such a depth that the plug will interfere with the end of the shaft. A lathe center or other suitable hole shall be provided in the end of the shaft for the insertion of the tachometer tip.

3 1.22.5 Direction of rotation. Unless otherwise specified in the contract or order, motor shall be inherently eversible (designed for operation in either direction) . Inherently nonreversible motors and motors driving nonreversible auxiliaries shall be equipped with permanent]y mounted identification plates to indicate the direction of rotation when viewed from the end of the motor opposite the normal drive shaft. A note certifying the direction of rotation shall appear on the applicable certification data.

3.1.23 Rotor and stator core.

3.1. 23.1 Securing core to shaft. Provisions shall be made to prevent rotation of the core on the–shaft axial displacement of the core along the shaft. Keys or keys in con-junction with press or shrink fits shall be provided to prevent rotation of the core around the shaft. Press or shrink fits without keys to secure the core on the shaft to prevent axial or rotational movement of the core shall be as reviewed by the command or agency concerned . Tack welding in conjunction with other means (press or shrink interference fits) will be permissible to prevent axial displacement of the core along the shaft.

3.1.23.2 Securing stator core to frame. Means shall be provided to prevent rotation of the core in the frame–and axial displacement of the core along the frame.

3.1.24 Terminal boxes and terminal box covers. Terminal boxes and covers shall be provided and shall be securely bolted or welded to the frame. Use of pipe nipples where they are necessary or where motors are to be used in inaccessible locations shall be satisfactory to the command or agency concerned. Terminal boxes shall be provided with conduit openings

Licensed by Information Handling Services

as specified in table XII. (For submarine applications see 3. 5.4.4.) For two speed motors, one conduit opening of the size indicated in table XII shall be provided for each hp rating. For motors rated over 250 hp, the conduit openinqs shall be sized to suit the number and diameter of ship's cables specified (see 6.1.11 .

TABLE XII. NPT assignments for motor terminal boxes - nylon tubes. 1/

Maximum full-load amps	NPT	Tube size	Hp
18	3/4	2	1,2,3,5, and 7-1/2
25	1	3	10,15,20,25, and 30
110	1- 1/2	5	40,50,60, and 75
185	2	6	100 and 125
250	2- 1/2	7	150
320	3	8	200
400	3- 1/2	9	--

Current will determine NPT

1/ NPT sizes are based on the maxinum expected 3 conductor cable size. If cable size is determined so that a smaller NPT hole ran be used, the hole size may be reduced to the next lower size by use of a reducing bushing which will be inserted by the installing activity. Also, if steel tubes are used, the installing activity shall provide the proper size reducing bushing to fit the steel tube used.

3.1.25 Connections and terminals.

3.1.25.1 Securing connections. Mechanical and electrical, connections shall be provided with locking devices in accordance with MIL-E-917. Connections and leads shall be secured in a reliable manner to prevent their coming in contact with moving parts or being chafed by contact with stationary parts. Excess solder shall be removed from soldered connections.

3.1.25.2 Field connections. In general, and where practicable, field connections shall be made on the front end. In split-frame motors, the field connections which shall be broken for Disassembly shall be readily accessible.

3.1.25.3 Securing terminal leads. Terminal leads shall not be attached to the end shields.

3.1.25.4 Cable connectors. The end of each motor lead shall be fitted with a connector for joining the motor lead to the supply circuit cable or wire. Power cables and their terminal lugs for connecting motor leads to power cables shall not be supplied by the manufacturer.

3.1 25.5 Flexible leads. Terminal leads shall be made of flexible, stranded insulate? wire. Means shall be provided to prevent abrasion of the lead insulation by metallic edges of the motor frame, terminal box, piping, or cable clamp.

3.1.26 Frame, rotor and lead marking The manufacturer's serial number shall be stamped or otherwise permanently marked in the solid metal of the frame underneath (covered by) the main identification plate. The part number, or other information sufficient to completely identify one rotor, shall be stamped or otherwise permanently marked on the shaft or rotor core. Marking of armatures and field coils shall identify the manufacturer and the style and type of motor. Motor leads shall be permanently marked in accordance with MIL-E-917, except that markings shall be either directly on the lead insulation or on the insulating sleeve fitted over the lead. Markings shall not be made only on the terminal lugs where they may be hidden by the connecting belts.

3.1.27 Electromagnetic interference. Design of the motors shall insure a minimum amount of electromagnetic interference.

Licensed by Information Handling Services

3.1.28 Painting. Painting shall be in accordance with MIL-E-917.

3.1.29 Lifting means. Means shall be provided for lifting motors weighing 150 pounds and over.

3.1,30 Class of insulation. Insulation shall be in accordance with MIL-F-917 and shall be class B, F, H, or N. The temperature limitation for insulation system and other parts of the motor shall be in accordance with table I. Where ambient temperatures of 40°C and 50°C are specified, the winding temperature rise and other parts shall be limited to the temperatures assigned to class B regardless of the class of insulation used in the construction of the motor. Magnet wire shall be copper in accordance with MIL-E-917.

3.1. 30.1 Slot cell insulation. Slot cell shall be folded under the slot wedge if flat wedge is used, inserted inside the slot wedge if formed (curved) wedge is used. The wedge shall extend the full length of the slot and extend past the iron a minimum of 1/4 inch. The wedge shall be positioned so as to completely cover the slot cell. For motors in frame sizes 215 or smaller, the flat or curved wedges may be inserted inside the slot cell, and in such cases, the following conditions shall apply:

(a) The slot wedge shall extend the full length of the slot cell and shall completely *cover* the windings and close the slot necks.
(b) The wound stator shall be given a minimum of four varnish dips and bakes.
(c) Demonstration of the adequacy of the insulation system for intended service by the same suitability test as required by appendix of MIL-E-917 for class H insulation (see 4.6) . Suitability test results shall be reviewed by NAVSEC prior to manufacturing of motors.

3.1.31 Motors for severe environmental service. Where specified (see 6.1.1), motors for operation in environmental service condition such as exposure to occasional salt spray, splashing, salt laden atmosphere or submergence shall be provided with sealed insulation system and shall conform to 3.1.31.1 through 3.1.31.2.3.

3.1. 31.1 Sealed insulation s stem. The sealed insulation system (see 6.2.22) shall be either applied to random wound or form wound coils in such a manner as to meet the criteria of 30.1 of appendix A.

3.1.31.2 Design. Design requirements of this specification shall apply except as follows:

(a) The enclosure shall be as specified (see 6.1.1).
(b) Type and design. The motor type shall be squirrel-cage induction of a design as specified in the contract or order (see 6.1.1).
(c) Temperature limits. Motors shall not exceed the class B temperature values specified *in* table I when operating in air or when tested submerged.
(d) Insulation resistance. Insulation resistance of production motors (dry) shall be not less than 2000 megohms when measured in accordance with 40.1.4(c) of appendix A. Insulation resistance of production motors, when subjected to the test of 4.3.4.20, shall be not less than 100 megohms. For suitability test motors, the insulation resistance shall be no less than the values indicated in appendix A.
(e) Insulation. Insulation shall be class B or F. The minimum material requirements of table XIII need not apply to the insulating materials used in motors with sealed insulation system.
(f) Terminal box. Terminal box shall be watertight.

3.1.31.2.1 Random wound motors. Stator winding shall be insulated and varnish treated as follows:

(a) Stator shall be wound in conventional manner.
(b) Slot liners shall be extended at least 1/4 inch from the end of the lamination and shall be folded under the slot stick. The slot stick shall also extend at least 1/4 inch from the end of the laminations.
(c) Coil end turns shall be taped iron to iron and into the slot liner extension with dacron or glass woven tape.

Licensed by Information Handling Services

(d) Lead insulation shall be of the non-wicking type.
(e) Varnish treatment of wound components shall be by vacuum pressure impregnation (VPI) pocess using 100 percent solids epoxy varnish to completely fill winding void spaces and provide adequate surface coverage. If required to provide additional surface coverage over the windings, additional treatments may be applied. As a guide, thixothiopic epoxy varnishes shall be used and the process shall be such that once the wound stator is placed into the treating vessel and vacuum obtained, the varnish shall be introduced into the vessel without breakinq the vacuum.

3. 1.31.2.2 Form wound motors. Stator coils shall be bonded and sealed prior to winding in the stator. Connections after windinq shall be bonded and sealed. As a guide, the following points should be considered for form wound motors:

(a) Coils shall be preformed and preinsulated with a heat sealable *or* vulcanizing flexible plastic or elastomeric material.
(b) Each coil shall be insulated for full voltage to ground and be watertight.
(c) Leads should be of the nonwicking type and shall not be braided. Connections and joints shall be sealed and watertight.

3.1.31.2.3 Repairability. Motors furnished with sealed insulation system shall be designed so that they can be repaired (rewound) using sealed insulating material and processes *or* rewound using conventional rewinding material and methods.

3.1.31.3 Sealed insulation system suitability tests. Prior to delivery of motors with sealed insulation system on contract or order, the manufacturer shall subject a test motor to the suitability tests of appendix A (see 4.6) and pass the required tests. The suitability tests need not be repeated on subsequent contract or order provided no change is made in material or processes. Production motors shall use the same insullating material and process as used in the test motor. Production rotors shall be tested in accordance with 4.3.4.2@.

3.1.31.4 Sealed insulation system review. The review activity for sealed insulation system shall be NAVSEC.

3.1.32 Class H and N insulation suitability tests. Where class H or N in isulation is used, insulation suitability tests in accordance with the procedures detailed in MIL-E-917 shall be conducted and the test results reviewed by NAVSEC.

3.1.33 Inclination (surface ships Motors shall operate within the requirements specified herein while maintaining satisfactory lubrication under the following inclined operation:

(a) Permanently inclined 15 degrees in any position from the normal .
  (1) For horizontal motors, the motor shall be inclined 15 degrees from horizontal *in* positions with front end down, rear end down, base tilted to the right, and base tilted to the left.
  (2) For vertical motors, the motor shall he inclined 15 degrees from the vertical .
(b) Rolling 45 degrees from horizontal or vertical in any position specified in (a) (1) or (2) respectively.

(For submarine applications see 3.5.4.8.)

3.2 Interchangeability. Similar parts, including repair parts supplied for replacement purpose intended to be functionally and physically identical shall be strictly interchangeable without the necessity of further machining, selective assembly or hand fitting.

3.3 Identification plates. Identification plates and information plates where required shall be attached to the part of the machinery or equipment which will not ordinarily be renewed during its normal service life. These plates shall be located where they will be readily visible. Identification plates and information plates shall be made of brass, nickel-copper-alloy, corrosion-resistant steel, or anodized aluminum. Markings shall be either etched, stamped, engraved, metal photographed on anodized aluminum or cast in such a manner as to produce permanent and durable markings to last the anticipated life of the equipment. Etchings, engravings, or stampings shall be not less than 0.003 inch deep. Characters on cast plates shall be raised to at least 0.03 inch. Engraved, stamped or direct etched markings shall be filled with black paint enamel or lacquer. Fasteners used to secure the plates shall not penetrate the frame *or* the end brackets.

Licensed by Information Handling Services

3.3.1 Identification plate markings. The minimum data to be on identification plates for motors shall include the following items:

(a) Manufacture' s name, identification symbols, serial number, manufacturer's drawing number, including revision symbol, and year of manufacture.
(b) Salient design characteristics; hp (or torque rating) , design, voltage, nominal (calculated) full-load current, type of motor, full-load speed, number of phases, frequency, and ambient temperature. This data shall agree with data shown in the classification block of the drawing as required by 3.6.2 (t).
(c) Duty - Where motors rated for intermittent duty, short-time, or varying duty are capable of operating continuously at some decreased rating, that continuous rating shall also be shown on the identification plate. If there is *no* continuous rating, it shall be so stated.
(d) Class of insulation.
(e) National stock number.
(f) Contract or order number.

3.4 Repair parts. Repair parts shall be for immediate use as replacement for originally installed parts in any identical motor design, and the performance of the motor in which such repair parts are installed shall be equal *to* that of the original machine. Design shall be such that no special tools are required for replacement of parts. Special tools are defined as those tools not listed in the National Supply Catalog (copies of this catalog may be consulted in the office of the Defense Contract Administration Service (DCAS)) .

3.4.1 Onboard repair parts.

3.4.2 Quantity. Repair parts, based upon the total number of motors or parts furnished for each ship when specified on a contract or order (see 6.1.1) shall be supplied as specified in table XI.

3.4.3 Stock repair parts. Quantities of stock repair parts (that is parts required to replace onboard repair parts *or* those required for repair of a motor but not specified as onboard) and their stock numbers shall be determined in accordance with MIL-P-15137.

3.5 Requirements applicable to individual service

3.5.1 Service A motor requirements.

3.5.1.1 General. Service A motors shall conform to MIL-E-917, and shall be a H.I. shockproof motor meeting the requirements specified in 3.1 to 3.5.1.17 herein, as applicable.

3.5.1.2 Reliability. Except for brushes and bearings, the motor shall be designed for a minimum of 40,000 hours of operation without corrective maintenance. Insulation system in accordance with MIL-E-917 will be considered as meeting this requirement. Brushes shall provide a minimum of 8,000 hours of operation. Bearings shall provide a minimum B-10 life of 10,000 hours as calculated in accordance with FF-B-171.

3.5.1.3 Materials.

3. 5.1.3.1 Material restrictions. Minimum requirements for materials to be used shall be as specified in table XIII except that nonmagnetic materials for nonmagnetic motors conforming to 3.5.2 for items listed in table XIII will be permitted.

Licensed by Information Handling Services

TABLE XIII. Minimum materials requirements for service A motors.

Item	Limitations	Material	Specification or remarks
Motors	All sizes	Silicone	Materials containing silicone shall not be used except in brushless motors.
Ball bearings	All sizes	----------	General application FF-B-171 Noise quiet application MIL-B-17931.
Ball bearings caps	All sizes	Steel[1/] Malleable iron Nodular graphitic iron Aluminum	---------- Grade I, QQ-I-666 MIL-I-24137 Commercial treated for corrosion resistance
Brushes	All sizes		MIL-B-3743
End shields	All sizes	Steel[1/] Malleable iron Nodular graphitic iron	---------- Grade I, QQ-I-666 MIL-I-24137
Eyebolts, lifting	Where used	Steel	MIL-S-1222, grade 5, galvanized in accordance with ASTM A153
Fans - external and internal	All sizes ---------- ----------	Steel[1/] Aluminum Malleable iron Nodular graphitic iron	---------- QQ-A-601 Grade I, QQ-I-666 MIL-I-24137
Fans - external	External fan for totally enclosed fan cooled motors	Plastic, molded, thermosetting	MIL-M-14
Flanges - armature, rotor	Where used	Steel[1/] Nodular graphitic iron	---------- MIL-I-24137
Frames	All sizes ---------- ----------	Steel[1/] Malleable iron Nodular graphitic iron	---------- Grade I, QQ-I-666 MIL-I-24137
Grease cups and pipes Grease	All sizes Bearings total temperature of 149°C and below	Steel[1/] Petroleum	Treated for corrosion MIL-G-24508
Hand-hole or access covers	All sizes ----------	Transparent plastic	MIL-E-917
Insulation - ground and phase, lead and connection, collector ring, spacers and separators, washers, bushings, tubes, wedges and lead clamp.	Class B, F, H or N	All types and classes	MIL-E-917

See footnote at end of table.

Licensed by Information Handling Services

TABLE XIII. Minimum material requirements for service A motors. - Continued

Item	Limitations	Material	Specification or remarks
Lead wire	Class B, F, H or N	All types and classes	MIL-E-917, except silicone rubber of MIL-W-16878, type FF of MIL-W-16878/8 may be substituted for type FFW of MIL-W-16878/9 with prior acceptance by NAVSEC.
Oil, lubricating	Maximum oil sump temperature 82°C.		MIL-L-17331 Navy symbol 2190TEP
Oil discs	All sizes	Steel[1/]	----------
Part covers for totally enclosed type machines where the cover acts as a shield only, and not as a support for another part such as an auxiliary or brake.	All sizes	Steel[1/]	----------
	----------	Malleable iron	Grade I, QQ-I-666
	----------	Nodular graphitic iron	MIL-I-24137
Quills and spiders	Where used	Steel[1/]	----------
Scraper	All sizes	Brass	Commercial
Shafts	Close-coupled pumps	----------	Corrosion-resistant material
	All other motors	Steel	Tensile strength not less than 75,000 lb/in^2 and elongation not less than 20 percent in 2 inches.
Sleeve bearings	All sizes	Bronze	QQ-C-390, alloy 910
		Babbit anti-friction metal	QQ-T-390, grade 2
Terminal boxes and terminal box covers	All sizes	Steel[1/]	----------
		Malleable iron	Grade I, QQ-I-666
		Nodular graphitic iron	MIL-I-24137
Wire electric	All types	Copper	MIL-E-917
Varnish, insulating	All classes		MIL-I-24092
Wire, end turn banding	All sizes	Steel and nonmagnetic alloy	MIL-W-30508
Wedges	All sizes	Steel	Commercial
		Brass	Commercial

[1/] Unless otherwise indicated in table XI steel parts may be fabricated, from cast or wrought material. Cast steel shall be in accordance with grade B of MIL-S-15083, or required.

Note: Alternate wire sizes - Sizes other than those in MIL-E-917 may be used provided the design is such as to permit rewinding with a size and shape listed in MIL-E-917 and having an equivalent or higher temperature rating.

3.5.1. 3.1.1 Use of asbestos. Materials containing asbestos shall not be used unless satisfactory substitute materials are not available.

Licensed by Information Handling Services

3.5.1.3.1.2 Brazing alloys for squirrel-cage windings. Where required, silver brazing alloys or copper base brazing alloys for eletrical connections shall conform to QQ-D-654, or QQ-B-650 respectively.

3.5.1.4 Temperature limits. Motors shall be so designed as not to exceed the values of maximum permissible temperature rises specified in 3.1.30 and table I when tested as specified in 4.3.4.14. Methods of temperature measurements specified in table I shall apply.

3.5.1.5 Windings.

3. 5.1.5.1 Slot fill factor. Motors shall be provided with a slot fill factor not to exceed 63 percent fill factor is defined as the cross sectional area of insulated copper wire in the slot to the available slot area minus the cross sectional area occupied by insulation.

3.5.1.5.2 Coilhead dimension and forming. Forming fixtures shall not be used for the winding or rewinding of wound components to meet the winding end turn envelope dimensions. The *end* turn outside diameter and length dimensions for the connection end shall be shown on the motor drawing.

3.5.1.5.3 Varnish treatment. Insulated electrical windings shall receive at least one of the required impregnations before assembly on machine parts except that impregnation before assembly on machine parts will not be required for windings which are to be inserted in semienclosed slots or other windings where the method of installation is such as to make this preliminary impregnation impractical. In such cases required impreqnations shall be made after the windings are installed on the machine parts.

3.5.1.5.4 Coilhead. Coils shall be securely retained in the slot by wedges. Banding shall be by glass insulated tape (see 3.1.15.1) or by steel bandinq wire. Where steel banding wire is used to band end turn windings, the wire shall be in accordance with MIL-W-30508. Insulation used under the wire shall be in accordance with MIL-E-917.

3.5. 1.5.5 Core material. Core material shall be provided with interlaminar insulation and shall be capable of withstanding burn out temperatures of 315.6°C for 16 hours during stripping of windings in preparation for rewinding. Inorganic type interlaminar insulation is preferred. Where other than inorganic insulation is used, the suitability of the material or processes shall be demonstrated by suitability test of 4.6. When tested in accordance with 4.6 the difference between hottest spot temperature and coolest spot temperature or the stator laminations shall not exceed 15°C.

3.5.1.6 Ball bearings. Ball bearings, their dimensions, mounting ant? application shall be in accordance with table XIV and FF-B-171 as follows:

(a) Type 111, classes 1, 2 and 7.
(b) Type 120.
(c) For bearings for submarine and noise (quiet applications see 3.5.4.5.
(d) For surface ship noise quiet applications see 3.5.5.1.
(e) Other types proposed for special application requirements shall be reviewed by the command or agency concerned,

3.5.1. 6.1 A plate bearing the warning “Do Not Lubricate)’ shall appear on the motor frame where type 120 bearings are used.

3.5.1.6.2 Size and series. Unless otherwise specified in the contract or order, the bearings shall be the size and series as shown in table B of figures 1 through 4 and the applicable table for a.c. motors of MIL-P-17840 and in MIL-F-18953. Grease lubricated ball bearings shall be selected so as to not exceed the nd_m value of 350, 000. (Where n is rotatinq speed in r/rein and d_m is bearing mean diameter. Where this nd_m value will be exceeded , oil lubrication shall be required.)

Licensed by Information Handling Services

TABLE XIV. Bearing shaft, shaft shoulder, hosing and housing shoulder diameter

Bearing size	Shaft diameter		Shaft shoulder diameter	Housing diameter		Housing shoulder diameter
	Minimum	Maximum	Minimum	Minimum	Maximum	Maximum
203	0.6692	0.6695	0.770	1.5748	1.5754	1.339
204	.7875	.7878	.940	1.8504	1.8510	1.614
205	.9844	.9847	1.140	2.0472	2.0479	1.811
206	1.1812	1.1815	1.340	2.4409	2.4416	2.205
207	1.3781	1.3785	1.530	2.8346	2.8353	2.598
208	1.5749	1.5753	1.730	3.1496	3.1503	2.913
209	1.7718	1.7722	1.930	3.3465	3.3474	3.110
210	1.9686	1.9690	2.130	3.5433	3.5442	3.276
211	2.1655	2.1660	2.410	3.9370	3.9379	3.680
303	0.6692	.6695	0.906	1.8504	1.8510	1.6140
304	.7875	.7878	1.024	2.0472	2.0479	1.8110
305	.9844	0.9847	1.140	2.4409	2.4416	2.280
306	1.1812	1.1815	1.340	2.8346	2.8353	2.620
307	1.3781	1.3785	1.590	3.1496	3.1503	2.940
308	1.5749	1.5753	1.813	3.5433	3.5442	3.310
309	1.7718	1.7722	2.000	3.9370	3.9379	3.660
310	1.9686	1.9690	2.270	4.3307	4.3316	4.000
311	2.1655	2.1660	2.468	4.7244	4.7253	4.380
312	2.3623	2.3628	2.688	5.1181	5.1191	4.750
313	2.5592	2.5597	2.968	5.5118	5.5131	5.190
314	2.7560	2.7565	3.156	5.9055	5.9068	5.560
315	2.9529	2.9534	3.380	6.2992	6.3005	5.940
316	3.1497	3.1502	3.550	6.6929	6.6942	6.250
317	3.3466	3.3472	3.840	7.0866	7.0879	6.620
318	3.5434	3.5440	4.060	7.4803	7.4817	7.000
319	3.7403	3.7409	4.290	7.8740	7.8754	7.380
320	3.9371	3.9377	4.488	8.4646	8.4660	7.940

3 .5.1.6.3 Bearing mounting Bearings shall not be mounted in a cartridge but shall be fully mounted in the end shields. Mounting of bearings shall be as follows:

(a) opposed shoulder method. Where this method is employed, the end play of the shaft shall be set to compensate for any relative movement that may occur between the shaft and the housing due to temperature differential between these parts. In no case shall this end play be less than 0.015 inches for frames 182 through 326 and 0.020 inches for frames 364 through 445, or greater than 0.045 inches for any frame size.

(b) Fixed-free method. Where this method is employed, the fixed bearing shall he secured on the shaft and shall be constrained axially in the housing by suitable housing and end cap shoulders. The fixed end bearing shall be secured on the shaft by a locknut and a lockwasher or by a locknut utilizing a nylon lock. For frames 215 and smaller, a beveled snap ring, type III, class 2 of MIL-R-21248, may be used. The free end bearing housing shall provide a minimum clearance of 0.015 inches for frames 182 through 326 and 0.030 inches for frames 364 through 445 for axial shaft expansion. End caps shall be secured by screws and bolts in such a manner that the screws and bolts shall be capable of being removed without dismantling the motor. For gear motors, the fixed bearing shall be on the gear end.

3.5.1.6.4 Bearing preload washer or springs. The use of bearing preload washers or springs or both shall be permitted provided the washer or springs or both are secured in the housing. The spring or washer shall be applied in such a manner as to provide for the temperature differential specified in 3.5.1.6.3.

3.5.1.7 Sleeve bearings. The lubricating disc shall clear all obstructions. Oil shall be removed from the-disc by means of a brass scraper. The disc shall be attached to and rotate with the shaft, and shall deliver oil from the sump to the upper portion of the bearing for lubrication.

Licensed by Information Handling Services

3. 5.1.7.1 Oil disc. The disc shall be of uniform cross-section with a channel on the inside diameter to contain the oil while rotating. A brass scraper shall be mounted that will remove oil from the channel of the disc for bearing lubrication.

3. 5.1.7.2 Clearances. Oil clearances shall be as specified in table XV.

TABLE XV. Oil clearances.

Basic diameter of journal	Maximum design diametrical oil clearance including shaft and bearing tolerances
Inches	Inch
1.000	0.004
2.000	.005
3.000	.007
4.000	.009
5.000	.010
6.000	.012
7.000	.014
8.000	.016
9.000	.018
10.000	.020

3.5.1.8 Seals. Except where double sealed ball bearings are used, the housing shall provide for a close-clearance metallic (nonrubbing) seal on both sides of the bearings to prevent the leakage of oil or grease along the shaft. This is in addition to bearinq shields or slingers if required on the shaft. Friction type seals may be used to supplement the close-clearance metallic seal on motors for certain applications; for example, watertight and submersible motors. Such sealing arrangements shall however, be satisfactory to the command or agency concerned (see 3.1.22.2.2) . Friction type seals shall be secured in their housing and on the shaft to prevent rotational or axial movement in the housing or on the shaft.

3.5.1.9 Mechanical balance. When tested as specified in 4.3.4.7.1 and 4.3.4.7.2, the maximun allowable amplitude in inches shall be as specified in table XVI. Unless otherwise specified (see 6.1.1) the degree of balance shall be "Standard balance" in accordance with table XVI. For submarine applications (see 3.5.4.7) . For surface ship noise quiet application (see 3.5.5.2).

TABLE XVI. Mechanical balance.

Motor speed r/min	Maximum allowable total amplitude		
	Standard balance	Precision balance	Super-precision balance
	Inch	Inch	Inch
3000-4000	0.001	0.0005	0.0002
1500-2999	.0015	.00075	.0003
1000-1499	.002	.001	.0004
999 and below	.003	.0015	-------

3. 5.1.9.1 When metal strips or wedges are used in the rotor slots for final balancing they shall be well insulated from the rotor core.

3.5.1.10 Airborne noise. Unless otherwise specified (see 6.1.1), airborne noise of motors when tested as specified in 4. 3.4.5.2 and MIL-STD-740 shall not exceed the limits specified in table XVII.

Licensed by Information Handling Services

TABLE XVII. Airborne noise limits (sound pressure levels in dB RE 20 μPa.

Hp	Enclosure type	Synchronous speed r/min	Octave band center frequency in Hz								
			31.5	63	125	250	500	1K	2K	4K	8K
1 through 60	DPP	3600	95	90	85	82	79	76	75	75	75
75 through 250			95	90	89	89	93	85	87	81	81
1 through 250	DPP	1800	95	90	85	82	79	76	75	75	75
1 through 10	TFFC	3600	95	90	85	82	79	76	75	75	75
15 through 75			95	90	85	89	90	85	85	85	84
100 through 150			95	90	85	89	92	91	89	85	84
1 through 30	TFFC	1800	95	90	85	82	79	76	75	75	75
40 through 150			95	90	85	89	91	90	87	80	75

3.5.1.11 Shock resistance. Motors shall be capable of withstanding the high-impact shock test specified in MIL-S-901 and 4.3.4.19.

3.5.1.12 Brush holder support The brush holder support shall be secured to prevent loosening of the support under shock or vibration (see 3.1.18.1 through 3.1.18.4').

3.5.1.13 Method of attaching fans to shaft. Where fans are not an integral part of the shaft, *one* of the following methods—s=l~be used in attaching fans to the shaft:

(a) A key, shaft shoulder and a nut with keyed lock washer.
(b) A key, shaft shoulders and rings or tubing.
(c) A long key secured in a closed-end key seat with locked set screw secured on the key.
(d) A Woodruff key with a locked set screw secured on the key. Design shall be such that the set screw will not produce unbalance.
(e) A split fan with clamping bolts and key.

3.5.1.14 Thread cutting screws. Thread cutting screws (self-tapping screw) shall not be used to secure any part of the motor.

3.5.1.15 Securing terminal leads. Terminal wire lead clamps shall be provided. Clamps shall assure that external strain= not transmit stress to wire and connections within the motor frame. Friction rubber bushings, unclamped, shall not be used. Sealing compounds for anchoring leads shall not be used (see 3.1.25.3).

3.5.1.16 Cable connectors. Connectors shall be of the solderless type conforming to MIL-E-16366 (see 3.1.25.4).

3.5.1.17 Temporary air filters. When specified (see 6.1.1), motors shall be designed to operate satisfactorily~en air intakes are covered by a filtering media (see 6.1.1) temporarily attached to the motor housing. When tested as specified in 4.3. 4.14.1.1.3 motors with temporary filters shall not exceed temperature *rise* specified in table I by more than 10"C.

3.5.2 Nonmagnetic motors. Nonmagnetic motors, when specified (see 6.1.1) shall meet the additional requiments specified in 3.5.2.1 and 3.5.2.2.

3.5.2.1 Design. Design of the motors shall be as follows:

(a) Motors shall have not less than four poles.
(b) Protuberances of magnetic material, such as feet or supports shall not be used.

Licensed by Information Handling Services

3. 5.2.2 Materials. Materials shall be as follows:

(a) Parts shall be of nonmagnetic material. Nonmagnetic material is defined as material which has a maximum permeability of less than 2 after fabrication.
(b) The use of ferromagnetic material shall be considered for the following parts only:
(1) parts in the electrical magnetic circuits.
(2) Parts for which substitution of nonmagnetic materials could not be provided without impairing either the strenqth or satisfactory operation of the motor.

3.5.3 Pump motors. The following additional requirements shall apply to pump motors as applicable:

(a) For dripproof protected pump motors, when an air intake at the pump end of the motor is provided, the air flow direction shall be at right angles to the shaft.
(b) Except motors supplied with friction type seals as used in submersible and watertight motor enclosures, a slinger with guard shall be provided on the motor shaft immediately outside the end shield to prevent entrance of water into the bearing housing. The slinger shall have an external diameter of not less than 1.5 times the shaft diameter and an axial clearance between the end shield and slinger not greater than 30 roils. Where the slinger end shield or the pump design or both will insure that no injury to personnel shall result and no entrance of water into the bearing housing shall take place without the guard, the guard need not be furnished. Balancing rings may also serve the function of a slinger if so designed.
(c) In addition to the requirements of 3.5.1.6, ball bearings shall be grease lubricated and have the facility to be relubricated. Bearings shall be loose (c3) internal fit design. Bearings shall be used for 3600 r/rein motors, except when otherwise specified (see 6.1.1) .
(d) The maximum value of full-load slip for 2 poles, totally enclosed, fan cooled centrifugal pump motors, 100 hp and above, shall not exceed 1.25 percent at the conclusion of continuous full-load heat run.

3.5.4 Motors for submarine service. In addition to the requirements of 3.1 through 3.5.1.17 (see 6.1.1) the requirments specified in 3.5.4.1 through 3.5.4.14 shall apply to motors for submarine service.

3.5.4.1 Enclosure. The enclosure shall be one of those listed under 3.1.8 or shall be special as specified (see 6.1.1) except that dripproof protected motor shall meet the requirements of MIL-STD-108 at 45 degrees from the vertical in lieu of 15 deqrees.

3.5.4.2 Mounting. Horizontal motors shall be suitable for either deck mounting or over-head suspension. Dual ended ventilated fair inlets in both end shields and air outlets in frame) dripproof protected horizontal motors shall be considered suitable provided a shield is designed to meet the necessary dripproofness requirements when the motor is suspended from an overhead structure. This shield shall be provided when required by the contract or order; however, it shall be shown on the motor drawing, whether the shield is or is not furnished, in sufficient detail to permit fabrication by a Government activity. Tests on dual ended dripproof protected horizontal motors shall be conducted with the shield installed on the motor.

3.5.4.3 Feet. Unless otherwise specified in the contract or order, the feet shall be detachable and secured by means of bolts if by this arrangement the motor can be passed through a specified diameter round hatch. The bottom of the feet shall be machined to a finish of 100 to 125 microinches root mean square (rms). The bottom of the feet shall be blued in lieu of painting. Deviation from coplanarity of the feet shall not exceed the following:

Frame	By feeler gage (Inch)
182 - 326	0.002
364 - 445	.003
Above 445	.004

Licensed by Information Handling Services

3.5.4.4 Terminal boxes. Except for symmetrical motors means Shall be provided for mounting the, terminal box on either side of the frame. Internal leads shall be of sufficient. length to allow connections to the terminal box on either side of the frame. For horizontal motors , the end shields shall be interchangeable the frame shall be capable of being turned end for end, and the rotor shall be reversible in the assembly. On vertical motors, mounting holes shall be symmetrical so that stator can be rotated 180 deqrees on the mounting foundation. With symmetrical motors, a note shall be added to the motor drawing indicating that the motor is symmetrical and the procedure for interchanging the end shields reversing the rotor assembly and rotating the frame shall be given.

3.5.4.5 Ball bearings In addition to the requirements of 3.5.1.6, quiet operation bearinqs and fit ups shall he in accordance with MIL-B-17931.

3.5.4.6 Center of gravity.and radii of gyration. The center of gravity of the motor and the radii of gyration of the motor about its three principal axes shall he indicated or. the drawinq.

3.5.4.7 Dynamic balance The degree of balance shall be "Super-precision" in accordance with table XVI unless, otherwise specified in the contract or order.

3.5.4.8 Inclination. Motors shall operate within the requirements specified herein while maintaing satisfactory lubrication under the following inclined operation:

(a) Permanently inclinded 45 degrees in any position from the normal .
  (1) For horizontal motors, the motor shall be inclined 45 degrees from hori zontal in positons with front end down , near end down, rear end down, base tilted to the right, and base tilted to the left.
  (2) For vertical motors, the motor shall be inclined 45 deqrees from the vertical.
(b) Rolling 60 deqrees from horizontal or vertical in any position specified in in (a) (1) or (2) , respectively.

3.5.4.9 Structureborne noise. Structureborne noise of motors, when tested as specified in 4. 3.46.1 and 4.3.4.6.2, shall not exceed the limits specified in MIL-STD-740 for type ? equipment.

3.5.4.10 No-load electrical balance. The maximum deviation of any phase current from the average of all phases shall not exceed 3 percent of the average no-load current when tested in accordance with 4.3.4.9.

3.5.4.11 Shafts. Keyways which extend up to the bearing scat. shall be end milled. keyways shall not extend under the bearing more than absolutely necessary and under no circumstances under the ball track.

3.5.4.12 Frames and end shields. The diameter bolt circle for the clearance holes of the end bracket shall nave a tolerance not exceeding 25 percent of the tolerance of the clearance holes. Angular positioning of the clearance holes for these bolts shall have the same tolerance as the tapped holes in the frame.

3.5.4.13 Coveys, plates and hoods. The use of flat covers, plates and hoods should be avoided. Enclosures shall be stiffened by the use of ribs, formed shaping, and similar measures. Natural frequencies of all major parts Shall be greater than 1.4 times the maximum frequency of exciting forces most likely to force them into vibration such as mechanical unbalance, magnetic effects, and fall blade effects.

3.5.4.14 Warning plate. A plate bearing the warning "SPECIAL QIIET DESIGN MOTOR MIL–STD-740 - HANDLE WITH CARE" shall be attached to motor frame.

3.5.5 Motor for low noise applications (surface ships only). In addition to the requirements of 3.1 through 3.5.1.17 the requirements specified in 3.5.5.1 through 3.5.5.4 shall apply to motors for low noise applications for surface ships when specified (see 6.1.1) .

3.5.5.1 Ball bearigs. In addition to the requirements of 3.5.1.6, ball bearings shall be in accordance with MIL-B-17931. Standard bearings in accordance with FF-B-171 may he used provided they are not preselected on the basis of special low noise requirements of fits and tolerances.

3.5.5.2 Dynamic balance. The degree of balance shall be "Super-precision" in accordance with table XVI unless otherwise specified in the contract or order.

Licensed by Information Handling Services

3.5.5.3 Structure noise. Structureborne noise of motors, when tested in accordance with 4. 3.4.6.1 and 4. 3.4.6.2 shall not exceed the limits specified in 6.1.1.

3.5.5.4 Shafts. Keyways which extend up to the bearing seat shall be end milled. Keyways shall not extend under the bearing more than absolutely necessary and under no circumstances under the ball track.

3.5.6 Service C motor requirernents. When service C motors are specified (see 6.1.1), the, shall be marine type commercial motors meeting the requirenents specified in 3.1 to 3.4.2 and 3.5.6.1 through 3.5.6.3.

3.5.6.1 General. Protection against corrosion shall conform to MIL-E-917. Temperature limits shall conform to table I.

3.5.6.2 Magnet wire. The magnet wire shall be of such size as to permit rewinding with one of the types specified in MIL-E-917.

1.5.6.3 Ball bearigs. Ball bearings shall be of such type as to permit replacement with any of the type specified in 3.5.1.6. Facility for lubrication shall be furnished as required (see 3.1.22,2.1) . The axial movement of the shaft shall be not more than 0.045 inch, including bearing end play, when the application does not require the end play to he minimized.

3.6 Technical data. The contractor shall prepare technical data in accordance with the data ordering document included in the contract or order (see 6.1.2) and as specified in 3.6.2 through 3.6.4.

3.6.1 Drawing review. The review activity shall be NAVSEA or the NAVSEA field representative delegated such review authority.

3.6.2 Drawing for service A motors. Drawings for service A motors shall be multi-detailed wherever possible and figure 5 may be used as a guide for format and arrangement. In addition, drawings shall contain the following information:

(a) An assembly end and side view showing all parts of the motor identified with piece number in the list of materials and direction of mounting. The assembly side view shall show a longitudinal section of the motor above the centerline. The assembly end view shall show a transverse quarter section above the centerline. These assembly views shall clearly show the following information:
  (1) bearing housing construction, bearing fits and tolerances, and provision for shaft expansion. Bearing fits and tolerances may be shown as a note on the drawing or on other assembly views.
  (2) Sectional view of collector rings (where used) , brush rigging and brushes, design and materials of all brush rigging and brush holder stud installation, and methods of supporting brush rigging, brush holder studs and brushes against excessive deflection due to high impact shock. If necessary for clarity, a separate detail shall be included on the drawing. Brush information shall include manufacturer's qrade, Government grade and Government form number.
  (3) Method of retaining collector rings and insulation, sleeves. rings, and rotor core to shaft. Where a press fit is used to secure the rings or cores to shaft the interference fit and minimum pressure to force the cores or rings on the shaft shall be shown. Where a shrink fit is used to secure the ring or cores to the shaft, the interference fit and minimum pressure to remove the rings *or* cores from the shaft shall be shown.
  (4) Baffles and *screen* guards and the method used to attach them to the end shields or frames.
  (5) Method of attaching terminal box to frame.
  (6) Method of bringing cables out of frame into terminal box and the method of protecting these cables against chafing at sharp metallic corners.
  (7) Method of clamping motor leads in the terminal box to prevent strain on internal connections and method of protecting lead insulation against abrasion by the clamp.
  (8) Method of attaching fan to shaft and detail of fan showing constructions and number of blades.
  (9) Overall dimensions including mounting, shaft extensions and key.

Licensed by Information Handling Services

(10) Method of securing stator core to frame to prevent axial and rotational movement and the minimum pressure to force the core in the frame shall be shown if a press fit is used in conjunction with other means. Where a shrink fit is used, the pressure required to force the stator core out of the frame shall be shown.
(11) Lifting means where required (see 3.1.29).
(12) Direction of air flow.
(13) Total axial movement of the shaft to include bearing end play.
(14) Details required by this specification and not covered in the foregoing enumeration.

(b) A detail working drawing of the shaft including bearing mounting dimensions,
(c) A schematic wiring diagram of the motor windings.
(d) Drawing of wiring arrangement and stator connection diagram. A connection table of motor leads for two or more speed or dual voltage motors.
(e) Guaranteed performance Including locked-rotor current, torque and power factor; pull-up torque, breakdown torque, and efficiency and power factor at 2/4, 3/4 and 4/4 load.
(f) Stator inside diameter, and core length.
(g) Rotor outside diameter, number of bars, and bar material. Indicate reference line and dimension for locating rotor axially on shaft in connection with replacement of shaft or rotor.
(h) Size of end ring and end ring material.
(i) Winding data of stator, including:
(1) Number of poles.
(2) Type of connection.
(3) Number of slots.
(4) Number of coils.
(5) winding pitch in slots.
(6) Turns in series per coil.
(7) Conductor circular roils or size and form (round or rectangular).
(8) Conductor insulation and Government specification.
(9) Resistance between terminals in ohms.
(10) Weight of copper in pounds.

(j) Insulation materials and their dimensions and applicable specification of the following:
(1) Slot cell.
(2) Spacer.
(3) Top wedge.
(4) "u" wedge (where used) .
(5) Insulation between phases.
(6) Insulation on coil extension.
(7) Insulation on coil leads and connections.
(8) Complete stator. Government specification and grade of varnish.
(9) Lead wire size and current carrying capacity, and lead wire markers.
(lo) For wound rotor motors, data as specified in (s) (2) shall be shown.

(k) Slot sections showing dimensions of sections and details of slot wedges, slot armor, coil spacers, and slot tubes.
(1) Sketches showing in detail how field coils, where used, are assembled, insulated and supported on the pole pieces, and method of preventing excessive relative motion between the various conductors and windings when subjected to high-impact shock.
(m) Where rubbing seals are used, a sketch showing construction of seal and method used to secure seal in its housing and shaft to prevent axial or rotational movement.
(n) Sketches for each type of winding, other than that required by item (l), showing a cross-section of the winding with relative location and identification of insulating materials shown.
(0) Test data. In the case of multispeed motors, the specified data shall be included for each definite speed:
(1) Table of temperature conditions containing the following:
a. Time and hp load and amperes.
b. Thermocouple readings of items listed in table I and ambient temperature at shutdown with readings at one hour before shutdown (in case of short-time duty motors this column need not be completed) , final while running (prior to shutdown) and after shutdown.
(2) The resistance in ohms and rise by resistance in degree centigrade including the following:
a. Cold temperature in degrees centigrade.
b. Hot temperature at end of full-load heat run.

Licensed by Information Handling Services

c. Rise calculated by resistance.

(3) Performance at rated voltage and frequency including the following at 4/4, 3/4, 2/4 and 0 load.

a. Actual load , amperes, *watts,* r/min, efficiency, power factor and torque.

(4) Torque data for locked rotor, pull-up and breakdown listing volts, amperes, r/min and foot-pounds as applicable.

(5) Air-qap in inches for sleeve heqaring motors only.

(6) Weight of the complete motor and weight and WR^2 of the rotor.

(p) Detail of the identification plate and identification plate data (aria other information plate detail and data where required) . Where an identification plate drawing has been submitted to NAVSEC, it will not be necessary to show a detail of the identification plate on the motor drawing. However, it show be necessary to identify the plate in the list of material and show the manufarturer's drawinq number of the identification plate drawing.

(q) A note identifying bearings by Goverment type or class or both, size and series.

(r) A note identifying the type and class of the applicable Government standard bearing puller (see GGG-P-781) .

(s) Additional insulation data:

(1) The following additional insulation data shall be included on each command drawing or on a separate insulation drawing. If the data are shown on a separate insulation drawing covering insulation practice for a number of motors, the insulation drawinq can be referred to on each applicable motor drawing subject to the following:

a. A manual is being supplied for the driven equipment. and a copy of both the motor and insulation drawings are included in the manual.

b. When a manual is not being supplied for the driven equipment, reference to the insulation drawing on the motor drawing will be permitted provided the insulation drawing is furnished with the motor drawing.

(2) These additional data, toqether with the information required by (j) , (k), (1) and (n), inclusive, shall completely describe all insulation used , indicatinq the materials, dimensions, forms , sequence of winding and insulation operations, numbers of layers and amount of overlapping of tape applications, treatment schedules prebake period and temperature, number of dips and class of varnish used. varnish manufacturer's identification number or symbol, temperature and duration of baking temperatures, vacuum and pressure employed during impreagnation, (where used) as applicable for each type of wound assembly (main field COils, stator coils, and wound rotor assembly) including:

a. Conductor strand and turn insulation.

b. Coil insulation includinq slot and end turn insulation of each armature coil, ground insulation, coil turn separators, coil end turn handing insulation, and support pads between coils and armature, rotor or pole piece supports.

c. Other sketches and data as necessary to provide instructions in the method of manufacture (insulation and forming of each wi~dling These sketches shall show such details as dimensions, the direction and overlap of the various tape windings on strands. conductors, turns and coils, the distance that coil slot insulation and slot wedge extend beyond the iron, and the original and final shape of the wound conductors and coils, including flare. A sketch shall be shown indicating the location of pins or the form for winding mush or random wound coils.

d. Each sketch shall be identified as to the design of motor and the type of winding.

(t) Classification block directly shove title block including manufacturer's type and class, frame size, duty, enclosure', speed class, synchronous and full-load r/rein, hp, volts, Hz, phases, type of rotor, design. class of insulation, type of mounting, service classification ambient temperature, and nominal (calculated) full-load amperes with the following notation. In addition, the following identification shall be placed below classification block:

(1) For submarine motors - "SPFCIAL QUIET MOTOR DESIGN. MIL-STD-740".

(2) For nonmagnetic motor - "NONMAGNETIC (NM)".

Licensed by Information Handling Services

(Note: This calclated value of full-load amperes can be used as a basis for selecting the distribution system components and overload heaters or relays. When the test data required by 4.3.4.14 becomes available the calculated full-load current shall be compared with the actual full-load. If the calculated current differs from the actual full-1oad current by more than 10 percent for motors of 10 hp or less, by more than 7-1/2 percent for motors of 15 through 75 hp, and by no more than 5 percent for motors over 75 hp, the drawings shall be corrected to show a reconciled value for calculated full-load amperes.)

(u) Government specification, size, and quantity applicable to motor terminal lugs.

(v) Phantom view of grease cups flagged and listed by size in the parts list. with the following comment in the remarks column: "Repair part only".

(w) (In drawings covering equipment shock-test, which have been found satisfactory, there shall be indicated the following:

(1) The file number and date of the shock-test report and the file number and date of the command or agency concerned letter of review.

(x) Airborne noise and structureborne noise test data.

(y) on class H or N insulated motors, the file number and date of the command. or aqency concerned letter accepting the insulation suitability test.

(z) In the parts list, identify onboard repair parts by an asterisk and add the following note under the parts list: "Piece numbers identified by an asterisk are normally supplied as onboard repair parts. For onboard repair parts actually furnished refer to the contract or order" .

(aa) On nonmagnetic motors, the unit weight of all items constructed from magnetic materials.

(bb) On motors with sealed insulation system, the file number and date of the suitability test report.

(cc) In the specifications and exceptions block, include the number of the specification, the revision and effective date, the amendment and effective date, as applicable, and additional data pertaining to special requirements of the procurement specifications.

NOTE: Figure 5 is indicative of the general arrangement and information desired by the command or agency concerned for a service A motor drawing for a two-speed integeral hp, a.c. motor. The command or agency concerned recognizes that the information required on other designs of motors; such as single speed, will not be the same as shown hereon. In such cases lt will be permissible to add or subtract the necessary column, and information so as to fit the particular motor.

3.6.2.1 Test resalts. Results of the first periodic tests, verified and attested by the manufacturer's quality control representative shall be included on and made a part of the finished drawings of service A motors.

3.6.3 Service A motor design manual system. Where practical, a motor design manual system may be used in lieu of the drawings specified in 3.6.2. This system shall consist of a motor design manual and an application drawing.

3.6.3.1 Motor design manual. The design manual, where furnished, shall be on standard 8-1/2 by 11 inch sheets bound in a hard cover. The design manual shall cover only standard general purpose motors as specified on fiqures 1 through 4, and close-coupled pump motor standards of MIL-P-17840. The design manual shall contain general construction details (drawings, tables, and so forth) required by 3.6.2 and the following (see 3.6.3.2) :

(a) Each design, construction , or treatment method shall be detailed separately and shall be identified by a suitable number of lettering system.

(b) Limits on combinations of designs used shall be stated.

3.6.3.2 Application drawing. This drawing shall be used only in conjunction with a design manual. The drawing shall conform to figure 6 in form and qeneral arrangement and shall contain the following minimum data:

(a) Data as required by 3.6.2 (a) (1) second sentence only, (2) last sentence only, (9), (11), (12) and (13); 3.6.2 (c) through (k), (n), (0), (q) through (bb).

(b) The remaining data of 3.6.2 shall be covered by reference to the design manual.

(c) The drawing shall be identified as an application drawing and shall reference the design manual for specific motor construction details.

3.6.3.3 Application drawing review. The *review* activity shall be NAVSEA or the NAVSEA field representative delegated such review authority.

3.6.3.4 Design manual review. Design manuals shall be submitted to NAVSEC for review.

Licensed by Information Handling Services

3.6.4 Drawing for service C motors. Drawings for service c′ motors shall be multi-detailed wherever possible and shall conform to figure 7 in form and arrangement.

(a) An outline drawing giving all dimensions, clearance holes, tapped holes, holes for mounting and position of mounting.
(b) Stator data including inside diameter, core length and winding data, Winding data to include:
  (1) Number of poles.
  (2) Type of connection.
  (3) Number of slots.
  (4) Number of coils.
  (5) Winding pitch in slots.
  (6) Turns in series per coil.
  (7) Conductor diameter.
  (8) Conductor insulation and Government specification.
  (9) Resistance between terminals in ohms.
  (10) Weight of copper in pounds.
(c) Treatment of wound stator. Number of dips and bakes including baking temperatures and period of baking.
(d) Rotor data including o.d. number of bars, bar material, size of end ring, and material of end ring.
(e) Insulation materials and applicable specification for the following:
  (1) Slot cell.
  (2) Spacer .
  (3) Top wedge.
  (4) "u" wedge (where used) .
  (5) Insulation between phases.
  (6) Insulation on coil extension.
  (7) Insulation on coil leads and connections.
  (8) Insulation on completed windings.
  (9) Lead wire.
(f) Detail of slot section, showing details of slot wedges, slot armor, coil spacers and slot tubes.
(g) A detailed working drawing of the shaft.
(h) Schematic wiring diagram of motor windings and stator connection diagram.
(i) Weight of complete motor in pounds.
(j) Guaranteed performance including locked-rotor current, locked-rotor torque, locked-rotor power factor, pull-up torque, breakdown torque, and efficiency and power factor at 2/4, 3/4, and 4/4 load.
(k) Title and classification block as required in 3.6.2(t).
(l) Parts list for repair parts and tools (only) with manufacturer's part numbers.
(m) Phantom view of grease cup (where used) with note indicating that it is a repair part item only.
(n) A connection table of motor leads for two or more speed or dual voltage motor or both. Terminal markings shall be shown on connection and wiring diagrams .

4. QUALITY ASSURANCE PROVISIONS

4.1 Responsibility for inspection. Unless otherwise specified in the contract, the contractor is responsible for the performance of all inspection requirements as specified herein. Except as otherwise specified in the contract, the contractor may use his own or any other facilities suitable for the performance of the inspection requirements specified herein, unless disapproved by the Government. The Government reserves the right to perform any of the inspections set forth in the specification where such inspections are deemed necessary to assure supplies and services conform to prescribed requirements.

4.1.1 Performance test. Tests requiring assembly with the driven auxiliary for which the motor is designed may be conducted at either the plant of the auxiliary machinery contractor or the motor contractor. If the contract or order requires tests other than the tests specified herein, the motor contractor shall prepare a list of these tests and submit it to the Government for acceptance prior to conducting the tests.

4.1.2 Records. Records of the results of in-process inspection and performance tests shall be complete and available to the Government. Test forms which have been prepared by the motor manufacturer shall identify each test as in this specification and shall provide for recording all required data. The test record shall be authenticated by the manufacturer's quality control representative.

Licensed by Information Handling Services

4.2 Sampling.

4.2.1 Sampling for in-process inspection. Processes, parts, subassemblies, assemblies, and complete motors shall be inspected to determine compliance with the requirements of this specification. Sampling and other statistical methods, when used, shall be appropriate to the item inspected, to the manufacturing method involved, and to the previous inspection experience for that item and for that manufacturing method. Statistical and engineering analysis shall be used to evaluate the results of the sampling and statistical methods. The following are authorized for use:

(a) MIL-STD-105.
(b) MIL-STD-414 .

4.2.2 Sampling for periodic tests. Motors shall be selected for periodic performance tests in accordance with table XVIII and shall be subjected to the applicable periodic tests in accordance with table XIX and table XX, as applicable. However, only one periodic shock, and explosionproof enclosure test need be run unless there has been a change in design which affects the shockproof or explosionproof characteristics. A complete set of periodic tests is required after any change in design which affects the performance characteristics. If routine test data reveal variations beyond normal manufacturing tolerances, any *or* all of the periodic tests may be required on a particular motor to demonstrate that it conforms to this specification. If a motor sample does not meet performance requirements under periodic tests, that motor and those of the same design and lot shall be cause for rejection. After the design has been modified and t-he revisions incorporated into the sample, the sample may be resubmitted for tests.

TABLE XVIII. Sampling for periodic testing.

Number of motors offered each 12 months	Number tested[1/]
First motor of given design and rating	1
1-12 motors of identical design and rating	1
13-24 motors of identical design and rating	2
25-50 motors of identical design and rating	3
51-100 motors of identical design and rating	4
101-200 motors of identical design and rating	5
201 motors of identical design and rating	5 plus 1/hundred or fraction over 200

[1/] The first motor tested is included in figuring succeeding quantities if offered for delivery in the same 12 months. 'That is, if the first motor tested is accepted for delivery in the same 12 months as 8 others are offered for delivery, no additional motors need be selected. If the first motor tested is accepted for delivery in the same 12 months as 27 others are offered for delivery, 2 additional for a total of 3 shall be selected.

4.2.3 Sampling for routine tests. Motors offered for delivery on a contract or order shall be subjected to the applicable routine tests specified in table XIX to determine conformance with this specification. Nonconforming motors shall not be offered for delivery.

4.2.4 Sampling for repair parts. Motor repair parts shall be subjected to the inspection specified *in* 4.2.5 and the applicable tests specified in 4.5.1 through 4.5.2.3.

4.2.5 Examination of repair parts. Motor repair parts shall be subjected to the in-process examination required by 4.2.1 to ascertain that the materials and workmanship are in accordance with the applicable specification. This examination shall determine if the repair parts are exact duplicates of those used in the motor.

4.3 Service A motor tests and examination.

4.3.1 Factory inspection during manufacture for service A motors. The motor manufacturer's in-process inspection shall include the applicable item of inspection contained in appendix B herein, selected in accordance with the design, manufacturing methods, and sequence of operations.

4.3.2 Inspection system. The contractor shall provide and maintain an inspection system in accordance with the data ordering document included in the contract or order (see 6.1.2).

Licensed by Information Handling Services

4.3.3 Tests. Routine and periodic tests shall be in accordance with the applicable tests specified table XIX. Vertical motors with sleeve or oil lubricated ball bearings shall be tested in a Vertical position.

TABLE XIX. Routine and periodic tests.

Description of test	Applicable test paragraph	
	Routine tests	Periodic tests
Material	4.3.4.1	4.3.4.1
Air gap measurements (sleeve bearing motors only)	4.3.4.2.1	4.3.4.2.1
Resistance (cold)	4.3.4.3	4.3.4.3
Lubrication	4.3.4.4	4.3.4.4
Airborne noise:		
By observation	4.3.4.5.1	4.3.4.5.1
By instrument:		
Surface ship applications	---------	4.3.4.5.2
Submarine applications	4.3.4.5.2	4.3.4.5.2
Structureborne noise (submarines only)	4.3.4.6.2	4.3.4.6.1
Structureborne noise (surface ships low noise applications only)	4.3.4.6.2	4.3.4.6.1
Dynamic balance	4.3.4.7.2	4.3.4.7.1
End play:		
Sleeve bearing motors	4.3.4.8.1	4.3.4.8.1
Ball bearing motors	4.3.4.8.2	4.3.4.8.2
No-load input (induction motors)	4.3.4.9	4.3.4.9
Pull-up, breakdown and locked-rotor torque	---------	4.3.4.10
No-load phase characteristic data (synchronous motors)	4.3.4.11.1	4.3.4.11.1
Load phase characteristic data (synchronous motors)	---------	4.3.4.11.2
Dielectric strength	4.3.4.12.1 through 4.3.4.12.3	4.3.4.12.1 through 4.3.4.12.3
Effectiveness of enclosure:		
Submersible and watertight where submergence test option is used	4.3.4.13	4.3.4.13
Explosionproof (subsequent test waived)	---------	4.3.4.13
All others	---------	4.3.4.13
Heat run	---------	4.3.4.14.1 through 4.3.4.14.1.1.3
Electrical balance	---------	4.3.4.15
Weight	---------	4.3.4.16
Load test	---------	4.3.4.17
Inclined operation (oil lubricated and sleeve bearing motors only)	---------	4.3.4.18 through 4.3.4.18.4
Shock (subsequent tests waived)	---------	4.3.4.19
Sealed insulation system	4.3.4.20	4.3.4.20

4.3.4 Test procedures.

4.3.4.1 Material tests. While it is not the intention of this specification, In general, to require that all the material used in the construction of motors be tested in accordance with the requirements of specifications referred to in each individual case, the Government shall require such material tests whenever, it considers it necessary to ascertain that the quality of a material used is at least equal to the material specified herein and covered by the referenced specifications, or as shown on the manufacturer's drawing.

4.3.4.2 Air-gap measurements (sleeve bearing motors only).

4.3.4.2.1 The minimum air-gap between the rotor and stator iron shall be measured by feelers or gages. Measurements shall be made in at least 4 places approximately 90 mechanical degrees apart. One of these measurements, where practicable, shall be made at the bottom on each end of the motor. The air-gap at any point on the rotor periphery shall be not less

Licensed by Information Handling Services

than 70 percent of the nominal gap, the nominal gap being half the difference between stator bore and outside diameter of the rotor. Where it is impracticable to measure some or all of the air-gaps directly as specified, an alternate, indirect method may be used at the discretion of the Government, The air-gap measurements shall be recorded and made a part of the test record.

4.3.4.3 Resistance. Resistance of the windings and the temperature at which they are measured shall be taken--and recorded. In the case of wound rotor induction motors, the resistances between collector rings and the temperature of the rotor windings shall also be taken and recorded.

4.3.4.4 Lubrication. The effectiveness of the lubricating system with the motor in its normal position shall be observed during the progress of the other tests, or by special test, as the circumstances may warrent. Oil rings of sleeve bearing motors shall turn freely and there shall be no foaming of the oil. Lubricants similar to those required for service operation shall be used. It shall be demonstrated that the motor lubrication is satisfactory, that the specified limitations of the bearing temperatures have not been exceeded, and there is no suction of lubricant into the electrical windings under any operating condition. The test report shall indicate that such tests have been made.

4.3.4.5 Airborne noise.

4. 3.4.5.1 By instrucment Observation shall be made of motor noise during the progress of testing to determine that the motor is free from any degree of noise comparably-greater than that inherent in the given type and size of motor.

4.3.4.5.2 By instrument. Airborne noise tests shall be conducted with the motor operating at no-load and shall be in accordance with MIL-STD-740.

4.3.4.5.3 Test reports. Test reports shall be submitted in accordance with MIL-STD-740 and the following:

(a) Detailed reports for all periodic tests.
(b) Short reports for all routine tests.

4.3.4.6 Structureborne noise.

4. 3.4.6.1 By instrument (for periodic tests). Structureborne noise tests shall be conducted with the motor operating at–no-load and shall be in accordance with MIL-STD-740.

4.3.4.6.2 By instructment (for routine tests). Structureborne noise tests shall be conducted in accordance with 4.3.4.6.1 for the on-e transducer location which produced the hiqhest reading during the periodic test in 4.3.4.6.1.

4. 3.4.6.3 Test. reports shall be submitted in accordance with 4.3.4.5.3.

4.3.4.7 Dynamic balance.

4. 3.4.7.1 By instrument. The mechanical balance of the completely assembled motor and any special attachments (such as brakes or overspeed switches) shall be measured. The method of test shall be as follows:

(a) Place the motor *on* an elastic mounting so proportioned that the up and down natural frequency shall be at least as low as one-quarter of the operating speed of the motor. To accomplish this, it is required that the elastic mounting be deflected downwards at least by the following amounts due to the weight of the motor. The deformation of the mounting should in no case be *more* than 1/2 the original height of the elastic element:

Revoltions per minute	Compression (inch)
900	1
1,800	1/4
3,600	1/16
7,200	1/64

(b) Prior to assembly, the rotor shall be balanced in a balancing machine with or without bearings. If balanced with bearings, the inside bearing caps shall be supported off the shaft during balancing. Balancing shall be accomplished in two planes for both static and dynamic correction and shall be carried out to the practical limits of balancing machine operation.

Licensed by Information Handling Services

(c) A reliable vibration indicator shall be employed.
(d) The amplitude of vibration shall be measured on the bearing housing in the direction giving the maximum amplitude, with the motor running, the axis of the shaft in normal position and at normal voltage. The motor shall be balanced with 1/2 a standard key in the keyway: that is, a key of full length, flush with the top of the keyway. Preloading washers may be used to damp axial vibrations.

4.3.4.7.2 By hand. The balance shall be checked by "Touch" without the necessity of mounting on an elastic base. If the motor feels to vibrate excessively it shall be retested in accordance with 4.3.4.7.1 to determine whether *or* not the dynamic balance is within the acceptable limit.

4.3.4.8 End play.

4.3.4.8.1 Horizontal sleeve-bearing motors shall be tested for "end-play" while at standstill by alternately pressing and releasing the rotor shaft at each end. The requirements of 3. 5.1.6.3 apply.

4. 3.4.8.2 Ball bearing motors shall be tested for end play at standstill. The requirements of 3.5.1.6.3, as applicable, and MIL-P-17840 apply.

4.3.4.9 No-load input data. The no-load input data test shall consist of taking a no-load input reading with rated voltage and frequency applied at the motor terminals. Where the rotor of the motor is supported by the bearings of the driven auxiliary, this test may be conducted with the motor driving the unloaded auxiliary. Readings of line volts and amperes, watts input and r/rein shall be taken and recorded. The motor shall be run for a sufficient period of time to allow bearing losses to become constant before any readings are taken.

4.3.4.10 Pull-up, breakdown, and locked-rotor torque. Pull-up, breakdown, and lock rotor torque values shall be obtained by test with motor operating at rated voltage. Readings of voltage, current and torque values shall be taken and recorded. For locked-rotor torque test, the locked-rotor condition shall be maintained for 20 seconds. Tests may be initiated with motor at room ambient temperature.

4.3.4.11 Phase characteristic data.

4.3.4. 11.1 No-load data for synchronous motors. The no-load data test consists of taking a series of readings of armature amperees, field amperes and field voltage as the field current is varied from zero to a value that produces 150 percent of rated armature amperes. A reading of amperes in all phases shall be taken and recorded with zero field. Sufficient data to plot a "vee curve"; that is, armature amperes against field amperes shall be taken and recorded. The watts input at the minimum value of stator amperes should check the sum of the stator copper, core, friction, and windage losses. This test shall be conducted at rated voltage and rated frequency.

4.3.4. 11.2 Load characteristics. The load characteristics test shall be similar to the no-load test except that data need not be obtained for zero field. Unless otherwise specified in the contract or order, this test shall be conducted under rated load conditions.

4.3.4.12 Dielectric tests.

4.3.4.12.1 General. The dielectric test shall be conducted after all other tests have been completed. The frequency of the testing voltage shall be not less than 60 Hz and shall approximate a sine wave. If the insulation resistance of the windings is known to be lower than specified, due to dirt or moisture or damage to windings, this shall be remedied before the application of the dielectric test voltage. The dielectric test shall be conducted on the completely assembled machine and not upon individual parts. An exception is made in case of repair parts which require dielectric tests; for example, repair coils and repair rotating elements with insulated windings. In the case of motors using capacitors, the dielectric test on the motor may be conducted with the capacitor disconnected. The capacitor shall be given a separate dielectric test according to the rating of the capacitor used.

4. 3.4.12.2 Measurement of test voltage. The measurement of the voltage used in dielectric tests shall be made by the voltmeter method whereby the instrument derives its voltage from the high-volt circuit either directly or by means of a voltmeter coil placed in the testing transformer, or through an auxiliary ratio transformer. In any case, if the capacitance of the machine to be tested is such as to cause wave distortion, the testing voltage shall be checked by a crest-voltage meter. If the crest-voltage meter is calibrated in crest volts, its reading shall be reduced to the corresponding root mean square sinusoidal value by multiplying by 0.707.

Licensed by Information Handling Services

4.3.4.12.3 Points of application. Test voltage shall be successively applied between each electric circuit and all other electric circuits and metal parts grounded. Test voltage shall be applied in such a manner as to preclude the possibility of pitting the bearings *in* case of insulation failure. Voltage need not be applied between stationary and rotating windings.

4.3.4.13 Effectiveness of enclosure. Motors shall be tested as specified in MIL-E-2036 except that hose test of dripproof enclosures is waived.

4.3.4.14 Heat-run test.

4 .3.4.14.1 General. The heat-run test for special purpose motors shall utilize imbedded thermocouples in accordance with the following and methods 1 and 2 of MIL-E-917 for the first item. Subsequent periodic tests may be in accordance with method 2 of MIL-E-917. The heat-run test for continuous duty motors shall be in accordance with the following:

(a) Rated motor load - 100 percent.
(b) Voltage - rated.
(c) Time - until all temperatures are constant.

Motor load may be obtained by maintaining the current or watts input corresponding to rated motor hp output.

4. 3.4.14.1.1 Details of temperature tests.

4.3.4.14.1.1.1 Normal load heat runs on continuous duty motors shall be continued until constant temperatures have been attained in all parts of the motor. For motors having several continuous ratings, the heat run shall be conducted using the rating giving the highest temperature rises. In cases where the highest temperature *rises* cannot be determined prior to the test, the motor shall be tested separately for each rating. Temperature measurements by thermocouple shall be taken and recorded during the progress of the heat run to determine when the constant operating temperature has been reached. It shall be considered that constant temperatures have been reached when at least four consecutive readings taken at 15-minute intervals show no increase in the temperature in any part of the motor. The resistance rise shall then be determined in accordance with the procedures for method 2 of MIL-E-917.

4. 3. 4.14.1.1.2 The duration of the temperature test of a motor with a short-time or overload requirement shall be the time specified for that rating. Intermittent and varying duty motors shall be tested at the specified duty cycle. In lieu thereof, the motors may be tested as short-time duty motors of sufficient rating to meet the actual load requirements. The manufacturer shall submit to the command or agency concerned evidence that the short-time duty rating used for test purposes is equivalent to the required duty cycle.

4,3.4.14.1.1.3 When temporary air filters are to be used, the tests of 4.3.4.14.1 shall be repeated with the filter media specified (see 6.1.1), attached to the air intakes. Three thicknesses of filter media shall be used to simulate a loaded or dirty filter. Temperature limits of 3.1.30 shall apply. Test data from both tests shall be shown on the drawing.

4.3.4.15 Electrical balance. Line currents measured during the heat run test may be used to indicate electrical balance. Requirements of 3.1.13 apply.

4.3.4.16 Weight. The weight of motor and rotor shall be taken and recorded.

4.3.4.17 Load test. With the motor operating at rated voltage and frequency simultaneous reading of the voltage, frequency, amperes in each phase, speed r/rein and watts shall be taken at 0, 1/4, 1/2, 3/4, and 4/4 of rated hp, where hp load may be maintained by current or watt input or by torque. The motor shall be approximately at its normal operating temperature during these tests.

4.3.4.18 Inclined operation. Sleeve bearing and oil lubricated ball bearing motors only.

Licensed by Information Handling Services

4 .3.4.18.1 Inclination tests for horizontal motors shall, in general, cover the following test positions:

(a) Surface ship motors:
Shaft inclined 15 degrees, front end low.
Shaft inclined 15 degrees, rear end low.
Shaft horizontal, motor base tilted 15 deqrees to the right.
Shaft horizontal, motor base tilted 15 degrees to the left.
(b) Submarine motors same as (a) except that inclination shall be at 45 degrees.

4.3.4.18.2 Under each of the positions of inclination specified in 4. 3.4.18.1 the motor shall be run for a period of not less than 30 minutes for surface ship motors and 1 hour for submarine motors. This test may be made on the combined motor-driven auxiliary. The combined motor-driven auxiliary shall be run at not less than its maximum service speed, and the driven auxillary need not be loaded. During the progress of these tests it shall be ascertained that the mechanical balance is as good as it was in the normal horizontal position, that there is no pouncing or grinding at the bearings, and that the lubrication is satisfactory. If the motor is provided with oil-ring lubrication, it shall be ascertained that the rings do not rub or strike against the sides or ends of the oil well, that they do not "dance" or show pronounced irregularity of movement, and that the shaft does not sling oil into the motor. For submarine motors, the bearing or lubricating oil temperature at the completion of test shall be recorded and shown on the drawing.

4.3.4.18.3 Vertical motors shall be tested by inclining them to an angle of 15 degrees for surface ship motors and 45 degrees for submarine motors from their normal Position, in any direction (that direction which imposes the most severe condition, if there be any dissymmetry) and for a period of 30 minutes for surface ship motors and 1 hour for submarine motors. If desired, this test may be made on the combined unit used for the special operating test. (Vertical motor-driven auxiliaries shall be tested by inclining them to an angle of 15 degrees for surface ship units and 45 degrees for submarine units from their normal position, in each of four different directions; namely, (a) forward, (b) backward, (c) to the right, and (d) to the left. observations shall be made as specified in 4. 3.4.18.2 for horizontal motors and combined motor-driven auxiliaries.)

4. 3.4.18.4 The suitability of motor-driven auxiliaries for operation when a ship is rolling 45 degrees for surface ships and 60 degrees for submarine motors to either side shall be determined by inspection of design.

4.3.4.19 High-impact shock test. Tests for lightweight motors shall be nine blows delivered while the motor is operating under no load at nominal speed. An additional nine blows are to be delivered with the motor stationary; separate motors may be submitted for each series of nine blows if desired by the manufacturer. Tests shown in MIL-S-901 under group I and group III in the horizontal and inclined orientation for medium weight motors shall be with the motor running under no load at nominal speed. Tests under group II shall be with the motor stationary. For inclined orientation medium weight motors shall be mounted with the motor shaft axis inclined and shaft extension up. Separate motors may be submitted for each series of three blows if desired by the manufacturer. Tests shall be as specified in MIL-S-901 and with other features of the test as follows:

(a) Required type of shock test. Type A, B, or C as specified (see 6.1.1).
(b) Weight designation of the shock test (as required by the motor). Motors weighing 250 pounds or less shall be tested on the lightweight shock testing machine. Motors weighing in excess of 250 pounds and up to 6,000 pounds shall be tested on a medium weight shock testing machine. Motors weighing aver 6,000 pounds shall be tested on a floating shock test platform. When a motor shaft supports a part of a driven auixiliary, such as a pump impeller or a clutch-type coupling, the motor shall be shock tested with the shaft loaded with the part or with an equivalent weight for that part.
(c) Required class of equipment. Class I, unless otherwise specified in the contract or order
(d) Required GRADE of equipment. Grade A.
(e) Difinition of "failure to perform principal functions.".
(1) Breakage of any parts, including mounting bolts.
(2) Appreciable distortion or dislocation of any parts such as mounting feet, poles, coils, brushes, and bearings.
(3) Values of speed differing by more than 1 percent of the preshock test values and no load input watts differing by more than 5 percent.

Licensed by Information Handling Services

(4) A mechanical balance of more than two times the value of balance specified in 3.5.1.9.

(5) Either a bearing or oil temperature rise or both in excess of that permitted in table I.

(6) Low dielectric strength. The motor shall be operated to obtain approximately rated temperature rise of iron and windings, then disconnected from its load or from its source of power and a dielectric strength test made to check the condition of insulation. This dielectric strength test shall be made in accordance with 4.3.4.12 through 4.3.4.12.3 except that it shall be made with an applied voltage equal to 65 percent. Under these conditions, insulation failures shall be cause for rejection,

(7) Failure to pass inspection. The motor shall be disassembled following checks (e) (1) to (e) (6) inclusive, and inspected thoroughly for damage. The extent of disassembly need be only to the point where the condition of the motor can easily be observed. The effects of the shock and subsequent check tests on the structure, bearings, and insulation shall be carefully observed and recorded.

(f) Method of mounting on shock-testing machine. Mounting adapters shown on the following figures of MIL-S-901 shall be used:

(1) Figure 6 for motors to he tested on the shock-testing machine for lightweight equipment.

(2) Figures 9-1, 9-2 and 10-1 for motors to be tested on the shock-testing machine for medium weight equipment.

(3) As required by MIL-S-901 for motors to be tested on the floating shock test platform.

(g) Number of motors to be tested. Unless otherwise specified in the contract or order, one motor of the longest core length in any one diameter and of similar construction out of each group of enclosures listed below, shall be shock-tested:

(1) Group 1:
a. Dripproof protected.

(2) Group 2:
a. Watertight.
b. Spraytight.
c. Totally enclosed.

(3) Group 3:
a. Watertight fan-cooled.
b. Spraytight fan-cooled.
c. Totally enclosed fan-cooled.

(4) Group 4:
Explosionproof, group D.

(5) Group 5:
a. Exploslonproof fan-cooled, group D.

(6) Group 6:
a. Submersible, all degrees.

If the manufacturer desires he may submit a motor frame of less than the longest core length to the shock-test. However, satisfactory conformance with the shock requirements will be considered for motors having a core length equal to or less than the core length of the motor tested.

(h) Disposal of shock-tested motors.

1) Motor which has been subjected to the high-impact shock test and have failed to conform to the requirements will be rejected either in whole or any of the parts.

(2) Motors which have been subjected to the high-impact shock test and have successfully passed this test may be offered as an item under the contract provided the post-shock-tests specified hereinafter are satisfactorily passed and provided the mechanical corrective measures specified hereinafter are satisfactorily met. Mounting flanges connecting directly to the driven auxiliary shall be replaced in the event of minor deformation. Minor deformation affecting alinements, including alinements with the auxiliary, shall be corrected. Minor deformations shall be defined as those which do not cause unqualified rejection of the design under the high-impact shock test but which are in excess of the dimensional tolerances specified on the applicable motor drawing. Prior to delivery of the motor, ball bearings shall be replaced.

Licensed by Information Handling Services

(i) Shock extension. Motor shock test may be extended from a previously satisfactory shock test of a motor with a *longer* stator core length (same outside diameter and similar construction) to a motor with an equal or shorter core length. The manufacturer shall submit a letter of request together with the the drawings of each motor for review by the command or agency concerned. After review the manufacturer shall note on the drawinq the test number and date of original shock test, the inspector's letter, serial number and date, and the serial number and date of the letter authorizing shock extension.

(j) Where the motor will be shock tested as part of an overall package, shock test of the motor alone is not required.

4.3.4.20 Sealed insulation system. The stator, includinq lead connections, shall be subjected to and meet the requiements for short time test procedures of IEEE STD-429 (ANSI C50.26).

Note: While procedures of IEEE STD-429 (ANSI C50.26) are specified for form wound coils, they are equally applicable to random wound coils.

4.4 Service C.

4.4.1 Motor tests and examination. Inspection of *service C* motors shall be as specified in 4.2.1 through 4.2.3 Service C motors shall be tested in accordance with table XX, and examined as specified in 4.4.1.1.

TABLE XX. Service C tests.

Description of test	Applicable test paragraph	
	Routine tests	Periodic tests
Material	4.3.4.1	4.3.4.1
Air-gap measurements (sleeve bearing motors only)	4.3.4.2.1	4.3.4.2.1
Resistance (cold only)	4.3.4.3	4.3.4.3
Lubrication	4.3.4.4	4.3.4.4
Dynamic balance (by hand)	4.3.4.7.2	4.3.4.7.2
End play:		
Sleeve bearing motors	4.3.4.8.1	4.3.4.8.1
Ball bearing motors	4.3.4.8.2	4.3.4.8.2
No-load input (induction motors)	4.3.4.9	4.3.4.9
Load test	---------	4.3.4.17
Pull-up, breakdown and locked rotor torque	---------	4.3.4.10
Dielectric strength	4.3.4.12.1 through 4.3.4.12.3	4.3.4.12.1 through 4.3.4.12.3
Effectiveness of enclosure:		
Submersible	4.3.4.13	4.3.4.13
Explosionproof (subsequent test waived)	--------	4.3.4.13
All others	--------	4.3.4.13
Sealed insulation system	4.3.4.20	4.3.4.20

4.4.1.1 Each motor shall be subjected to a thorough examination to ascertain that the material, workmanship, and design are in conformance with this specification. The fit of parts shall be observed with particular reference to the interchangeability of such parts as are likely to require replacement during the normal service life of the motor,

4.5 Repair parts tests.

4.5.1 Coil tests. Resistance readings at ordinary room temperature shall be made upon repair coil windings and the results checked against the values obtained for the coils of the motors. If the resistances are materially different from those of the motor coils, the repair coils shall not be offered for delivery. Repair form wound coils shall be submitted to a dielectric test.

Licensed by Information Handling Services

4.5.2 Repair rotor tests. Tests on repair rotors shall comprise those routine tests normally conducted on the motor itself. Any rotor that has been routine tested in the frame of any motor of the size and design on order may be designated as the repair rotor . In the case of repair rotors on subsequent contracts or orders for which suitable frames are not available at the place of manufacture, the tests specified in 4.5.2.1 through 4.5.2.3 shall be conducted.

4.5.2.1 General examination. The rotor shall be subjected to a thorough examination to ascertain that the material, workmanship, dimensions, and design are in conformance with specified requirements.

4.5.2.2 Dynamic balance. The rotor shall be dynamically balanced.

4.5.2.3 Dielectric strength. Where applicable, the requirements of 4.3.4.12.1 through 4.3.4.12.3 shall apply.

4.6 Suitability tests. In addition to the examination and tests of 4.3 through 4.4.1.1, suitability tests s-hall be conducted to assure the adequacy of materials or manufacturer's processes used in manufacturing of motors. These are one time tests and need not be repeated unless the manufacturer changes either the material *or* processes.

Test	Requirements	Test reference
Suitability test for sealed insulation system	3.1.31.1	Appendix A
Suitability test for slot cell insulation	3.1.30.1	MIL-E-917 appendix
Suitability test for class H and N insulation system	3.1.32	MIL-E-917 appendix
Suitability test for core material	3.5.1.5.5	IEEE 432

4.7 Inspection of preparation for delivery. Preservation-packaging, packing, and marking shall be inspected for compliance with section 5 of this document.

5. PREPARATION FOR DELIVERY

(The preparation for delivery requirements specified herein apply only for direct Government procurements. For the extent of applicability of the preparation for delivery requirements of referenced documents listed in section 2, see 6.3.)

5.1 Preservation-packaging and marking. Motor and accesories repair parts and tools shall be preserved-package level A, B or C as specified (see 6.1.1) and marked in accordance with MIL-E-16298.

5.2 Cushioning, dunnage and wrapping materials.

5.2.1 Level A Preservation-packaging level A and B packing.

Use of all types of loose-fill materials for applications such as cushioning, filler, stuffing and dunnage for material destined for shipboard use is prohibited. Cushioning and wrapping materials selected, whenever available, shall exhibit improved performance characteristics for resistance to fire. Examples are:

UU-P-268	Type III, grade C or D
PPP-C-850	Grade SE, type I or II only
PPP-C-1120	Type III or IV, class C
MIL-R-6130	Grade A
MIL-R-20092	Class 1 or 4

Licensed by Information Handling Services

5.2.2 Level C preservation-packaging and packing.

Unless otherwise specified in the contract or order use of all types of loose-fill materials for applications such as cushioning, filler, stuffing and dunnage for material destined for shipboard use is prohibited. If specified in the contract or order, unit packages and containers (interior and exterior) shall be marked or labeled as follows:

"CAUTION

Contents cushioned etc. with loose-fill material.
Not to be taken aboard ship.
Remove and discard loose-fill material before shipboard storage.
If required, recushion with cellulosic material bound fiber, fiberboard, or transparent flexible cellular material. "

5.3 Special requirements (submarine motors).

(a) The method of mounting each motor within its shipping container or handling device shall insure the integrity of the requirements of MIL-STD-740.

(b) In addition to the marking specified in 5.1, marking of shipping containers and handling devices for-motors shall be in accordance with' MIL-STD-740.

6. NOTES

6.1 Ordering data.

6.1.1 Procurement requirements. Procurement documents should specify the following:

(a) Title, number, and date of this specification.
(b) Service (see 1.2) and whether motor is for submarine service (see 3.5.4) or low noise surface ship application (see 3.5.5.).
(c) Ambient temperature (see 3.1.1).
(d) Voltage (see 3.1.3).
(e) Duty (specified time of duty cycle) (see 3.1.7 through 3.1.7.5).
(f) Enclosure (see 3.1.8). "
(g) Horsepower '(see 3.1.9.1).
(h) R/rein and speed (see 3.1.10).
(i) Type (see 3.1.11).
(j) Design of motor (see 3.1.12.1 and 3.1.31.2 (b)).
(k) Slip (see 3.1.12.6).
(l) Mounting (see 3.1.19).
(m) Bearing types (see 3.1.22.1).
(n) Conduit openings for motors over 250 horsepower (see 3.1.24).
(o) Motors with sealed insulation system (see 3.1.31).
(p) Repair parts (see 3.4.2).
(q) Mechanical balance (see 3.5.1.9).
(r) Temporary air filter and media (see 3.5.1.17 and 4.3.4.14.1.1.3).
(s) Whether non-magnetic motors are required (see 3.5.2).
(t) Submarine service (see 3.5.4).
(u) Structureborne noise levels for surface ships (see 3.5.5).
(v) Service C motors (see 3.5.6).
(w) Type of shock test (see 4.3.4.19(a)).
(x) Level of preservation, packaging, packing and marking required (see 5.1).

6.1.2 Data requirements. When this specification is used in a procurement which invokes the provision of the "Requirements for Data" of the Armed Services Procurement Regulations (ASPR), the data identified below, which are required to be developed by the contractor, as specified on an approved Data Item Description (DD Form 1664), and which are required to be

Licensed by Information Handling Services

delivered to the Government, should be selected and specified on the approved Contract Data Requirement List (DD Form 1423) and incorporated in the contract. When the provisions of the "Requirements for Data" of the ASPR are not invoked in a procurement, the data required to be developed by the contractor and required to be delivered to the Government should be selected from the list below and specified in the contract.

Paragraph	Data requirements	Applicable DID	Option
3.6	Drawings, engineering and associated lists, level 2 (production prototype and limited production)	DI-E-7014	Design activity designation - contractor Drawing number - contractor Parts lists - Intergral or separate Certification data sheets - required Microfilm of drawings - required
4.3.2	Inspection system program plan	DI-R-4803	-----

(Copies of data item descriptions required by the contractors in connection with specific procurement functions should be obtained from the procuring activity or as directed by the contracting officer. Unless otherwise indicated, the issue in effect on date of invitation for bids or request for proposal shall apply.)

6.1.2.1 The data requirements of 6.1.2 and any task in section 3, 4, or 5 of the specificaiton required to be performed to meet a data requirement may be waived by the procuring/purchasing activity upon certification by the offeror that identical data were submitted by the offeror and accepted by the Government under a previous contract for identical item procured to this specification. This does not apply to specific data which may be required for each procurement regardless of whether an identical item has been supplied previously (for example test reports) .

6.2 Definitions. The following definitions shall apply to the various technical terms wherever such terms appear in this specification.

6.2.1 Continuous duty. Continuous duty is a requirement of service that demands operation at a substantially constant load for an indefinitely long time (see 3.1.7.1).

6.2.2 Intermittent duty. Intermittent duty is a requirement of service that demands operation for alternate intervals of (a) load and no-load, (b) load and rest, or (c) load, no-load, and rest (see 3.1.7.2).

6.2.3 Varying duty. Varying duty is a requirement of service that demands operation at loads and for intervals of time, both of which may be subject to wide variation (see 3.1.7.3).

6.2.4 Short-time duty. Short-time duty is a requirement of service that demands operation at substantially constant load for a short and definitely specified time (see 3.1.7.4).

6.2.5 Constant-speed motor. A constant-speed motor is one of which the normal speed of operation is constant or constant within tolerances; for example, a synchronous motor or an induction motor with small slip.

6.2.6 Multispeed motor. A multispeed motor is one which can be operated at any of two or more definite speeds, each being practically independent of the load.

6.2.7 Adjustable speed motor. An adjustable speed motor is one the speed of which can be varied gradually over a considerable range, but when once adjusted remains practically unaffected by the load; for example, a commutator motor with brush-shifting feature.

6.2.8 Base speed of adjustable speed motor. The base speed of an adjustable speed motor is the lowest speed obtained at rated- and rated voltage at normal operating temperatures.

Licensed by Information Handling Services

6.2.9 Varying speed motor. A varying speed motor is one the speed of which varies with the load, ordinarily decreasing when the load increases, such as a high-slip motor.

6.2.10 Adjustable varing speed motor. An adjustable varying speed motor is one the speed of which can be adjusted gradually,but when once adjusted for a given load, will vary in considerable degree with change in load, such as a wound rotor induction motor.

6.2.11 Front (of motor). The front of a motor is the end opposite the coupling.

6.2.12 Back (of motor). The back of a motor is the end which carries the coupling or driving pulley.

6.2.13 Squirrel-cage induction motor. A squirrel-cage induction motor is one in which the secondary circuit consists of a squirrel-cage winding suitably disposed in the secondary core.

6.2.14 Wound-rotor induction motor. A wound-rotor induction motor is an induction motor in which the second-it consists of a polyphase winding or coils whose terminals are either short circuited or closed through suitable circuits.

6.2.14.1 Collector-ring starting motor. Collector-ring starting is used where the starting torque requirements are particularly severe and a resistance (secondary resistance type) starter is provided for starting duty only. The resistance is short-circuited when the load has been brought up to speed and thenceforth the motor has constant-speed characteristics .

6.2.14.2 Collector-ring starting and running motor. Collector-ring starting and running is used where adjustable varying-speed characteristics are desired. A resistance starter (secondary resistance type) Is provided for both starting and running duty, the resistors being of the continuous duty type.

6.2.15 Synchronous motor. A synchronous motor is a motor in which the average speed of normal operation is exactly proportional to the frequency of the system to which it is connected. Synchronous motors usually have direct-current field excitation.

6.2.16 Efficiency. The efficiency of a machine is the ratio of the power output to the total power input. It is expressed as a percentage.

6.2.17 Thermal protector (inherent overheating protective device) . A thermal protector is a protective device which is responsive to motor current and temperature whose purpose, when applied to a motor, is to protect the motor against excessive overheating due to overload or failure to start.

6.2.18 Design. The design designation specified in 6.2.13 identifies a squirrel cage motor designed to withstand full-voltage starting developing specified locked-rotor torque, pull-up torque, breakdown torque, locked rotor current and slip.

6. 2.18.1 Design B. Design B motors are standard general purpose motors having low starting current, normal torque and normal slip. These motors are widely used in such Naval shipboard applications as pumps, fans, blowers and machine tools.

6.2.18.2 Design A. Design A motors have characteristics similar to design B motors except that breakdown torques and starting currents are higher. Because of higher starting currents these motors are limited in their applications aboard ships.

6. 2.18.3 Design C. Design C motors have high breakaway torque, low starting currents and normal slip. These motors are suitable for applications requiring high breakaway torques during starting, such as compressors, conveyors and reciprocating pumps.

6.2.18.4 Design D. Design D motors have a high breakaway torque with high slip. These motors are suitable or high inertia loads such or punch presses, shears or other high inertia auxiliaries where energy is stored in fly wheel under heavy fluctuating load conditions.

6.2.18.5 Design F. Design F motors have low starting torque, low starting current and low breakdown torque.

6.2.18.6 Design FF. Design FF motors have characteristics similar to design F motors except that the starting torque is lower than design FF.

Licensed by Information Handling Services

6.2.19 Integral hp motor. An integral-hp motor is one built in a frame size 182 or larger as shown in table B of figures 1 through 4 and as shown in frame size table for a.c. motors of MIL-P-17840 and MIL-F-18953.

6.2.20 Service A. A service "A" motor is a high grade, class H.I. shockproof motor meeting the requirements specified in 3.1 to 3.5.1.17 inclusive.

6.2.21 Service C. A service "C" motor is a marine type commercial motor meeting the requirements specified in 3.1 to 3.4 inclusive and 3.5.6.1 through 3.5.6.3.

6.2.22 Sealed insulation system. A sealed insulation system is an insulation system which through the use of materials and processes, seals the windings and protects them against contaminants found in severe environmental conditions.

6.3 Sub-contracted material and parts. The preparation for delivery requirements of referenced documents listed in section 2 do not apply when material and parts are procured by the contractor for incorporation into the equipment and lose their separate identity when the equipment is shipped.

6.4 Changes from previous issue. The symbol "#" is not used in this revision to identify changes with respect to the previous issue, due to the extensiveness of the changes.

Preparing activity:
Navy - SH
(Project 6105-N122)

Licensed by Information Handling Services

Licensed by Information Handling Services

ALTERNATING-CURRENT "T" FRAME MOTORS SHALL BE IN ACCORDANCE WITH THE REQUIREMENTS OF THIS SPECIFICATION AND SHALL CONFORM TO THE FOLLOWING REQUIREMENTS:

SERVICE	"A"
AMBIENT TEMPERATURE	50° C
DUTY	CONTINUOUS
SPEED CLASS	CONSTANT
NUMBER OF PHASES	THREE
FREQUENCY	60 HERTZ
VOLTAGE	440 VOLTS
CLASSIFICATION	SQUIRREL CAGE INDUCTION
DESIGN	B AND C
BEARINGS	BALL (SEE SECTION HEADED "BEARING")
MOUNTING	HORIZONTAL (SEE SECTION HEADED "DIMENSIONS")
INSULATION	CLASS B, F, H or N

SIZES, HORSEPOWER, SPEED, FRAME AND DEGREE OF ENCLOSURE SHALL BE IN ACCORDANCE WITH THE TABLE "A" AND, WHERE A CHOICE EXISTS, WILL BE SPECIFIED IN THE CONTRACT OR ORDER.

BEARING: BALL BEARINGS SHALL BE ONE OF THE TYPES IN ACCORDANCE WITH 3.5.1.6. THE SIZES USED FOR THE VARIOUS FRAMES SHALL CONFORM TO THE REQUIREMENTS OF TABLE "B" BEARING TOTAL TEMPERATURE SHALL NOT EXCEED 110° C.

DIMENSIONS: MOTORS SHALL BE SUITABLE FOR FLOOR, BULKHEAD AND CEILING MOUNTING. MOUNTING DIMENSIONS SHALL BE IN ACCORDANCE WITH THE DETAILED REQUIREMENTS TABULATED ON THIS FIGURE.

WEIGHTS: COMPLETE MOTOR WEIGHTS SHALL NOT EXCEED THE MAXIMUM LIMITS LISTED IN TABLE "B"

TEMPERATURE NOT TO EXCEED CLASS B TEMPERATURE LIMITS GIVEN IN TABLE XIII

TABLE A - BASIC FRAME SIZES FOR ALTERNATING CURRENT DESIGN B AND C CONSTANT SPEED "T" FRAME MOTORS.

Hp	1/ 3600		1800		1200		900	
	DPP	TEFC	DPP	TEFC	DPP	TEFC	DPP	TEFC
1	182TN	182TN	182TN	182TN	182TN	182TN	182TN	184TN
1-1/2	182TN	182TN	182TN	182TN	182TN	184TN	184TN	213TN
2	182TN	182TN	182TN	182TN	184TN	213TN	213TN	215TN
3	182TN	184TN	182TN	184TN	213TN	215TN	215TN	254TN
5	182TN	213TN	184TN	213TN	215TN	254TN	254TN	256TN
7-1/2	184TN	215TN	213TN	215TN	254TN	256TN	256TN	256TN
10	213TN	254TN	215TN	254TN	256TN	256TN	286TN	286TN
15	215TN	256TN	254TN	256TN	286TN	286TN	286TN	326TN
20	254TN	286TN	256TN	286TN	286TN	326TN	326TN	326TN
25	256TN	286TN	286TN	286TN	326TN	326TN	326TN	365TN
30	286TN	326TN	286TN	326TN	326TN	365TN	365TN	365TN
40	286TN	326TN	326TN	326TN	365TN	365TN	365TN	405TN
50	326TN	365TN	326TN	365TN	365TN	405TN	405TN	405TN
60	326TN	365TN	365TN	365TN	405TN	405TN	405TN	445TN
75	365TN	405TN	365TN	405TN	405TN	445TN	445TN	445TN
100	365TN	445TN	405TN	445TN	445TN	445TN	445TN	-----
125	405TN	445TN	405TN	445TN	445TN	445TN	-----	-----
150	445TN	445TN	445TN	445TN	-----	------	-----	-----
200	445TN	-------	445TN	-------	-----	------	-----	-----
250	445TN	-------	------	-------	-----	------	-----	-----

1/

NOTES: 1. DPP - DRIPPROOF-PROTECTED.
2. TEFC-TOTALLY ENCLOSED. FAN COOLED.
3. SPRAYTIGHT FAN COOLED, WATERTIGHT FAN COOLED AND EXPLOSION PROOF FAN COOLED HAVE SAME FRAME ASSIGNMENTS AS TOTALLY ENCLOSED FAN COOLED.
4. SHORT SHAFT EXTENSIONS (TNS) MAY BE FURNISHED FOR COUPLED SERVICE AS SHOWN IN TABLE B.
5. FRAME SIZE MAY BE INCREASED BY ONE (1) FRAME SIZE FOR TWO-POLE MOTORS WHERE A NON-MAGNETIC ONE-PIECE SHAFT IS REQUIRED.

SHJ1143

TOLERANCES

D DIMENSIONS		
FRAMES 182TN - 326TN	+0",	-1/32"
FRAMES 365TN - 445TN	+0",	-1/16"
"2E" DIMENSION	+1/64"	,-1/64"
"2F" DIMENSION	+1/64"	,-1/64"
U DIMENSION		
SHAFT DIAMETERS 1" - 1-1/2" INC.	+0.0000",	-0.0005"
SHAFT DIAMETERS 1-5/8" - 2-7/8" INC.	+0.000"	,-0.001"
KEYWAYS WIDTH	+0.002"	,-0.000"

KEYWAYS DEPTH

SHAFT DIAMETER	KEY DIMENSION	BOTTOM OF KEYSEAT TO OPPOSITE SIDE OF SHAFT
1-1/8"	1/4" X 1/4"	.986" - .971"
1-1/4"	1/4" X 1/4"	1.112" - 1.097"
1-3/8"	5/16" X 5/16"	1.201" - 1.186"
1-5/8"	3/8" X 3/8"	1.416" - 1.401"
1-7/8"	1/2" X 1/2"	1.591" - 1.576"
2-1/8"	1/2" X 1/2"	1.845" - 1.830"
2-3/8"	5/8" X 5/8"	2.021" - 2.006"
2-7/8"	3/4" X 3/4"	2.450" - 2.435"
3-3/8"	7/8" X 7/8"	2.880" - 2.865"

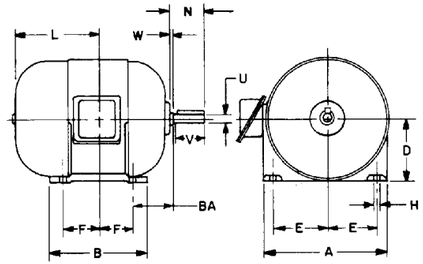

CONVENTIONAL MOTOR FRAME

TABLE B - STANDARD MOUNTING DIMENSIONS, BEARING SIZES, AND MAXIMUM WEIGHTS FOR A.C. "T" FRAME MOTORS.

FRAME NUMBER	KEY WAY NOMINAL		A (MAXIMUM)	B (MAXIMUM)	D	E	F	BA (NOMINAL)	H	N-W	U	V (MINIMUM)	L MAXIMUM		MAXIMUM WEIGHT (POUNDS)		FRONT END BEARING MINIMUM	DRIVE END BEARING MINIMUM	FRAME NUMBER
	WIDTH	DEPTH											DRIPPROOF PROTECTED	WT. T.E., SPT	DRIPPROOF PROTECTED	WT. T.E., SPT, EXP			
182TN	1/4	1/8	9	6-1/2	4-1/2	3-3/4	2-1/4	2-3/4	17/32	2-3/4	1-1/8	2-1/2	6-1/4	7-3/4	70	90	205	206	182TN
184TN	1/4	1/8	9	7-1/2	4-1/2	3-3/4	2-3/4	2-3/4	17/32	2-3/4	1-1/8	2-1/2	6-3/4	8-1/4	85	115	205	206	184TN
213TN	5/16	5/32	10-1/2	7-1/2	5-1/4	4-1/4	2-3/4	3-1/2	21/32	3-3/8	1-3/8	3-1/8	7-1/4	9-1/2	120	145	206	207	213TN
215TN	5/16	5/32	10-1/2	9	5-1/4	4-1/4	3-1/2	3-1/2	21/32	3-3/8	1-3/8	3-1/8	7-3/4	10	140	175	206	207	215TN
254TN	3/8	3/16	12-1/2	10-3/4	6-1/4	5	4-1/8	4-1/4	25/32	4	1-5/8	3-3/4	9	11-3/4	215	260	207	209	254TN
256TN	3/8	3/16	12-1/2	12-1/2	6-1/4	5	5	4-1/4	25/32	4	1-5/8	3-3/4	9-3/4	12-3/4	265	320	207	209	256TN
286TN	1/2	1/4	14	14	7	5-1/2	5-1/2	4-3/4	25/32	4-5/8	1-7/8	4-3/8	10-3/4	14	390	460	207	309	286TN
286TNS	3/8	3/16	14	14	7	5-1/2	5-1/2	4-3/4	25/32	3-1/4	1-5/8	3	10-3/4	14	390	460	207	209	286TNS
326TN	1/2	1/4	16	15-1/2	8	6-1/4	6	5-1/4	15/16	5-1/4	2-1/8	5	11-3/4	15-1/4	550	650	309	311	326TN
326TNS	1/2	1/4	16	15-1/2	8	6-1/4	6	5-1/4	15/16	3-3/4	1-7/8	3-1/2	11-3/4	15-1/4	550	650	309	309	326TNS
365TN	5/8	5/16	18	16-1/4	9	7	6-1/8	5-7/8	1-1/16	5-7/8	2-3/8	5-5/8	12-1/2	16-1/2	680	1050	310	313	365TN
365TNS	1/2	1/4	18	16-1/4	9	7	6-1/8	5-7/8	1-1/16	3-3/4	1-7/8	3-1/2	12-1/2	16-1/2	680	1050	310	310	365TNS
405TN	3/4	3/8	20	17-3/4	10	8	6-7/8	6-5/8	1-1/16	7-1/4	2-7/8	7	14	18-1/2	1000	1250	312	315	405TN
405TNS	1/2	1/4	20	17-3/4	10	8	6-7/8	6-5/8	1-1/16	4-1/4	2-1/8	4	14	18-1/2	1000	1250	312	312	405TNS
445TN	7/8	7/16	22	20-1/2	11	9	8-1/4	7-1/2	1-3/16	8-1/2	3-3/8	8-1/4	16-1/4	21	1375	1900	313	317	445TN
445TNS	5/8	5/16	22	20-1/2	11	9	8-1/4	7-1/2	1-3/16	4-3/4	2-3/8	4-1/2	16-1/4	21	1375	1900	313	313	445TNS

FIGURE 1. STANDARDS FOR INTEGRAL HORSEPOWER ALTERNATING CURRENT GENERAL PURPOSE "T" FRAME MOTORS.

Licensed by Information Handling Services

ALTERNATING-CURRENT "T" FRAME MOTORS SHALL BE ACCORDANCE WITH THE REQUIREMENTS OF THIS SPECIFICATION AND SHALL CONFORM TO THE FOLLOWING REQUIREMENTS:

SERVICE	"A"
AMBIENT TEMPERTURE	50°C
DUTY	CONTINUOUS
SPEED CLASS	CONSTANT
NUMBER OF PHASES	THREE
FREQUENCY	60 HERTZ
VOLTAGE	440 VOLTS
CLASSIFICATION	SQUIRREL CAGE INDUCTION
DESIGN	B AND C
BEARINGS	BALL (SEE SECTION HEADED "BEARINGS")
MOUNTING	HORIZONTAL OR VERTICAL
INSULATION	CLASS B, F, H OR N

SIZES, HORSEPOWER, SPEED, FRAME AND DEGREE OF ENCLOSURE SHALL BE IN ACCORDANCE WITH THE TABLE "A" AND, WHERE A CHOICE EXISTS, WILL BE SPECIFIED IN THE CONTRACT OR ORDER.

BEARING: BALL BEARINGS SHALL BE ONE OF THE TYPES IN ACCORDANCE WITH 3.5.1.6. THE SIZES USED FOR THE VARIOUS FRAMES SHALL CONFORM TO THE REQUIREMENTS OF TABLE "B." BEARING TOTAL TEMPERATURE SHALL NOT EXCEED 110° C.

DIMENSIONS: MOTORS SHALL BE SUITABLE FOR FLOOR, BULKHEAD AND CEILING MOUNTING. MOUNTING DIMENSIONS SHALL BE IN ACCORDANCE WITH THE DETAILED REQUIREMENTS TABULATED ON THIS FIGURE.

WEIGHTS: COMPLETE MOTOR WEIGHTS SHALL NOT EXCEED THE MAXIMUM LIMITS LISTED IN TABLE "B."

TEMPERATURE NOT TO EXCEED CLASS B TEMPERATURE LIMITS GIVEN IN TABLE XIII.

TABLE A - BASIC FRAME SIZES FOR ALTERNATING CURRENT DESIGN B AND C CONSTANT SPEED "T" FRAME MOTORS.

Hp	3600 1/		1800		1200		900	
	DPP	TEFC	DPP	TEFC	DPP	TEFC	DPP	TEFC
1	182TN	182TN	182TN	182TN	182TN	182TN	182TN	184TN
1-1/2	182TN	182TN	182TN	182TN	182TN	184TN	184TN	213TN
2	182TN	182TN	182TN	182TN	184TN	213TN	213TN	215TN
3	182TN	184TN	182TN	184TN	213TN	215TN	215TN	254TN
5	182TN	213TN	184TN	213TN	215TN	254TN	254TN	256TN
7-1/2	184TN	215TN	213TN	215TN	254TN	256TN	256TN	256TN
10	213TN	254TN	215TN	254TN	256TN	256TN	286TN	286TN
15	215TN	256TN	254TN	256TN	286TN	286TN	286TN	326TN
20	254TN	286TN	256TN	286TN	286TN	326TN	326TN	326TN
25	256TN	286TN	286TN	286TN	326TN	326TN	326TN	365TN
30	286TN	326TN	286TN	326TN	326TN	365TN	365TN	365TN
40	286TN	326TN	326TN	326TN	365TN	365TN	365TN	405TN
50	326TN	365TN	326TN	365TN	365TN	405TN	405TN	405TN
60	326TN	365TN	365TN	365TN	405TN	405TN	405TN	445TN
75	365TN	405TN	365TN	405TN	405TN	445TN	445TN	445TN
100	365TN	445TN	405TN	445TN	445TN	445TN	445TN	----
125	405TN	445TN	405TN	445TN	445TN	445TN	----	----
150	445TN	445TN	445TN	445TN	----	----	----	----
200	445TN	-----	445TN	----	----	----	----	----
250	445TN	-----	----	----	----	----	----	----

1/

NOTES: 1. DPP - DRIPPROOF - PROTECTED.
2. TEFC - TOTALLY ENCLOSED, FAN COOLED.
3. SPRAYTIGHT FAN COOLED, WATERTIGHT FAN COOLED AND EXPLOSION PROOF FAN COOLED HAVE SAME FRAME ASSIGNMENTS AS TOTALLY ENCLOSED FAN COOLED.
4. SHORT SHAFT EXTENSIONS (TNS) MAY BE FURNISHED FOR COUPLED SERVICE AS SHOWN IN TABLE B.
5. FRAME SIZE MAY BE INCREASED BY ONE (1) FRAME SIZE FOR TWO-POLE MOTORS WHERE A NON-MAGNETIC ONE-PIECE SHAFT IS REQUIRED.

SH11144

TOLERANCES

D DIMENSIONS	
FRAMES 182TNC - 326TNC	+0", -1/32"
FRAMES 365TNC - 445TNC	+0", -1/16
"2E" DIMENSION	+1/64", -1/64
"2F" DIMENSION	+1/64", -1/64
U DIMENSION	
SHAFT DIAMETERS 1"-1-1/2" INC.	+0.0000", -0.0005"
SHAFT DIAMETERS 1-5/8"-2-7/8" INC.	+0.000", -0.001"
KEYWAYS WIDTH	+0.002", -0.000"

KEYWAYS DEPTH

SHAFT DIAMETER	KEY DIMENSION	BOTTOM OF KEYSEAT TO OPPOSITE SIDE OF SHAFT
1-1/8"	1/4" X 1/4"	0.986"-0.971"
1-1/4"	1/4" X 1/4"	1.112"-1.097"
1-3/8"	5/16" X 5/16"	1.201"-1.186"
1-5/8"	3/8" X 3/8"	1.416"-1.401"
1-7/8"	1/2" X 1/2"	1.591"-1.576
2-1/8"	1/2" X 1/2"	1.845"-1.830"
2-3/8"	5/8" X 5/8"	2.021"-2.006"
2-7/8"	3/4" X 3/4"	2.450"-2.435"
3-3/8"	7/8" X 7/8"	2.880"-2.865"

THE SHAFT RUNOUT SHALL BE AS FOLLOWS:

FRAME SIZE	SHAFT RUNOUT (TIR)
182TNC-286TNSC	0.002 INCH MAX.
326TNC-445TNSC	0.003 INCH MAX.

AK DIMENSION	
10.5" AND SMALLER	+0.000" -0.002"
12.5" AND LARGER	+0.000", -0.003"

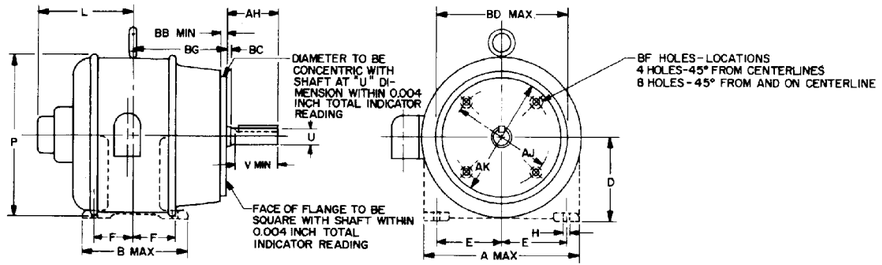

TYPE C - FACE-MOUNTED INTEGRAL-HORSEPOWER MOTOR FRAME

NOTE: FOR VERTICAL MOTORS WITHOUT FEET ALL THE DIMENSIONS OF TABLE B APPLY EXCEPT A, B, H, E, F, AND D.

TABLE B - STANDARD MTG. DIMENSIONS, BEARING SIZES, AND WEIGHTS FOR TYPE C FLANGE MOUNTED HORIZONTAL AND VERTICAL ALTERNATING CURRENT "T" FRAME MOTORS.

FRAME NUMBER	A MAX.	B MAX.	H	E	F	D	P MAX. 1/	U	V MIN.	AH	AJ	AK	BB	BC	BD MAX. 1/	BG	BF HOLE NO.	BF HOLE TAP SIZE	BF HOLE MIN. DEPTH	KEY WAY NOMINAL WIDTH	KEY WAY NOMINAL DEPTH	L (MAX) D.P.	L (MAX) T.E., WT. SPT. & EXP.	MAX. WT. (LBS) D.P.	MAX. WT. (LBS) T.E., WT., SPT. & EXP.	FRONT END BEARING MIN	DRIVE END BEARING MIN	FRAME NUMBER
182TNC	9	6-1/2	17/32	3-3/4	2-1/4	4-1/2	9	1-1/8	2-1/2	2-5/8	7-1/4	8-1/2	1/4	-1/8	9	5-7/8	4	1/2-13	3/4	1/4	1/8	6-1/4	9	75	95	205	206	182TNC
184TNC	9	7-1/2	17/32	3-3/4	2-3/4	4-1/2	9	1-1/8	2-1/2	2-5/8	7-1/4	8-1/2	1/4	-1/8	9	6-3/8	4	1/2-13	3/4	1/4	1/8	6-3/4	9-1/2	90	120	205	206	184TNC
213TNC	10-1/2	7-1/2	21/32	4-1/4	2-3/4	5-1/4	10-1/2	1-3/8	3-1/8	3-1/8	7-1/4	8-1/2	1/4	-1/4	9	7-1/4	4	5/8-11	3/4	5/16	5/32	7-1/4	10-1/4	130	155	206	207	213TNC
215TNC	10-1/2	9	21/32	4-1/4	3-1/2	5-1/4	10-1/2	1-3/8	3-1/8	3-1/8	7-1/4	8-1/2	1/4	-1/4	9	8	4	5/8-11	3/4	5/16	5/32	7-3/4	11	150	185	206	207	215TNC
254TNC	12-1/2	10-3/4	25/32	5	4-1/8	6-1/4	12-1/2	1-5/8	3-3/4	3-3/4	7-1/4	8-1/2	1/4	-1/4	10	9-1/8	4	3/4-10	3/4	3/8	3/16	9-1/4	13	230	275	207	209	254TNC
256TNC	12-1/2	12-1/2	25/32	5	5	6-1/4	12-1/2	1-5/8	3-3/4	3-3/4	7-1/4	8-1/2	1/4	-1/4	10	10	4	3/4-10	3/4	3/8	3/16	10	14	280	335	207	209	256TNC
286TNC	14	14	25/32	5-1/2	5-1/2	7	14	1-7/8	4-3/8	4-3/8	9	10-1/2	1/4	-1/4	13	10-1/2	4	3/4-10	1	1/2	1/4	12-1/4	15-1/2	405	475	207	309	286TNC
286TNSC	14	14	25/32	5-1/2	5-1/2	7	14	1-5/8	3	3	9	10-1/2	1/4	-1/4	13	10-1/2	4	3/4-10	1	3/8	3/16	12-1/4	15-1/2	405	475	207	209	286TNSC
326TNC	16	15-1/2	15/16	6-1/4	6	8	16	2-1/8	5	5	9	10-1/2	1/4	-1/4	13-1/4	11-1/2	4	7/8-9	1	1/2	1/4	13-1/4	17	570	670	309	311	326TNC
326TNSC	16	15-1/2	15/16	6-1/4	6	8	16	1-7/8	3-1/2	3-1/2	9	10-1/2	1/4	-1/4	13-1/4	11-1/2	4	7/8-9	1	1/2	1/4	13-1/4	17	570	670	309	309	326TNSC
365TNC	18	16-1/4	1-1/16	7	6-1/8	9	18	2-3/8	5-5/8	5-5/8	14	16	1/4	-1/4	18	12-1/4	8	3/4-10	1	5/8	5/16	14-3/4	18	705	1075	310	313	365TNC
365TNSC	18	16-1/4	1-1/16	7	6-1/8	9	18	1-7/8	3-1/2	3-1/2	14	16	1/4	-1/4	18	12-1/4	8	3/4-10	1	1/2	1/4	14-3/4	18	705	1075	310	310	365TNSC
405TNC	20	17-3/4	1-1/16	8	6-7/8	10	20	2-7/8	7	7	14	16	1/4	-1/4	18	13-3/4	8	3/4-10	1	3/4	3/8	16-1/2	19-1/4	1025	1275	312	315	405TNC
405TNSC	20	17-3/4	1-1/16	8	6-7/8	10	20	2-1/8	4	4	14	16	1/4	-1/4	18	13-3/4	8	3/4-10	1	1/2	1/4	16-1/2	19-1/4	1025	1275	312	312	405TNSC
445TNC	22	20-1/2	1-3/16	9	8-1/4	11	22	3-3/8	8-1/4	8-1/4	16	18	1/4	-1/4	20	16	8	7/8-9	1	7/16	7/16	18-1/2	21-1/2	1425	1950	313	317	445TNC
445TNSC	22	20-1/2	1-3/16	9	8-1/4	11	22	2-3/8	4-1/2	4-1/2	16	18	1/4	-1/4	20	16	8	7/8-9	1	5/8	5/16	18-1/2	21-1/2	1425	1950	313	313	445TNSC

1/ THIS DIMENSION SHALL NOT CAUSE INTERFERENCE IN THE PLANE OF THE FEET.

FIGURE 2.- STANDARDS FOR INTEGRAL HORSE POWER ALTERNATING CURRENT TYPE C FLANGE MOUNTED HORIZONTAL AND VERTICAL "T" FRAME MOTORS.

Licensed by Information Handling Services

ALTERNATING-CURRENT "T" FRAME MOTORS SHALL BE IN ACCORDANCE WITH THE REQUIREMENTS OF THIS SPECIFICATION AND SHALL CONFORM TO THE FOLLOWING REQUIREMENTS:

SERVICE	"A"
AMBIENT TEMPERATURE	50°C
DUTY	CONTINUOUS
SPEED CLASS	CONSTANT
NUMBER OF PHASES	THREE
FREQUENCY	60 HERTZ
VOLTAGE	440 VOLTS
CLASSIFICATION	SQUIRREL CAGE INDUCTION
DESIGN	B AND C
BEARINGS	BALL (SEE SECTION HEADED "BEARING")
MOUNTING	HORIZONTAL OR VERTICAL
INSULATION	CLASS B, F, H, OR N

SIZES, HORSEPOWER, SPEED, FRAME AND DEGREE OF ENCLOSURE SHALL BE IN ACCORDANCE WITH THE TABLE "A" AND, WHERE A CHOICE EXISTS, WILL BE SPECIFIED IN THE CONTRACT OR ORDER.

BEARING: BALL BEARING SHALL BE ONE OF THE TYPES IN ACCORDANCE WITH PARAGRAPH 3.5.1.6. THE SIZES USED FOR THE VARIOUS FRAMES SHALL CONFORM TO THE REQUIREMENTS OF TABLE "B". BEARING TOTAL TEMPERATURE SHALL NOT EXCEED 110°C.

DIMENSIONS: MOTORS SHALL BE SUITABLE FOR FLOOR, BULKHEAD AND CEILING MOUNTING. MOUNTING DIMENSIONS SHALL BE IN ACCORDANCE WITH THE DETAILED REQUIREMENTS TABULATED ON THIS FIGURE.

WEIGHTS: COMPLETE MOTOR WEIGHTS SHALL NOT EXCEED THE MAXIMUM LIMITS LISTED IN TABLE "B."

TEMPERATURE NOT TO EXCEED CLASS B TEMPERATURE LIMITS GIVEN IN TABLE XIII.

TABLE A - BASIC FRAME SIZES FOR ALTERNATING CURRENT DESIGN B AND C CONSTANT SPEED "T" FRAME MOTORS.

Hp	1/ 3600		1800		1200		900	
	DPP	TEFC	DPP	TEFC	DPP	TEFC	DPP	TEFC
1	182TN	182TN	182TN	182TN	182TN	182TN	182TN	184TN
1-1/2	182TN	182TN	182TN	182TN	182TN	184TN	184TN	213TN
2	182TN	182TN	182TN	182TN	184TN	213TN	213TN	215TN
3	182TN	184TN	182TN	184TN	213TN	215TN	215TN	254TN
5	182TN	213TN	184TN	213TN	215TN	254TN	254TN	256TN
7-1/2	184TN	215TN	213TN	215TN	254TN	256TN	256TN	256TN
10	213TN	254TN	215TN	254TN	256TN	256TN	286TN	286TN
15	215TN	256TN	254TN	256TN	286TN	286TN	286TN	326TN
20	254TN	286TN	256TN	286TN	286TN	326TN	326TN	326TN
25	256TN	286TN	286TN	286TN	326TN	326TN	326TN	365TN
30	286TN	326TN	286TN	326TN	326TN	365TN	365TN	365TN
40	286TN	326TN	326TN	326TN	365TN	365TN	365TN	405TN
50	326TN	365TN	326TN	365TN	365TN	405TN	405TN	405TN
60	326TN	365TN	365TN	365TN	405TN	405TN	405TN	445TN
75	365TN	405TN	365TN	405TN	405TN	445TN	445TN	445TN
100	365TN	445TN	405TN	445TN	445TN	445TN	445TN	-----
125	405TN	445TN	405TN	445TN	445TN	445TN	----	----
150	445TN	445TN	445TN	445TN	-----	----	----	----
200	445TN	-----	445TN	----	-----	----	-----	----
250	445TN	-----	-----	-----	-----	-----	-----	-----

1/

NOTES: 1. DPP-DRIPPROOF-PROTECTED.
2. TEFC-TOTALLY ENCLOSED. FAN COOLED.
3. SPRAYTIGHT FAN COOLED, WATERTIGHT FAN COOLED AND EXPLOSION PROOF FAN COOLED HAVE SAME FRAME ASSIGNMENTS AS TOTALLY ENCLOSED FAN COOLED.
4. SHORT SHAFT EXTENSIONS (TNS) MAY BE FURNISHED FOR COUPLED SERVICE AS SHOWN TABLE B.
5. FRAME SIZE MAY BE INCREASED BY ONE (1) FRAME SIZE FOR TWO-POLE MOTORS WHERE A NON-MAGNETIC ONE-PIECE SHAFT IS REQUIRED.

SH 11148

TOLERANCES

D DIMENSIONS	
FRAMES 182TND-326TND	+0", -1/32"
FRAMES 365TND-445TND	+0", -1/16"
"2E" DIMENSION	+1/64", -1/64"
"2F" DIMENSION	+1/64", -1/64"
U DIMENSION	
SHAFT DIAMETERS 1"-1-1/2" INC.	+0.0000", -0.0002"
SHAFT DIAMETERS 1-5/8"-2-7/8" INC.	+0.000", -0.001"
KEYWAYS WIDTH	+0.002", -0.000"
KEYWAYS DEPTH	

SHAFT DIAMETER	KEY DIMENSION	BOTTOM OF KEYSEAT TO OPPOSITE SIDE OF SHAFT
1-1/8"	1/4" X 1/4"	0.986"-0.971"
1-1/4"	1/4" X 1/4"	1.112"-1.097"
1-3/8"	5/16" X 5/16"	1.201"-1.186"
1-5/8"	3/8" X 3/8"	1.416"-1.401"
1-7/8"	1/2" X 1/2"	1.591"-1.576
2-1/8"	1/2" X 1/2"	1.845"-1.830"
2-3/8"	5/8" X 5/8"	2.021"-2.006"
2-7/8"	3/4" X 3/4"	2.450"-2.435"
3-3/8"	7/8" X 7/8"	2.880"-2.865"

THE SHAFT RUNOUT SHALL NOT EXCEED THE FOLLOWING

FRAME SIZE	SHAFT RUNOUT (TIR)
182TN-286TNSD	0.002 INCH MAX.
324TND-445TNSD	0.003 INCH MAX.

AK DIMENSION

11" AND SMALLER +0.000", -0.002"
14" AND LARGER +0.000", -0.003"

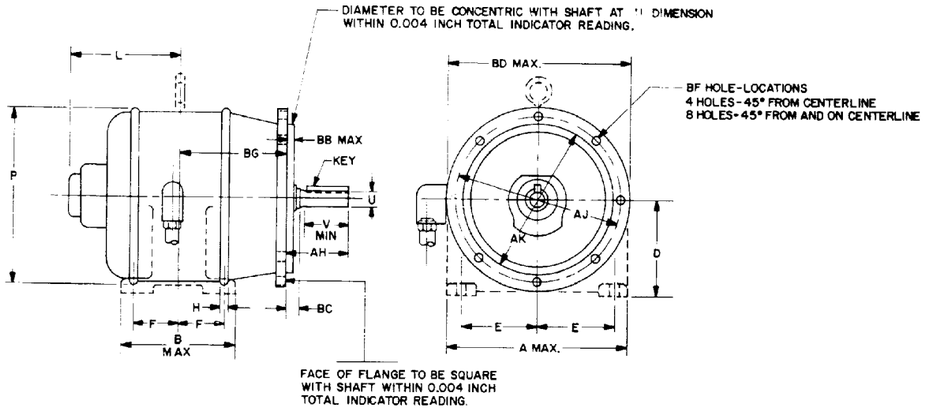

TYPE D - FACE - MOUNTED INTEGRAL - HORSEPOWER MOTOR FRAMES

TABLE B - STANDARD MTG. DIMENSIONS, BEARING SIZES, AND WEIGHTS FOR TYPE D FLANGE MOUNTED HORIZONTAL AND VERTICAL ALTERNATING CURRENT "T" FRAME MOTORS.

FRAME NUMBER	A (MAXIMUM)	B (MAXIMUM)	H	E	F	D	P (MAX.) ⋁	U	V (MIN.)	AH	AJ	AK	BB (MAX)	BC	BD (MAX)	BG	BF HOLE NUMBER	BF HOLE SIZE	KEYWAY NOMINAL WIDTH	KEYWAY NOMINAL DEPTH	L (MAX) DP	L (MAX) TE, WT, SPT & EXP.	MAX. WT. (LBS) DP	MAX. WT. (LBS) TE, WT, SPT & EXP.	FRONT END BEARING (MIN.)	DRIVE END BEARING (MIN.)	FRAME NUMBER
182TND	9	6-1/2	17/32	3-3/4	2-1/4	4-1/2	9	1-1/8	2	2-3/4	10	9	1/4	0	11	5-3/4	4	17/32	1/4	1/8	6-1/4	9	75	95	205	206	182TND
184TND	9	7-1/2	17/32	3-3/4	2-3/4	4-1/2	9	1-1/8	2	2-3/4	10	9	1/4	0	11	6-1/4	4	17/32	1/4	1/8	6-3/4	9-1/2	90	120	205	206	184TND
213TND	10-1/2	7-1/2	21/32	4-1/4	2-3/4	5-1/4	10-1/2	1-3/8	2-3/4	3-3/8	10	9	1/4	0	11	7	4	21/32	5/16	5/32	7-1/4	10-1/4	130	155	206	207	213TND
215TND	10-1/2	9	21/32	4-1/4	3-1/2	5-1/4	10-1/2	1-3/8	2-3/4	3-3/8	10	9	1/4	0	11	7-3/4	4	21/32	5/16	5/32	7-3/4	11	150	185	206	207	215TND
254TND	12-1/2	10-3/4	25/32	5	4-1/8	6-1/4	12-1/2	1-5/8	3-1/2	4	12-1/2	11	1/4	0	14	8-7/8	4	25/32	3/8	3/16	9-1/4	13	230	275	207	209	254TND
256TND	12-1/2	12-1/2	25/32	5	5	6-1/4	12-1/2	1-5/8	3-1/2	4	12-1/2	11	1/4	0	14	9-3/4	4	25/32	5/16	5/32	10	14	280	335	207	209	256TND
286TND	14	14	25/32	5-1/2	5-1/2	7	14	1-7/8	4-5/8	4-5/8	12-1/2	11	1/4	0	14	10-1/4	4	25/32	1/2	1/4	12-1/4	15-1/2	405	475	207	309	286TND
286TNSD	14	14	25/32	5-1/2	5-1/2	7	14	1-5/8	2-1/2	3-1/4	12-1/2	11	1/4	0	14	10-1/4	4	25/32	3/8	3/16	12-1/4	15-1/2	405	475	207	209	286TNSD
326TND	16	15-1/2	15/16	6-1/4	6	8	16	2-1/8	5-3/8	5-1/4	16	14	1/4	0	18	11-1/4	4	15/16	1/2	1/4	13-1/4	17	570	670	309	311	326TND
326TNSD	16	15-1/2	15/16	6-1/4	6	8	16	1-7/8	3	3-3/4	16	14	1/4	0	18	11-1/4	4	15/16	1/2	1/4	13-1/4	17	570	670	309	309	326TNSD
365TND	18	16-1/4	1-1/16	7	6-1/8	9	18	2-3/8	6-1/8	5-7/8	18	16	1/4	0	20	12	8	25/32	5/8	5/16	14-3/4	18	705	1075	310	313	365TND
365TNSD	18	16-1/4	1-1/16	7	6-1/8	9	18	1-7/8	3-1/2	3-3/4	18	16	1/4	0	20	12	8	25/32	1/2	1/4	14-3/4	18	705	1075	310	310	365TNSD
405TND	20	17-3/4	1-1/16	8	6-7/8	10	20	2-7/8	6-7/8	7-1/4	20	18	1/4	0	22	13-1/2	8	25/32	3/4	3/8	16-1/2	19-1/4	1025	1275	312	315	405TND
405TNSD	20	17-3/4	1-1/16	8	6-7/8	10	20	2-1/8	4	4-1/4	20	18	1/4	0	22	13-1/2	8	25/32	1/2	1/4	16-1/2	19-1/4	1025	1275	312	312	405TNSD
445TND	22	20-1/2	1-3/16	9	8-1/4	11	22	3-3/8	8-3/8	8-1/2	20	18	1/4	0	22	15-3/4	8	15/16	7/8	7/16	18-1/2	21-1/2	1425	1950	313	317	445TND
445TNSD	22	20-1/2	1-3/16	9	8-1/4	11	22	2-3/8	4	4-3/4	[illegible]	18	1/4	0	22	15-3/4	8	15/16	5/8	5/16	18-1/2	21-1/2	1425	1950	313	313	445TNSD

⋁ THIS DIMENSION SHALL NOT CAUSE INTERFERENCE IN THE PLANE OF THE FEET.

FIGURE 3.-STANDARDS FOR INTEGRAL HORSEPOWER ALTERNATING CURRENT TYPE D FLANGE MOUNTED HORIZONTAL AND VERTICAL "T" FRAME MOTORS.

Licensed by Information Handling Services

ALTERNATING-CURRENT "T" FRAME MOTORS SHALL BE IN ACCORDANCE WITH THE REQUIREMENTS OF THIS SPECIFICATION AND SHALL CONFORM TO THE FOLLOWING REQUIREMENTS:

SERVICE	"A"
AMBIENT TEMPERATURE	50° C
DUTY	CONTINUOUS
SPEED CLASS	CONSTANT
NUMBER OF PHASES	THREE
FREQUENCY	60 HERTZ
VOLTAGE	440 VOLTS
CLASSIFICATION	SQUIRREL CAGE INDUCTION
DESIGN	B AND C
BEARINGS	BALL (SEE SECTION HEADED "BEARING")
MOUNTING	VERTICAL
INSULATION	CLASS B,F,H OR N

SIZES, HORSEPOWER, SPEED, FRAME AND DEGREE OF ENCLOSURE SHALL BE IN ACCORDANCE WITH THE THE TABLE "A" AND, WHERE A CHOICE EXISTS, WILL BE SPECIFIED IN THE CONTRACT OR ORDER.

BEARING: BALL BEARINGS SHALL BE ONE OF THE TYPES IN ACCORDANCE WITH PARAGRAPH 3.5.1.6. THE SIZES USED FOR THE VARIOUS FRAMES SHALL CONFORM TO THE REQUIREMENTS OF TABLE "B". BEARING TOTAL TEMPERATURE SHALL NOT EXCEED 110° C.

DIMENSIONS: MOTORS SHALL BE SUITABLE FOR FLOOR, BULKHEAD AND CEILING MOUNTING, MOUNTING DIMENSIONS SHALL BE IN ACCORDANCE WITH THE DETAILED REQUIREMENTS TABULATED ON THIS FIGURE.

WEIGHTS: COMPLETE MOTOR WEIGHTS SHALL NOT EXCEED THE MAXIMUM LIMITS LISTED IN TABLE "B".

TEMPERATURE NOT TO EXCEED CLASS B TEMPERATURE LIMITS GIVEN IN TABLE XIII.

TABLE A-BASIC FRAME SIZES FOR ALTERNATING CURRENT DESIGN B AND C CONSTANT SPEED "T" FRAME MOTORS.

Hp	1/ 3600		1800		1200		900	
	DPP	TEFC	DPP	TEFC	DPP	TEFC	DPP	TEFC
1	182TN	182TN	182TN	182TN	182TN	182TN	182TN	184TN
1-1/2	182TN	182TN	182TN	182TN	182TN	184TN	184TN	213TN
2	182TN	182TN	182TN	182TN	184TN	213TN	213TN	215TN
3	182TN	184TN	182TN	184TN	213TN	215TN	215TN	254TN
5	182TN	213TN	184TN	213TN	215TN	254TN	254TN	256TN
7-1/2	184TN	215TN	213TN	215TN	254TN	256TN	256TN	256TN
10	213TN	254TN	215TN	254TN	256TN	256TN	286TN	286TN
15	215TN	256TN	254TN	256TN	286TN	286TN	286TN	326TN
20	254TN	286TN	256TN	286TN	286TN	326TN	326TN	326TN
25	256TN	286TN	286TN	286TN	326TN	326TN	326TN	365TN
30	286TN	326TN	286TN	326TN	326TN	365TN	365TN	365TN
40	286TN	326TN	326TN	326TN	365TN	365TN	365TN	405TN
50	326TN	365TN	326TN	365TN	365TN	405TN	405TN	405TN
60	326TN	365TN	365TN	365TN	405TN	405TN	405TN	445TN
75	365TN	405TN	365TN	405TN	405TN	445TN	445TN	445TN
100	365TN	445TN	405TN	445TN	445TN	445TN	445TN	-----
125	405TN	445TN	405TN	445TN	445TN	445TN	----	----
150	445TN	445TN	445TN	445TN	----	-----	-----	----
200	445TN	-----	445TN	-----	----	-----	-----	----
250	445TN	-----	-----	----	----	-----	-----	-----

1/

NOTES: 1. DPP-DRIPPROOF-PROTECTED.
2. TEFC-TOTALLY ENCLOSED. FAN COOLED.
3. SPRAYTIGHT FAN COOLED, WATERTIGHT FAN COOLED AND EXPLOSION PROOF FAN COOLED HAVE SAME FRAME ASSIGNMENTS AS TOTALLY ENCLOSED FAN COOLED.
4. SHORT SHAFT EXTENSIONS (TNS) MAY BE FURNISHED FOR COUPLED SERVICE AS SHOWN IN TABLE B.
5. FRAME SIZE MAY BE INCREASED BY ONE (1) FRAME SIZE FOR TWO-POLE MOTORS WHERE A NON-MAGNETIC ONE-PIECE SHAFT IS REQUIRED.

SH 11146

TOLERANCES

U DIMENSION
SHAFT DIAMETERS 1"-1-1/2" INC. ------ +0.0000", -0.0006"
SHAFT DIAMETERS 1-5/8"-2-2-7/8" INC.--- +0.000", -0.001"

KEYWAYS
WIDTH +0.002", -0.000"

KEYWAYS
DEPTH

SHAFT DIAMETER	KEY DIMENSION	BOTTOM OF KEYSEAT TO OPPOSITE SIDE OF SHAFT
1-1/8"	1/4" X 1/4"	0.986"-0.971"
1-1/4"	1/4" X 1/4"	1.112"-1.097"
1-3/8"	5/16" X 5/16"	1.201"-1.186"
1-5/8"	3/8" X 3/8"	1.416"-1.401"
1-7/8"	1/2" X 1/2"	1.591-1.576"
2-1/8"	1/2" X 1/2"	1.845"-1.830"
2-3/8"	5/8" X 5/8"	2.021"-2.006"
2-7/8"	3/4" X 3/4"	2.450"-2.435"
3-3/8"	7/8" X 7/8"	2.880"-2.865"

THE SHAFT RUNOUT SHALL NOT EXCEED THE FOLLOWING

FRAME SIZE	SHAFT RUNOUT (TIR)
182TNP - 286TNP	0.002 INCH MAX.
326TNP - 445TNP	0.003 INCH MAX.

AK DIMENSION
8-1/4" --------- +0.002", -0.000"
13-1/2" --------- +0.003", -0.000"

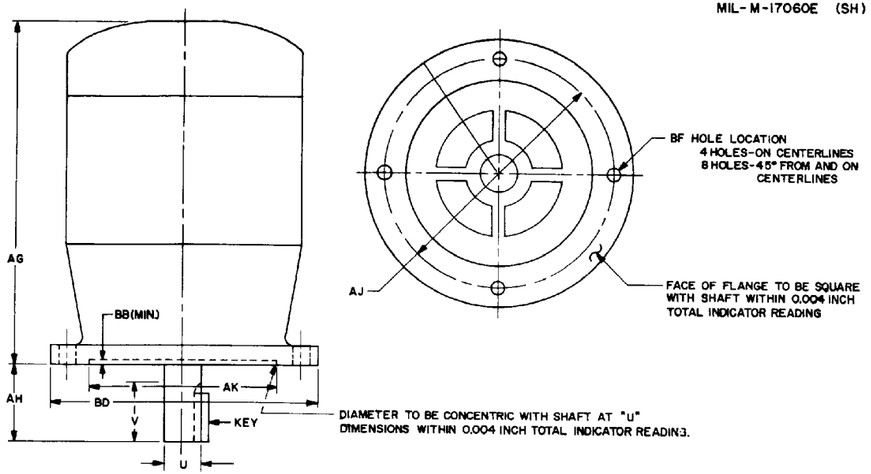

TYPE P-BASE INTEGRAL HORSEPOWER MOTOR FRAME

TABLE B-STANDARD MOUNTING DIMENSIONS, BEARING SIZES, AND WEIGHTS FOR TYPE P BASE DIRECT COUPLED VERTICAL A-C "T" FRAME MOTORS.

FRAME NO.	AH	U	V (MIN)	AK	AJ	BD (MAX.)	BB (MIN.)	BF HOLE		AG (MAXIMUM)		MAXIMUM WEIGHT (POUNDS)		FRONT END BEARING (MIN.)	DRIVE END BEARING (MIN.)	FRAME NO.
								NUMBER	SIZE	DPP	TEFC	DPP	TEFC			
182TNP	2-1/4	1-1/8	2	8-1/4	9-1/8	11	3/16	4	21/32	17-3/8	23-1/4	75	95	205	206	182TNP
184TNP	2-1/4	1-1/8	2	8-1/4	9-1/8	11	3/16	4	21/32	18-3/8	24-1/4	90	120	205	206	184TNP
213TNP	3	1-3/8	2-3/4	8-1/4	9-1/8	11	3/16	4	21/32	20	25-5/8	130	155	206	207	213TNP
215TNP	3	1-3/8	2-3/4	8-1/4	9-1/8	11	3/16	4	21/32	21-1/4	27-1/8	150	185	206	207	215TNP
254TNP	3-3/4	1-5/8	3-1/2	8-1/4	9-1/8	11	3/16	4	25/32	24-1/8	29-1/8	230	275	207	209	254TNP
256TNP	3-3/4	1-5/8	3-1/2	8-1/4	9-1/8	11	3/16	4	25/32	25-3/4	30-3/4	280	335	207	209	256TNP
286TNP	3-3/4	1-7/8	3-1/2	8-1/4	9-1/8	12	3/16	4	25/32	30-1/2	33-1/4	405	475	207	309	286TNP
326TNP	3-3/4	2-1/8	3-1/2	13-1/2	14-3/4	16-1/2	1/4	4	15/16	32-3/4	34-1/2	570	670	309	309	326TNP
365TNP	3-3/4	2-3/8	3-1/2	13-1/2	14-3/4	16-1/2	1/4	8	25/32	35	36-1/4	705	1075	310	310	365TNP
405TNP	4-1/4	2-7/8	4	13-1/2	14-3/4	16-1/2	1/4	8	25/32	36-3/4	38-1/2	1025	1275	312	312	405TNP
445TNP	4-1/4	3-3/8	4	13-1/2	14-3/4	20	1/4	8	15/16	41	43	1425	1950	313	313	445TNP

FIGURE 4-STANDARDS FOR ALTERNATING CURRENT INTEGRAL HORSEPOWER TYPE P BASE DIRECT CONNECTED VERTICAL "T" FRAME MOTORS.

Licensed by Information Handling Services

NOTES:
1. BEARING HOUSING BOTH ENDS:
2.
3.
4.
5.
6.
7.
8.
9.
10.
11.
12.
13.
14.

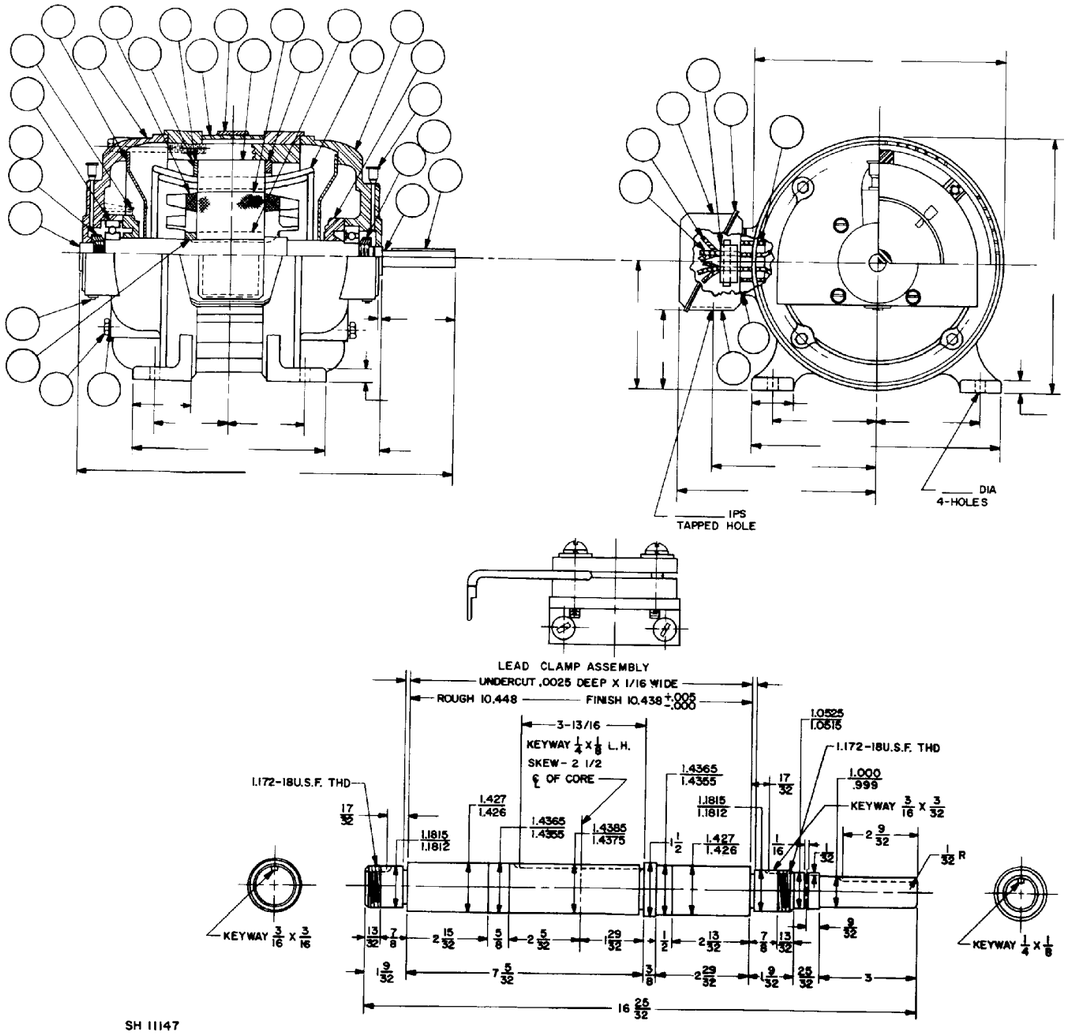

FIGURE 5. SERVICE "A" MOTOR.

ALTERNATING CURRENT MOTORS	
MFRS. TYPE & CLASS	
FRAME SIZE	DUTY
DEGREE OF ENCLOSURE	
SPEED CLASS	R.P.M. F.L.
H.P. VOLTS	CYCLE PHASE
NAME PLATE AMPS *	TYPE OF ROTOR SQUIRREL CAGE
TORQUE CLASS	CURRENT CLASS
INSULATION CLASS	MOUNTING
PERMISSIBLE AMBIENT TEMPERATURE	C° OR LESS
NAVY SERVICE	

NOTE * THIS CALCULATED VALUE OF FULL-LOAD AMPERES CAN BE USED AS A BASIS FOR SELECTING THE DISTRIBUTION SYSTEM COMPONENTS AND OVERLOAD HEATERS OR RELAYS.

Title block		
		SIZE CODE IDENT. NO. DWG NO.
		SCALE WEIGHT SHEET 1 OF 3

Licensed by Information Handling Services

GUARANTEED PERFORMANCE AT RATED VOLTAGE & FREQUENCY		
LOAD	EFFICIENCY	POWER FACTOR

LOCKED ROTOR POWER FACTOR	
LOCKED ROTOR CURRENT	
LOCKED ROTOR TORQUE ____ % OF FLT.	
PULL-UP TORQUE ____ % OF FLT.	
BREAKDOWN TORQUE ____ % OF FLT.	

SPECIFICATIONS AND EXCEPTIONS

THE MOTOR DESCRIBED ON THIS DRAWING IS IN ACCORDANCE WITH SPECIFICATION MIL-M-17060 WITH THE FOLLOWING EXCEPTION: (IF NONE SO STATE.)

STATOR: DIAMETER INSIDE ____ IN., CORE LENGTH ____ IN.
ROTOR DIAMETER OUTSIDE ____ IN., NO. OF BARS ____ BAR MAT'L ____
SIZE OF END RING ____ END RING MAT'L ____

WINDING DATA	STATOR	
NUMBER OF POLES		
TYPE OF CONNECTION		
NUMBER OF SLOTS		
NUMBER OF COILS		
WINDING PITCH IN SLOTS		
TURNS IN SERIES PER COIL		
CONDUCTOR DIAMETER		
CONDUCTOR INSULATION		
CONDUCTOR IN PARALLEL		
RES. BETWEEN TERM. IN OHMS		
WEIGHT OF COPPER ____ LBS		

TREATMENT OF STATOR WINDING

INSULATION	MATERIAL	NAVY SPEC.
SLOT CELL		
SPACER		
TOP WEDGE		
"U" WEDGE		
INS. BETWEEN PHASES		
INS. ON COIL EXT.		
INS. ON COIL LEADS & CONNS		
COMPLETED STATOR		
LEAD WIRE		

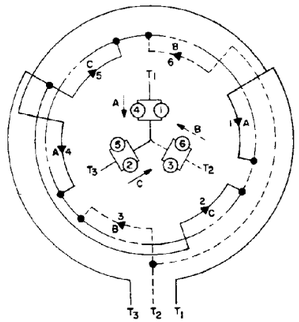

2-POLE, 3-PHASE, 2-PARALLEL STAR CONNECTION DIAGRAM

HIGH SPEED

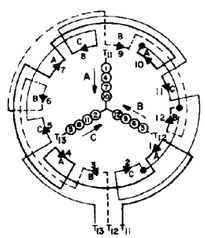

4-POLE, 3-PHASE, SERIES STAR CONNECTION DIAGRAM

LOW SPEED

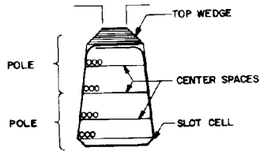

SKETCH OF STATOR SLOT

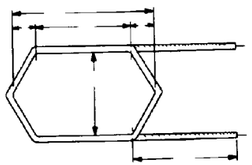

STATOR COIL

TEMPERATURE RISE DATA-DEGREES CENTIGRADE								
LOAD ON TEMPERATURE RUN ____ % LOAD ____ HRS. PLUS ____ % LOAD ____ HRS.								
LENGTH OF TEMPERATURE RUN		HOURS		MINUTES				
TEMPERATURE RISE	AMPS.	SPEEDS	THERMOCOUPLE NUMBERS					
			1	2	3	4	5	6
1 HOUR BEFORE SHUTDOWN		HIGH SPEED						
		LOW SPEED						
FINAL WHILE RUNNING		HIGH SPEED						
		LOW SPEED						
AFTER SHUTDOWN AMBIENT C°		HIGH SPEED						
		LOW SPEED						

LOCATIONS OF NUMBERED THERMOCOUPLES
NO. 1 ____ NO. 2 ____ NO. 3 ____
NO. 4 ____ NO. 5 ____ NO. 6(FRAME) ____

RESISTANCE (OHMS) AND RISE BY RESISTANCE (DEGREES CENTIGRADE)								
	HIGH SPEED			LOW SPEED				
	T1 — T2	T2 — T3	T3 — T1	T11 — T12	T12 — T13	T13 — T11		
COLD AT °C								
HOT								
RISE BY RESISTANCE								
SHOCK TEST REFERENCE								

PERFORMANCE AT RATED VOLTAGE AND FREQUENCY															
	HIGH SPEED								LOW SPEED						
DESIRED LOAD	ACTUAL LOAD %	LB. FT	AMPS.	WATTS	R.P.M.	EFF.	P.F	ACTUAL LOAD %	LB. FT.	AMPS.	WATTS	R.P.M.	EFF.	P.F.
4/4														
3/4														
2/4														
0														

SPEED TORQUE DATA					
	VOLTS	AMPS	WATTS	R.P.M.	LB. FT.
HIGH SPEED					
LOCKED ROTOR		—	—	—	
PULL-UP		—	—	—	
BREAKDOWN		—	—	—	
LOW SPEED					
LOCKED ROTOR		—	—	—	
PULL-UP		—	—	—	
BREAKDOWN		—	—	—	

NOISE TEST	
AIRBORNE NOISE TEST DATA	
OCTAVE BAND CENTERS (HZ)	dB LEVEL RE 20μ PA SOUND PRESSURE
31.5	
63	
125	
250	
500	
1000	
2000	
4000	
8000	

STRUCTUREBORNE NOISE (AdB RE 10^{-5} CM/SEC^2) ↓ OCTAVE BANDCENTER-MEASURED ON FOOT WITH HIGHEST OVERALL AdB LEVEL																														
HZ	10	12½	16	20	25	31½	40	50	63	80	100	125	160	200	250	315	400	500	630	800	1000	1250	1600	2000	2500	3150	4000	5000	6300	8000
RADIAL																														
TANG.																														
AXIAL																														

Title Block

SIZE	CODE IDENT NO.	DWG. NO.
SCALE	WEIGHT	SHEET 2 OF 3

SH 11147

FIGURE 5. SERVICE "A" MOTOR (continued).

Licensed by Information Handling Services

MANUFACTURED FOR THE U. S. NAVY

SPEC. MIL-M-17060

NAV. SYSCOM CONTR. NO.

TYPE FR. CLASS FORM

R.P.M. DUTY H.P. CONT. H.P.

VOLTS AMPS FREQ.

PHASE DUTY

INS. CLASS SER. NO.

DESIGN MFRS. DWG. NO.

F.S.H. AMB°

DATE MFD. INSPECTED

CODE IDENT.

DETAIL OF ITEM-____

BEARING REPLACEMENTS		
BEARINGS OF THE FOLLOWING DESIGNATIONS MAY BE USED		
	BACK END	FRONT END
MIL. STD. CODE NO. OR NATIONAL STOCK NO.		
MANUFACTURER		

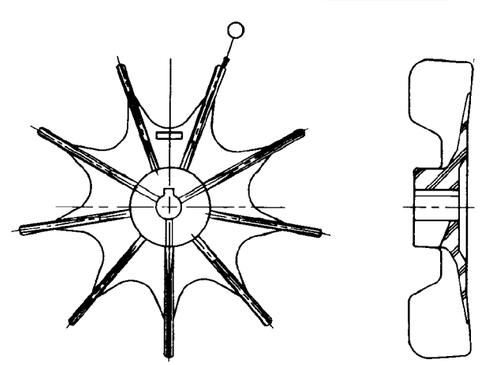

SH 11147

BLADE FAN

PARTS LIST	1. AGENCY (CONTRACTOR IDENTIFICATION)	1A. CONTRACT NO.	2. FSCM NO.	3. PL	4. REVISION LTR DATE
5. LIST TITLE	6. AUTHENTICATION			7. REV. AUTH. NO.	8. SHEET OF SHEETS

9. ITEM OR FIND NUMBER	10. QTY. REQ.	12. CODE IDENT.	13. DRAWING OR DOCUMENT NUMBER	14. PART OR IDENTIFYING NUMBER	15. NOMENCLATURE OR DESCRIPTION

		SIZE / CODE IDENT. NO. / DWG. NO.
		SCALE / WEIGHT / SHEET 3 OF 3

FIGURE 5.- SERVICE "A" MOTOR (continued)

Licensed by Information Handling Services

GUARANTEED PERFORMANCE AT RATED VOLTAGE & FREQUENCY				
LOAD	EFFICIENCY		POWER FACTOR	
	HIGH SPEED	LOW SPEED	HIGH SPEED	LOW SPEED
FULL				
3/4				
1/2				
LOCKED ROTOR POWER FACTOR				
LOCKED ROTOR CURRENT				
LOCKED ROTOR TORQUE ____ % OF FLT.				
PULL-UP TORQUE ____ % OF FLT.				
BREAKDOWN TORQUE ____ % OF FLT.				

SPECIFICATIONS AND EXCEPTIONS

THE MOTOR DESCRIBED ON THIS DRAWING IS IN ACCORDANCE WITH SPECIFICATION MIL-M-17060 WITH THE FOLLOWING EXCEPTION

STATOR: DIAMETER INSIDE ____ IN., CORE LENGTH ____ IN.
ROTOR: DIAMETER OUTSIDE ____ IN., NO. OF BARS ____ BAR MAT'L ____
SIZE OF END RING ____ END RING MAT'L ____

WINDING DATA STATOR		
NUMBER OF POLES		
TYPE OF CONNECTION		
NUMBER OF SLOTS		
NUMBER OF COILS		
WINDING PITCH IN SLOTS		
TURNS IN SERIES PER COIL		
CONDUCTOR DIAMETER (BARE)	IN. AWG	IN. AWG
CONDUCTOR INSULATION	J-W-001177	
CONDUCTOR IN PARALLEL		
RES. BETWEEN TERM. IN OHMS	@25°C	@ 25°C
WEIGHT OF COPPER ____ LBS		

STATOR SLOT DETAIL

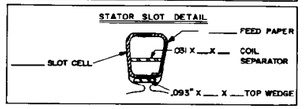

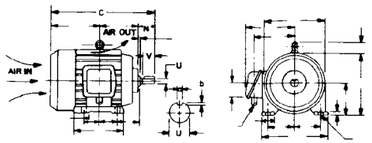

GROUP	C	N	U	V	a	b
I						
II						
III						

CONNECTIONS	
POLE CONNECTIONS	CIRCUIT
LEADS T1	
LEADS T2	
LEADS T3	
NEUTRAL	

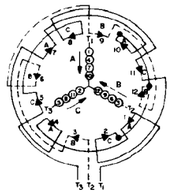

4-POLE, 3-PHASE, SERIES STAR CONNECTION DIAGRAM

NOISE TEST	
AIRBORNE NOISE TEST DATA	
OCTAVE BAND CENTERS (HZ)	dB LEVEL RE 20μ PA SOUND PRESSURE
31.5	
63	
125	
250	
500	
1000	
2000	
4000	
8000	

REVISIONS		
ZONE	REV.	DESCRIPTION
	A	ORIGINAL SUBMISSION

TEMPERATURE RISE DATA—DEGREES CENTIGRADE

LOAD ON TEMPERATURE RUN ____ % LOAD ____ HRS. PLUS ____ % LOAD ____ HRS.
LENGTH OF TEMPERATURE RUN HOURS ____ MINUTES ____

TEMPERATURE RISE	AMPS.	SPEEDS	THERMOCOUPLE NUMBERS 1	2	3	4	5	6
1 HOUR BEFORE SHUTDOWN		HIGH SPEED						
		LOW SPEED						
FINAL WHILE RUNNING		HIGH SPEED						
		LOW SPEED						
AFTER SHUTDOWN		HIGH SPEED						
AMBIENT	C°	LOW SPEED						

LOCATIONS OF NUMBERED THERMOCOUPLES
NO. 1 ____ NO. 2 ____ NO. 3 ____
NO. 4 ____ NO. 5 ____ NO. 6 (FRAME) ____

RESISTANCE (OHMS) AND RISE BY RESISTANCE (DEGREES CENTIGRADE)

	HIGH SPEED T1—T2	T2—T3	T3—T1	LOW SPEED T1H—T2H	T2H—T3H	T3H—T1H
COLD AT °C						
HOT						
RISE BY RESISTANCE						

SHOCK TEST REFERENCE
SEE SHOCK TEST REPORT
NO. ____ DATED ____
LTR. FILE ____
DATE ____ INSMAT ____
FORWARDING REPORT TO BUREAU CONCERNED ____

PARTS LIST				
1. AGENCY (CONTRACTOR IDENTIFICATION)	1A. CONTRACT NO.	2. FROM NO.	3. PL	4. REVISION LTR. DATE
5. LIST TITLE	6. AUTHENTICATION	7. REV. AUTH. NO.	8. SHEET OF SHEETS	

9. ITEM OR FIND NUMBER	10. QTY. REQ.	11. CODE IDENT.	13. DRAWING OR DOCUMENT NUMBER	14. PART OR IDENTIFYING NUMBER	15. NOMENCLATURE OR DESCRIPTION

STATOR SLOT DETAIL

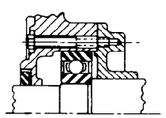

FREE END BEARING
FRONT END

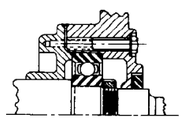

FIXED END BEARING
DRIVE END

STRUCTUREBORNE NOISE (A4B RE 10^{-3} CM/SEC^2) 1/3 OCTAVE BANDCENTER-MEASURED ON FOOT WITH HIGHEST OVERALL A4B LEVEL																															
HZ	10	12½	16	20	25	31½	40	50	63	80	100	125	160	200	250	315	400	500	630	800	1000	1250	1600	2000	2500	3150	4000	5000	6300	8000
RADIAL																														
TANG.																														
AXIAL																														

PERFORMANCE AT RATED VOLTAGE AND FREQUENCY

DESIRED LOAD	ACTUAL LOAD %	HIGH SPEED LB. FT.	AMPS.	WATTS	R.P.M.	EFF.	P.F.	ACTUAL LOAD %	LOW SPEED LB. FT.	AMPS.	WATTS	R.P.M.	EFF.	P.F.
4/4														
3/4														
2/4														
1/4														
0	0													

SPEED TORQUE DATA	VOLTS	AMPS	WATTS	R.P.M.	LB. FT.
HIGH SPEED					
LOCKED ROTOR					
PULL-UP					
BREAKDOWN					
LOW SPEED					
LOCKED ROTOR					
PULL-UP					
BREAKDOWN					

BEARING CONSTRUCTION	
BEARINGS	
MOUNTING	
LUBRICANT	
BEARING REMOVAL TOOL	
BEARING REPLACEMENT	
F.E. BRG. HOUSING DIA	
B. E. BRG. HOUSING DIA.	
BEARING O. D.	

MOTOR DESIGN DETAILS AND NOTES

ITEM	DESCRIPTION
METHOD OF ATTACHING FAN TO SHAFT	CLAMPING BOLTS AND KEY
METHOD OF RETAINING CORE	PRESS FIT (.001 TO .007) PLUS DOWEL 5 TO 7 TON PRESSURE REQUIRED
METHOD OF ASSEMBLING SHAFT AND ROTOR	PRESS FIT (.0005 TO .0015) 7 TO 20 TON PRESSURE REQUIRED
ROTOR WEIGHT	170 LBS.
SHAFT AXIAL MOVEMENT	.015 MAX.
SERIAL NUMBER	STAMPED IN METAL FRAME UNDERNEATH (COVERED BY) NAMEPLATE
MOTOR WEIGHT	750 LBS. (CALCULATED)

MOTOR CONSTRUCTION	DESIGN MANUAL	CROSS REFERENCE

(THIS SPACE TO BE USED TO CROSS REFERENCE THIS SPECIFIC MOTOR CONSTRUCTION WITH THE MFGR'S BUSHIPS APPROVED DESIGN MANUAL).

APPROVALS	
ITEM	APPROVED PER
IDENTIFICATION PLATE	
INSULATION SYSTEM	
SHOCK TEST	
DESIGN MANUAL	

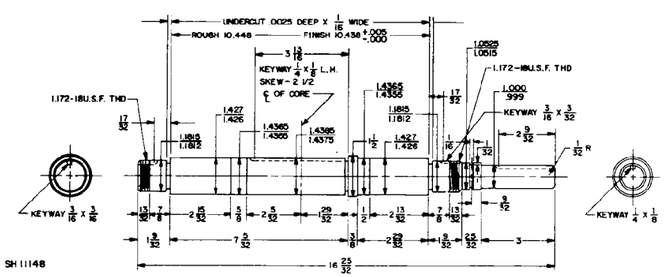

MOTOR CONSTRUCTION	DESIGN MANUAL	CROSS REFERENCE

(THIS SPACE TO BE USED TO CROSS REFERENCE THIS SPECIFIC MOTOR CONSTRUCTION WITH THE MFGR'S. BUSHIPS APPROVED DESIGN MANUAL).

APPROVALS	
ITEM	APPROVED PER
IDENTIFICATION PLATE	
INSULATION SYSTEM	
SHOCK TEST	
DESIGN MANUAL	

ALTERNATING CURRENT MOTORS
MFRS. TYPE & CLASS ____
FRAME SIZE ____ DUTY ____
DEGREE OF ENCLOSURE ____
SPEED CLASS ____ R.P.M. ____ F.L. ____
H.P. ____ VOLTS ____ CYCLE ____ PHASE ____
NAME PLATE AMPS.* ____ TYPE OF ROTOR ____ SQUIRREL CAGE ____
TORQUE CLASS ____ CURRENT CLASS ____
INSULATION CLASS ____ MOUNTING ____
PERMISSIBLE AMBIENT TEMPERATURE ____ °C OR LESS
NAVY SERVICE ____

*NOTE: THIS CALCULATED VALUE OF FULL-LOAD AMPERES CAN BE USED AS A BASIS FOR SELECTING THE DISTRIBUTION SYSTEM COMPONENTS AND OVERLOAD HEATERS OR RELAYS.

		SIZE / CODE IDENT NO. / DWG. NO.
		SCALE / WEIGHT / SHEET

FIGURE 6. DESIGN MANUAL APPLICATION DRAWING.

Licensed by Information Handling Services

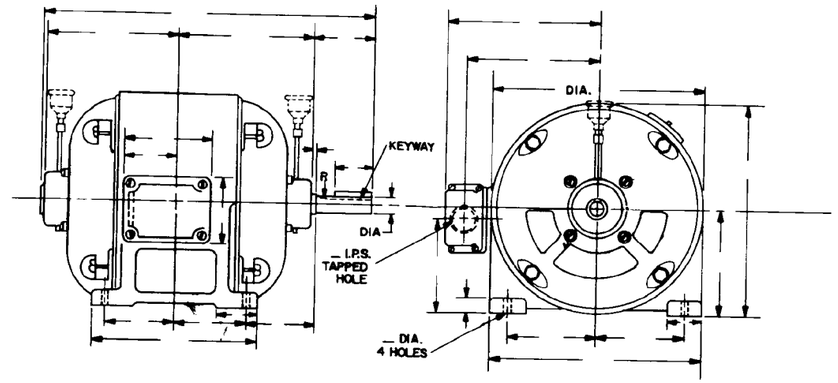

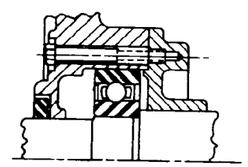

FREE END BEARING
FRONT END

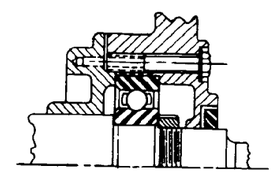

FIXED END BEARING
DRIVE END

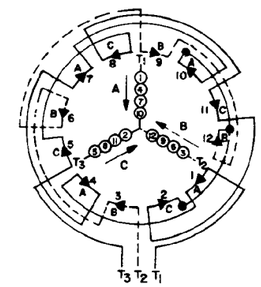

4-POLE, 3-PHASE, SERIES
STAR CONNECTION DIAGRAM

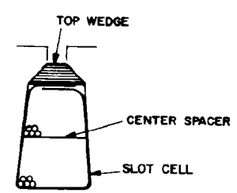

STATOR SLOT DETAIL

STATOR: DIAMETER INSIDE _____ IN., CORE LENGTH _____ IN.
ROTOR: DIAMETER OUTSIDE _____ IN. NO. OF BARS _____ BAR MATERIAL _____
SIZE OF END _____ END RING MATERIAL _____

WINDING DATA	STATOR
NUMBER OF POLES	
TYPE OF CONNECTION	
NUMBER OF SLOTS	
NUMBER OF COILS	
WINDING PITCH IN SLOTS	
TURNS IN SERIES PER COIL	
CONDUCTOR DIAMETER	
CONDUCTOR INSULATION	
RESISTANCE BETWEEN TERMINALS IN OHMS	
WEIGHT OF COPPER ___ LBS.	
TREATMENT OF STATOR WINDING	

INSULATION	MATERIAL	GOV'T SPEC
SLOT CELL		
SPACER		
TOP WEDGE		
"U" WEDGE		
INS. BETWEEN PHASES		
INS. ON COIL EXT.		
INS. ON COIL LEADS		
COMPLETED STATOR		
LEADWIRE		

PARTS LIST (REPAIR PARTS AND TOOL LIST ONLY)

QTY. 1 MTR.	DESCRIPTION	MANUFACTURER'S PART NUMBER

GUARANTEED PERFORMANCE AT RATED VOLTAGE AND FREQUENCY

LOAD	AMP	RPM	EFF.	P.F.
4/4				
3/4				
2/4				
0				
LOCKED ROTOR				

LOCKED ROTOR TORQUE _____ % OF FLT.
PULL-UP TORQUE ____ % OF FLT.
BREAKDOWN TORQUE ____ % OF FLT.

SH 11149

FIGURE 7. SERVICE "C" MOTOR.

Licensed by Information Handling Services

APPENDIX A

SUITABILITY TEST PROCEDURES

FOR

MOTORS WITH SEALED INSULATION SYSTEM

10. SCOPE

10.1 This appendix covers the suitability testing procedures for motors with sealed Insulation system.

10.2 Purpose. The purpose of this procedure is to define the requirements of the test *conditions* and the limitations for the sealed insulation system.

10.3 Definitions.

10.3.1 Insulation resistance. The insulation resistance between two electrodes which are in contact with, or embedded In, an insulating structure, is the ratio of the direct voltage applied to the electrodes to the total current between them. It is dependent upon both the volume and surface resistance of the insulation structure.

10.3.2 Dissipation factor. The dissipation factor of an insulating structure is the ratio of its parallel reactance to its parallel resistance. It is also the tangent of the loss angle (also called loss tangent) and the cotangent of the phase angle.

10.3.3 Capacitance. The capacitance is the ratio of the charge which can be stored in a capacitor to the potential applied to it.

20. APPLICABLE DOCUMENTS

20.1 Not applicable.

30. REQUIREMENTS

30.1 Performance criteria. Performance criteria of the sealed insulation system shall comply with the following:

(a) When the wound stator is heated for 24 hours at 155°C in accordance with 40.1.5(b) the insulation resistance shall be not less than 2,0 megohms.
(b) When the wound stator is subjected to humidification test for one week (168 hours) in accordance with 40.1.5(c), the insulation resistance shall be not less than 1000 megohms.
(c) When the motor is subjected to a submergence test in accordance with 40.1.5(d) for 200 hours, the insulation resistance shall be not less than 2.0 megohms.

40. QUALITY ASSURANCE PROVISIONS

40.1 Sealed insulation suitability tests.

40.1.1 Place to test. Suitability tests shall be conducted at the contractors plant, at commercial laboratory or Government laboratory having necessary equipment and facility to conduct the tests specified herein.

40.1.2 Equipment to be tested. One motor in frame size 215T or larger constructed in accordance with 3.1.31 and using the same material and processes as will be used *in* normal production shall be subjected to tests specified herein.

40,1.3 Type of test equipment. Type of test equipment shall be as follows:

(a) Humidity chamber - The chamber shall be made of steel, or by placing a transparent plastic film having a low moisture permeability over a steel framework. The top of the chamber shall be slanted or peaked (or otherwise arranged) so that the excess condensate shall not drip on the windings. The relative humidity shall be maintained at 100 percent at a temperature of 88°F + 3°F. The humidification shall be sufficient to produce minute droplets of condensate on the insulation surfaces of the equipment under test. However, the amount of condensate shall be controlled so as not to produce

Licensed by Information Handling Services

puddles or streams of water on the insulation surfaces. The motor shall have one end bracket removed to permit free access of the humidified air to all parts of the winding. To ensure that condensate forms on the windings, the motor temperature shall be lower than the chamber air temperature.

(b) Submergence tank - A suitable size tank shall be provided to handle the test motor. Water used may be sea water or 4 percent salt water.

(c) High potential test equipment - Any standard high potential test equipment of suitable capacity may be used provided the frequency of the test voltage is not less than 60 Hz or more than 100 Hz and provided the wave shape approximates a true sine wave. The test voltage shall be measured with a voltmeter driving its voltage from the high-voltaye circuit either directly or through an auxiliary ratio transformer or by means of a voltmeter coil placed in the testing transformer.

(d) Insulation resistance test bridge - A megohm bridge or meter shall be used having a direct current test voltage of 500 volts and with a range of 0.1 to 1,000,000 megohms.

(e) Capacitance test bridge - A capacitance test bridge shall be used having a 60 Hz input with a range of 5 microfarads to 1100 microfarads and with a range of dissipation factor of zero to 50 percent.

(f) Ohmmeter - Any standard laboratory instrument may be used provided the smallest center scale reading is not over 15 ohms.

40.1.4 Test requirements. Test requirements shall be as follows:

(a) Dielectric-high potential - A potential of twice rated voltage plus a thousand volts shall be applied for a period of one minute between isolated circuits to test their insulation, and shall also be applied between each circuit and ground.

(b) Dielectric-normal potential - A potential of normal rated voltage shall be applied for a period of one minute between isolated circuits and between each circuit and ground to test their insulation.

(c) Insulation resistance - Insulation resistance measurement shall be made using a direct potential of 500 volts applied for one minute period. Insulation resistance between each circuit and ground and between isolated circuits shall be measured and recorded. Temperature of the windings and the relative humidity of the surrounding air shall also be recorded. Insulation resistance values shall be corrected to 25°c standard temperature.

(d) Dissipation factor - The capacitance and dissipation factor shall be measured with the capacitance test bridge and the values shall be read directly from the bridge. The dissipation factor between each winding and ground and between each winding shall be made.

WARNING: Due to the need for exposing copper for the connections to the windings, a leakage path is produced by humidification over the various insulation surfaces between the bare copper and the other parts of the equipment that are otherwise insulated from the copper circuit. Therefore, leads shall be kept separated as much as possible and covered with a nonwetting grease. Where insulation measurements are specified, they shall be made with the equipment in the humidity chamber. The length of the leads within the chamber shall be as short as possible not exceeding 24 inches. These leads should be separated. Leads to the windings shall not touch any grounded metal parts.

(e) Surge comparison tests - Commercial surge comparison tester with a voltage range of 0-5000 volts shall be used.

40.1.5 Test procedures. Equipment shall be tested in accordance with the following procedures:

(a) Initial tests - Each test stator shall be given a high potential test and surge comparison test to determine if the windings are satisfactory. Insulation resistance, dissipation factor and d.c. winding resistance shall be measured and recorded as well as the ambient temperature and relative humidity.

Licensed by Information Handling Services

(b) Standardizing test - Each stator shall next be subjected to a standardizing run to arrive at a dry condition and to determine the hot insulation resistance. The test stator shall be placed in a thermostatically controlled oven and heated to 155°C for 24 hours. At the completion of the 24 hour period with the stator at 155°C, measure and record the winding insulation resistance to ground. Remove the stator from the oven and cool to room temperature and easure and record the insulation resistance, dissipation factor and d.c. winding resistance of the stator.

(c) Humidification test - The test stator shall next be immediately placed in the humidity chamber for a period of one week (approximately 168 hours). While under humidification, daily measurements of insulation resistance, and dissipation factor shall be measured. The equipment shall also be given a normal potential test daily. At. the end of the humidification period and within 5 minutes after removal from the humidity chamber the insulation resistance, and dissipation factor shall be measured and recorded. A normal potential test shall also be applied.

(d) No load submergence test - At the completion of the humidification test, place stator in a 130°C oven for 8 hours to arrive at a dry candition. Remove stator from oven, cool to room temperature and measure and record insulation resistance, dissipation factor, d.c. winding resistance and surge comparison test. With fans removed from the shaft [1/] submerge motor in 4 percent salt water and run 200 hour test. Record and measure insulation resistance and dissipation factor after each 50 hour period (time may be adjusted to suit the work day).

1/ - On die cast rotors, it may be necessary to machine off aluminum rotor fans to reduce hydraulic load when running motor submerged. Bearings may be replaced if bearing failure appears imminent. Upon completion of the submergence test, a normal potential test and surge comparison test shall be applied and the motor examined. Photographs of the stator windings shall be taken.

40.1.6 Assembly of data. Data shall be recorded on the forms shown as follows:

(a) Motor data

Stator No.	_____	Motor mfr. Name	_____
Frame	_____	Date of mfr.	_____
Hp	_____	Volts	_____
R/min	_____	Phase	_____

Insulation data: Magnet wire,

Size		No. of Turns	_____
Slot lines	_____	Type Leads	
Phase		Sleeving	
Wedge	_____	End turn tape	_____

Compete description of VPI varnish and any additional varnish treatment, if required.

(b) Standardizing test data

Insulation Resistance at 155°C _____ megohms.
Insulation Resistance at room temperature _____ megohms, at °c.
Dissipation factor at room temperature _____ percent at _____ °c.
D.c. winding resistance _____ ohms at _____ °c.

(c) Humidification test data

	Insulation resistance, (megohm)	Dissipation factor, (percent)	Normal potential (volts)
Initial test			
1day (24 hrs)			
2 day (48 hrs)			
3 day (72 hrs)			
4 day (96 hrs)			
5 day (120 hrs)			
6 day (144 hrs)			
7 day (168 hrs)			
Recovery			

Licensed by Information Handling Services

(d) Submergence test data

	Insulation resistance (megohms)	Dissipation factor (percent)
Air, initial submergence		
Initial		
50 hours		
100 hours		
150 hours		
200 hours		

D.c. winding resistance_____
Normal potential test _____
Surge comparison test _____

40.1.7 Failure criteria. Failure is considered to have occured if any of the test stator windings become open, ground, short circuit or fail the normal potential test. In addition the insulation resistance and dissipation factor shall conform to the following limits:

(a) Standardizing test - Insulation resistance at 155°C shall be not less than 2.0 megohms.
(b) Humidification test - During the humidification test, the insulation resistance corrected to 25°C shall be not less than 1000 megohms and the dissipation factor shall be not greater than 10 percent.
(c) No load submergence test - During the submergence test, the insulation resistance shall be not less than 2.0 megohms.

40.1.8 Test data. Two copies of the test data shall be prepared by the testing activity and submitted to NAVSEC for review. The test data format may be in any convenient form and the data to be submitted shall be as follows:

(a) Data described in 40.1.6 which shall include complete description of winding materials, procedures and varnish treatment.
(b) Description of test equipment and photographs of the stator windings.

Licensed by Information Handling Services

APPENDIX B

IN-PROCESS INSPECTION OF SFRVICE A MOTORS

10. SCOPE

10.1 This appendix covers the in-process inspection of service A motors furnished in accordance with this specification. The inspection details covered herein are not all inclusive and additions and modifications, as applicable, can be made by the manufacturer.

20. APPLICABLE DOCUMENTS

20.1 Not applicable.

30. REQUIREMENTS

30.1 To facilitate the in-process inspection procedure the contractor shall prepare a manufacturing flow chart showing the normal flow of materials, parts, subassemblies, and assemblies through the manufacturing process. The manufacturer shall indicate on the flow chart the points at which the manufacturer conducts in-process inspection and these points shall be designated as inspection stations.

30.1.1 The contractor shall list what items of inspection occur at each of his inspection stations. This list and inspection documents including tolerance standards, Inspection requirements and criteria for conformance and nonconformance shall be at the inspection station and made available to the Government. Positive records of the inspection results shall be made verifying conformance to inspection requirements. Such records shall either physically accompany each item or lot of items or shall be otherwise made available to the Government.

30.1.2 The words "applicable drawing" as used herein mean a required drawing depicting the design offered on contract or order or manufacturer's shop drawing if needed for in-process inspection to depict details not shown on required drawing. Manufacturer's shop drawings may be used for in-process inspection. Inspection requirements are not to be waived or reduced by selection of drawings.

30.2 General inspection items. General inspection items shall be as follows:

(a) Material is as specified on applicable drawing. Material was ordered in accordance with applicable material or component specification and was inspected in accordance with the requirements of the material or component specification.
(b) Welding and brazing is done by qualified welders, and is in accordance with applicable drawing. There is no evidence of nonfusion, weld cracks, undersize welds, incomplete welds, heavy porosity, weld splatter or slag.
(c) Soldered connections are solidly bonded; there is no cold soldering, no rosin joints, no corrosive flux, no fractured joints, or excess solder. Satisfactory connections were made prior to soldering. Bolted connections include approved locking devices and are secured against vibration. Solderless connectors are properly crimped; the connector and crimping tool are proper size.
(d) Finished castings shall be as shown on applicable drawings and are clean and free of molding sand, cracks, blow holes, splits and deformations. Sufficient material is allowed for machining. Casting defects have not been covered by unauthorized repairs.
(e) Machining shall be as shown on applicable drawings. Surfaces, including mating surfaces, as applicable, are smooth, square and are free of burrs, sharp edges, chatter marks, and scratches or damage due to handling. Surface finish is as shown on applicable drawing and there are no tool marks except those normally associated with the indicated surface finish. There are no flaws exposed in the material as a result of machining.
(f) No parts are Government surplus or have been previously used or reclaimed.
(g) Items including hardware (nuts, bolts, lockwashers, etc.) are made of corrosion-resistant material or are given a corrosion-resistant treatment as shown on the applicable drawing.
(h) The Government may require a coil or winding to be cut apart to see the extent of varnish treatment and filling if there is question as to the effectiveness of varnish treatment used.
(i) Bolts , nuts, set screws and other fasteners are secured in a manner which will preclude loosening in service. Locking devices are as shown on the applicable drawing.

Licensed by Information Handling Services

(j) Insulation creepage and clearance distance are in accordance with applicable drawings. Creepage distance were not achieved by means of cemented or butted joints.

30.3 Items to be inspected prior to assembly. Item to be inspected prior to assembly shall be as follows:

(a) Shafts:
(1) Items (a), (b), (e), and (f) of 30.2 apply.
(2) Dimensions, tolerances, keyways, fillets, shoulders, threads, and surface finish are as shown on applicable drawing
(3) Eccentricity tolerances including out of round for the buring seats, bearing shoulder, collector rinq seats, and the cores, seats arm as shown on the applicable drawing.
(4) After welding on appurtenances, shaft has been stress relieved as shown on applicable drawing.
(5) The shaft was not built up in any way to correct errors or reclaim material (except as permitted in MIL-E-917) .
(6) Shoulders are square as shown on the applicable drawing.

(b) Collector ring assemblies:
(1) Items(a) ,(b), (d), (e), (f), and (j) of 30.2 apply.
(2) Dimensions and dimensional tolerances of rings, sleeves and sleeve insulation are as shown on the applicable drawirg.
(3) Manufacturing and assembly processes used are as specified on the applicable drawings. Specific temperatures and curing cycles are as shown on applicable drawing.
(4) Brush contact surfaces are smooth and are free of sharp edges, burrs, porosity, tool or chatter marks. Slip ring grooves have no burrs.
(S) Terminal studs are fixed to the rings in a positive manner as shown on applicable drawing.
(6) Terminal stud insulation is as shown on the applicable drawing.

(c) Fans:
(1) Items (a), (b), (d), (e), (f), (g), and (j) of 30.2 apply.
(2) Dimensions and the number and contour of blades are as shown on the applicable drawing.
(3) Fan surfaces which move the air are free from any irregularities, surplus weld material or any other projections which may be a source of excessive airborne noise.
(4) Fans which break down into several parts are indexed in a manner such that they can be assembled in one way only.

(d) End shields and bearing housings, end cans and frames:
(1) (a), (b), (d) (e), and (f)of 30.2 apply
(2) Sufficient metal is available for drilling and-tapping,
(3) Drilling, tapping and bolt centers are as shown on the applicable drawing. Holes are clean, free of chips and are drilled straight. There are no burred threads. Holes are spot faced and are located so that edge distance is adequate in accordance with applicable drawing.
(4) End shields and frames were cleaned, and qiven a coat of primer and enamel or a coat of rust preventive before storing.
(s) End shields, except mating surfaces, such as bearing housings and rabbets, are cleaned, primed and painted on the inside surface prior to assembly The inside of the frame is primed and painted if it did not receive at least two dips and bakes in the varnish treatment of the stationary electrical components.
(6) Mating surfaces of shields and francs are concentric and square as shown on applicable drawing.
(7) Dimensions, dimensional tolerances and concentricities are as shown on the applicable drawing.
(8) Bearing housings have sufficient metal to permit redrillinq and bushing of the housing.

30.4 Items to be inspected during assembly. Item.. to be inspected durinng assembly shall be as follows.

(a) General:
(1) Items specified in 30.2 apply.
(2) Parts are interchangeable and no hand fittins or selective matching of parts is necessary.

Licensed by Information Handling Services

(3) No shims, spacers or washers are used in the assembly to correct machining or material discrepancies.

(4) Assembly and disassembly of equipment can be done without the use of special tools. Special tools are defined as those tools not listed in National Supply Catalog (copies of this catalog may be consulted in the office of the Defense Contract Administration Service (DCAS) .

(b) Item to be checked during winding and assembly of rotating elements:

(1) Keys shown on t e accepted drawing are used to prevent rotational movement of all rotating parts, (that is, collector rings, rotors or armatures) ,

(2) When any parts are pressed on the shaft the pressure required to press on these parts is within the limits shown on the applicable drawing.

(3) When any parts are shrink fitted on the shaft, the interference shrink fits of the parts are as shown on the applicable drawing.

(4) Axial movement of all parts is prevented by means of press rings, snap rings, press fit, shrink fit, or lockwashers and nuts as *shown* on the applicable drawing.

(5) Fans are secured to the shaft as shown on applicable drawing.

(6) For fabricated rotors, the bars are securely retained in the slots, bars are not able to shift in slots and bars are welded or brazed to the end rings with an even distribution of weld metal. Bars and end rings are of uniform cross-sectional area throughout.

(7) Bearings are of the size and type as shown on the applicable drawings.

(8) Inner races of ball bearings are secured to the shaft by means of shaft shoulders, lockwashers and nuts or by the opposed shoulder method as shown on the applicable drawing.

(9) Bearing locknuts and lockwashers, where used, are as shown on applicable drawing.

(lo) Bearings and bearing seats are free from dirt, sand, metal particles, corrosion, or other foreign material.

(11) Lamination size and stacking are as shown on the applicable drawing.

(12) Slot or ground insulation are as shown on the applicable drawing.

(13) Slot or ground insulation extends beyond stacking as shown on the applicable drawing.

(14) Wire size and type is as shown on applicable drawing. No substitutions.

(15) Wound coils including preformed with dimensions and number of turns as shown on the applicable drawing.

(16) Undue force is not required to insert slot wedge in place and insulation is not damaged or pushed out of place of the wedge.

(17) Slot wedges are of material and size as shown on the applicable drawing. Length of wedge exceeds length of slot as shown on applicable drawing.

(18) Coils are not loose after the wedge is in place.

(19) The wedge size is proper for the size and shape of the slot and there is no possibility that the wedge will cock in the slot and slip out.

(20) Coil connections are insulated as shown on the drawing.

(21) Coil support and phase insulation is as shown on the applicable drawing. Phase insulation is inserted between the phase coils and is shaped to fit coil configuration.

(22) Coil extensions are insulated and secured as shown on the applicable drawing.

(23) Insulation materials are as shown on the applicable drawing.

(24) Insulation is cleaned off unless self fluxing wire is used and coil wire ends are tinned before making soldered connections.

(25) Lead wires are of the type and size shown on the applicable drawing.

(26) Windings are mechanically secured as shown on the applicable drawing.

(27) Completed winding assembly, including winding and pole, given a minimum of two varnish treatments with an approved clear baking varnish when preformed coils are used and are given one varnish treatment prior to insertion in the slots or on the poles. In the case where preformed coils are not used, the complete assembly is given at least three varnish treatments.

(28) Type of varnish treating and baking time cycle, and baking temperatures are as shown on the applicable drawing.

(29) Treated windings and coils are clean, smooth and glossy with good bonding and filling. Varnish seals shall be complete and show no signs of cracks or breaks. Completed winding shall have no air bubbles, air pockets, voids or dry spots on the surface and shall not be soft or sticky.

Licensed by Information Handling Services

(30) There is no sign of excessive varnish buildup on one side of the winding assembly and lack of varnish buildup on other side. The thickness of the varnish on the winding assembly shall be uniform over the entire surface of the windings.
(31) lead wires are insulated from ground and secured to prevent them from moving due to centrifugal force. Length and arrangement of wires shall permit ready repair; there is no aimless wiring resulting in "rats nests". Wiring agrees with applicable drawing.
(32) No pigmented varnish or lacquer or nonacceptable type of varnish or paint was put on any of the rotating elements.
(33) Coils or windings are not nicked or damaged during handling and processing.
(34) Completed rotating elements are dynamically balanced. The type of balance weights and method of securing are as shown on the applicable drawing. They are secured in a manner such that they will not loosen in service. Balance weights are not attached in the air stream of the fan.

(c) Items to be checked during winding and assembly of stationary elements:
(1) Items 30.4 (b)(11)through 29)inclsive, (32) and (33) apply.
(2) Complete stator assembly or stator core is keyed to frame or frame spider as shown on applicable drawing.
(3) Force required to press complete stator assembly or stator core into the frame or frame spider is within the limits shown on the accepted drawing.
(4) Axial movement of the stator within the frame is precluded by means of snap rings, welds, or other means as shown on the applicable drawing.
(5) Lead wires are insulated from ground and secured within the frame with a suitable clamp or fastening device.
(6) Lead wires pass through the frame, enter the terminal box and are secured in such a manner to prevent chafing or abrasion as shown on the applicable drawings.
(7) Terminal lugs are of the type and size shown on the applicable drawing are provided on the leads. Terminal lugs are properly crimped and there are no cut wire strands.
(8) Terminal boxes are of the type and size and are secured as shown on the applicable drawing.
(9) Leads are properly marked as shown on the applicable drawing, (for example T1, T2, T3) .
(10) Coil end extensions dimensions are as shown on the applicable drawing.

30.5 Items to be inspected during final assembly. Items to be inspected shall be as follows:

(a) Items (a) through (j) of 30.2 apply.
(b) Coil ends do not protrude to a point where they may contact the end brackets or the rotating elements.
(c) End shields properly match frames and bearing housings and end caps. Holes aline, there is no excess clearance, and no undue force is required to assemble parts.
(d) Bearing outer races are secured in their housings as shown on applicable drawing.
(e) There is no evidence of grease leakage past the close clearance nonrubbing seals into the motor or along the shaft.
(f) Spring washers, if used, to provide preloading of the bearing, shall be selected and secured in the housing as shown on applicable drawing.
(g) Seals of prelubricated bearings are not damaged and there is no evidence of grease leaking out of the bearing.
(h) Brush holder studs are secured as shown on the applicable drawing.
(i) Brush rigging insulation is as shown on applicable drawing.
(j) Brush holders and springs are of the type and size shown on the drawing.
(k) Brush holders are secured as shown on the applicable drawing.
(i) Brushes are of the manufacturer's grade designation shown *on* the applicable drawing.
(m) Brushes have been properly seated over a minimum of 90 percent of contact area of brush and carbon dust has been removed from the machine.
(n) Brush shunts are adequately attached to the brush material by embedding or riveting.
(o) Brush size is as shown on the applicable drawing and fits properly in the holder without sanding or filing and brushes move freely in the brush holders in the direction parallel to the length of the brush.

Licensed by Information Handling Services

(p) Brush tension is adjustable and is set as shown on the applicable drawing. Spring tension can be readily measured by spring scale.
(q) Brushes are properly alined parallel to the shaft and do not extend beyond the edge of the slip rings.
(r) Brush lug terminals are Properly secured by screws which are not used for securing the brush holders to the rigging.
(s) Brush leads are furnished with lugs which are adequately secured.
(t) water slingers are secured to the shaft as shown on applicable drawing.
(u) Air gaps have been adjusted to design value and are uniform within the limits shown on the applicable drawing.
(v) Bearings have been lubricated with grease as specified on armlicable drawing.
(w) Except where prelubricated bearings are used, grease pipes, cups and drains are as shown on applicable drawing.
(x) Air baffles are securely attached and do not interfere with rotating elements.
(y) Lifting means is provided as shown on applicable drawing.
(z) Equipment enclosure is as shown on the applicable drawing.
(da) Drain plugs are provided as shown on applicable drawing.
(bb) The motor, other than identification plates or shaft extensions is painted as shown on the applicable drawing.
(cc) Identification and instruction plates are legible and are complete as shown on the applicable drawing.
(old) Mounting feet are flat, square, and are as shown on applicable drawing.
(ee) The overall dimensions, mounting dimensions, distance from shaft center line to bottom of feet, and location of terminal boxes are as shown on the applicable drawing.
(ff) For close-coupled motors, the shaft runouts, mounting flange concentricity and squareness are as shown on the applicable drawings .
(gg) Shaft seals are the proper type and are secured as shown on the applicable drawing.
(hh) Where high tensile bolts or screws such as socket heat types are used, provision is made to prevent replacement with a lower tensile strength bolt or screw. There are no slotted head bolts or screws used to secure end brackets to the frame. Thread-cutting screws (self tapping) are not used to secure any part of the motor.
(ii) Where oil lubrication is used, the lubrication system is complete as shown on the armlicable drawing and there is no leakage of oil into or out of the motor.
(jj) Motor, particularly bearing housings, is clean and free of dirt, metal chips or other foregn materials.
(kk) Stationary lead wires do not contact rotating parts.

Licensed by Information Handling Services

INDEX

Paragraph			Page
	3. 1.1	Ambient temperatures	3
	3.1.18.1	Accessibility	12
	3.1.18.3	Alinement, brush holder	12
	3.1.20.2	Aluminum end shields	13
	2.	Applicable documents	1
		Balance:	
	3.5.4.7, 3.5.5.2	Dynamic	27
	3.1.13, 3.5.4.10	Electrical	10,27
	3.1.15, 3.5.1.9	Mechanical	11,24
	3.1.15.1	Bonding, armature and coils	11
	3.1.22	Bearings	13
	3.1.22.2, 3.5.1.6, 3.5.4.5, 3.5.5.1, 3.5.6.3	Ball	13,22,27,28
	3.1.22.3, 3.5.1.7	Sleeve	14,23
	3.5.1.6.2	Sizes and series	22
	3.1.22. 3.2.2	Bearing housing	15
	3.5.1.6.4	Bearing preload washer or springs	23
	3.5.1.6.3	Bearing mounting support	23
	3.5.1.3.1.2	Brazing alloys	22
	3.5.1.12	Brush holder	25
	3.1.18	Brush rigging	12
	3.1.25.4, 3.5.1.16	Cable connectors	16,25
	3.5.4.6	Center of gravity and radii of gyration	27
	1.2	Classification	1
	3.5.1.5.2	Coilhead dimension and forming	22
	3.1.17	Collector rings	12
	3.5.1.5.5	Core material	22
	3.1.7	Duty	3
	3.1,11	Design and types	6
	3.1.14	Dielectric strength	10
	3.1.22.5	Direction of rotatation	15
	3.6	Drawings	28
	3.6.2	Drawing Service A	28
	3.6.4	Drawings Service C	32
	3.1.8, 3.5.4.1	Enclosures	5,26
	3.1.27	Electromagnetic Interference	16
	3.1.20	End shields	13
	3. 1.22.3.2.5	End play	15
	3.5.1.13	Fans, method of attaching to shaft	25
	3.1.16	Field coils	11
	3.1.25.2	Field connections	16
	3.1.31.2.2	Form wound coils	18
	3.5.4.3	Feet	26
	3.5.4.12	Frames and end shields	27
	3.5,1.17	Filters, temporary air	25
	3.1.22.2.1	Grease cups and drains	13 & 14
	3.1.22.2.3	Housing construction	14
	3.1.9,1	Horsepower sizes	5
	3.3	Identification plates	18
	3.1.33, 3.5.4.8	Inclination	18,27
	3.1.30, 3.1.30.1, 3.1.31.1, 3.1.32	Insulation	17 & 18
	3.2	Interchangetiility	18

Licensed by Information Handling Services

INDEX-Continuued

			Page
Paraqraph	3.1.29	Lifting means	17
	3.1.22.2.4, 3.1.22.3.2	Lubrication	14 & 15
	3.5.6.2	Magnetic wire	28
	3.1.17.1, 3.5.1.3, 3.5.2.2	Materials	12,26,19
		Motor requirements:	
	3.5.5	Low noise applications (surface ships only)	27
	3.5.2	Nonmagnetic	25
	3.5.3	Pumps	26
	3.5.4	Submarine service	26
	3.5.1	Service A	19
	3.5.6	Service C	28
	3.1.19, 3.5.4.2	Mounting	13,26
	3.1.2, 3.5.1.10	Noise, airborne	3,24
	3.5.4.9, 3.5.5.3	Noise, structureborne	27,28
	6.1	Ordering data	42
	5.1	Packaging and packing	41
	3.1.28	Painting	17
	3.1.22.4	Provision for measuring speed	15
	3.5.1.2	Reliability	19
	3.4	Repair parts	19
	3. 1.31.2.3	Repairability	18
	3.5. 1.5.4	Rotor winding	22
	4.2	Sampling	33
	1.1	Scope	1
	3.5.1.8	Seals	24
	3. 1.31.1	Sealed Insulation System	17
	3.1.23.2	Securing stator to frame	15
	3.1.23.1	Securing core to shaft	15
	3.1.25.3, 3.5.1.15	Securing terminal leads	16,25
	3.1.21, 3.5.4.11	Shaft	13,27
	3.5.1.11	Shock resistance	25
	3.1.30.1	Slot cell insulation	17
	3.5.1.5.1	Slot fill	22
	3.1.12.6, 3.5.3(d)	Slip	9,26
	3.1.10	Speed	6
	3.1.9	Standardization-	5
	3.1.12.8	Synchronous motor	10
	3.5.1.4	Temperature limits	22
	3.1.24, 3.5.4.4	Terminal boxes	15,27
	3.1.22.3.2.4	Threads	15
	3.5.1.14	Thread cutting screws	25
		Tests:	
	4.3 thru 4.3.4.20	Service A	33 thru 40
	4.4 thru 4.4.1.1	Service C	40
	3.1.12	Torque and current limitations	6
	3.1.12. 1.1	Locked-rotor torque	6
	3.1.12.2	Locked-rotor current	7
	3.1.12.3	Pull-up torque	8
	3.1.12.4	Breakdown torque	8
	3.1.12.7.1	Locked-rotor current and torque for multispeed motors	9
	3.5.1.5.3	Varnish treatment	22
	3,1.3	Voltage	3
	3.1.4	Voltage limitation	3
	3.5.4.14	Warning plate	27
	3.5.1.5	Windings	22

Licensed by Information Handling Services

Licensed by Information Handling Services

STANDARDIZATION DOCUMENT IMPROVEMENT PROPOSAL

OMB Approval
No. 22 R255

INSTRUCTIONS: The purpose of this form is to solicit beneficial comments which will help achieve procurement of suitable products at reasonable cost and minimum delay, or will otherwise enhance use of the document. DoD contractors, government activities, or manufacturers/vendors who are prospective suppliers of the product are invited to submit comments to the government. Fold on lines on reverse side, staple in corner, and send to preparing activity. Comments submitted on this form do not constitute or imply authorization to waive any portion of the referenced document(s) or to amend contractual requirements. Attach any pertinent data which may be of use in improving this document. If there are additional papers, attach to form and place both in an envelope addressed to preparing activity.

DOCUMENT IDENTIFIER AND TITLE

NAME OF ORGANIZATION AND ADDRESS

CONTRACT NUMBER

MATERIAL PROCURED UNDER A

[ ] DIRECT GOVERNMENT CONTRACT [ ] SUBCONTRACT

1. HAS ANY PART OF THE DOCUMENT CREATED PROBLEMS OR REQUIRED INTERPRETATION IN PROCUREMENT USE?

A. GIVE PARAGRAPH NUMBER AND WORDING

B. RECOMMENDATIONS FOR CORRECTING THE DEFICIENCIES

2. COMMENTS ON ANY DOCUMENT REQUIREMENT CONSIDERED TOO RIGID

3. IS THE DOCUMENT RESTRICTIVE?

[ ] YES [ ] NO *(If "Yes", in what way?)*

4. REMARKS

SUBMITTED BY *(Printed or typed name and address - Optional)*

TELEPHONE NO.

DATE

DD FORM 1 JAN 72 1426 REPLACES EDITION OF 1 JAN 66 WHICH MAY BE USED S/N 0102-014-1802

Licensed by Information Handling Services

FOLD

COMMANDER
NAVAL SHIP ENGINEERING CENTER (SEC 6124)
DEPARTMENT OF THE NAVY
WASHINGTON, D.C. 20362

POSTAGE AND FEES PAID

DEPARTMENT OF THE NAVY

U.S.MAIL

OFFICIAL BUSINESS
PENALTY FOR PRIVATE USE $300

DOD 316

COMMANDER
NAVAL SHIP ENGINEERING CENTER (SEC 6124)
DEPARTMENT OF THE NAVY
WASHINGTON, D.C. 20362

FOLD

Licensed by Information Handling Services