DISTRIBUTION LIST

ACTIVITY CODE	KIND	QUANTITY
[illegible]	[illegible]	[illegible]
DATE AUTHORIZED	MM DD YY	

* MICROFILM SHALL BE IN ACCORDANCE WITH MIL-M-9868. TYPE I CLASS I FOR SILVER HALIDE AND TYPE II CLASS 2 FOR DIAZO. 35 MM MICRO REPRODUCTION SHALL BE MOUNTED ON STANDARD TABULATING APERTURE CARDS WITH FORMATS AND CODING IN ACCORDANCE WITH THE LATEST ISSUE OF MIL-STD-804.

16. THIS DRAWING IS DESIGNATED AS A NOISE CONTROL DRAWING (NCD) AND MUST CONFORM TO THE NOISE REVIEW REQUIREMENT OF SECTION 9400-2-9 OF THE SPECIFICATIONS FOR BUILDING SUBMARINES, SSN 688 CLASS. THE NOISE CONTROL FEATURES SHOWN ON THIS PLAN SHALL NOT BE DEVIATED FROM WITHOUT NRP APPROVAL AND ARF AS FOLLOWS:

    A. INTERNAL BEARINGS TO ELIMINATE PERISCOPE VIBRATION REF 1-12 AND 15.

17. FASTENERS REFERENCING THIS NOTE ARE TO BE DYE PENETRANT INSPECTED IN ACCORDANCE WITH MIL-STD-271

18. REF 4-22 TO BE INSUROK GR T-827 AS MANUFACTURED BY THE RICHARDSON CO., 2731 LAKE ST., MELROSE PARK, ILL

19. ITEMS REFERRING TO THIS NOTE SHALL BE DRILLED FOR 1/16 DIA. LOCKING WIRE IN ACCORDANCE WITH FF-S-86.

20. REF 1-39 TO BE MANUFACTURED BY PHILA. RESINS CORP., PART NO. PR610TCF, OR EQUAL

21. FOR CLOSURE CAP FABRICATION AND INSTALLATION SEE REF 5.

GENERAL NOTES

1. THIS DRAWING WAS DEVELOPED FROM REFERENCE 8 THRU 17
2. MILITARY AND FEDERAL SPECIFICATIONS, STANDARDS AND PUBLICATIONS REFERENCED ON THIS DRAWING SHALL BE THE LATEST REVISION OF THOSE USED, UNLESS OTHERWISE SPECIFIED.
3. MACHINING OF THREADS TO BE IN ACCORDANCE WITH FED-STD-H28.
4. ASSEMBLY CALL-OUT IDENTIFIED AS REF 1-3 REPRESENTS ITEM 3 OF REFERENCE 1 OF THIS DRAWING.
5. LUBRICATE THREADS ON REF 1-21 AND 36, REF 2-4 THRU 7, REF 3-7 THRU 10 & REF 4-19 WITH "ANTI-SEIZE COMPOUND" PRIOR TO ASSEMBLY.
6. FOR SHOCK QUALIFICATION, SEE REFERENCE 7 AND 8.
7. INSTALL LOCKING WIRE IN ACCORDANCE WITH MS33540.
8. ROD SEPARATOR, REF 4-11, TO BE EQUALLY SPACED ON CATHODIC RODS, REF 4-2. FASTEN ONE END OF ROPE, REF 4-21, TO TOP OF FAIRING AND WRAP AND TIE-OFF EACH SEPARATOR. ATTACH THE OTHER END OF ROPE TO THE LOWER END OF THE FAIRING.
9. COAT ALL DRILLED HOLES IN REF 1-1, 1-2 AND 1-37 WITH RESIN.
10. BEARING ADAPTER PLATES, REF 2-2, & REF 3-5, SHALL BE ALIGNED WITHIN ± 0.10 INCH RELATIVE TO THE ACTUAL FORE-AFT AND ATHWARTSHIP PERISCOPE CENTERLINE. INSTALL DOWEL PINS, REF 2-3 & 3-6, AFTER FINAL ALIGNMENT. SEE SECTION 10 REF 9, FOR FURTHER INSTRUCTIONS.
11. INSTALLATION & ASSEMBLY OF HELICOIL INSERTS SHALL CONFORM TO MS33537.
12. SEE REFERENCE 5 FOR INSTALLATION OF CLOSURE CAP, SEALS AND ASSOCIATED FASTENERS, REF 5-1 THRU REF 5-6.
13. THE PISTON ROD RETAINER, REF 1-5, SHALL BE INSTALLED 9.375 .020 INCH FWD OF THE ACTUAL ATHWARTSHIP PERISCOPE CENTERLINE AND SHALL BE WITHIN 3 MIN OF TILT TO THE THEORETICAL VERTICAL CENTERLINE OF THE HYDRAULIC HOIST CYLINDER.
14. INFO FOR ID PLATE TO BE INSCRIBED AS SHOWN IN DETAIL REF 1-37.
    (1) C11 SHOULD BE FOLLOWED BY DWG NO. AND REV THAT FAIRING WAS MADE TO.
    (2) SER NO. NAVSSES CODE 083 WILL SUPPLY UPON REQUEST.
    (3) CONTRACT, IF APPLICABLE.
    (4) DESIGN ACTIVITY (CAGE).
    (5) MFG OF FAIRING.
    (6) PART NO. IF APPLICABLE.
    (7) NSN, IF ANY.
15. ID PLATE TO BE INSTALLED AS FOLLOWS:
    (1) RECESS TO BE .08 DEEP IN PORT (INBD) SIDE OF FAIRING.
    (2) RECESS TO BE SEALED WITH CLEAR RESIN IAW NAVSEA 250-34-1
    (3) ID PLATE SHALL BE EMBEDDED IN EPOXY
    (4) ID PLATE SHALL BE MARKED IAW MIL-STD-130 AND MIL-P-15024 TYPE A, FOR CRES TAGS.
    (5) CHARACTERS TO BE METAL STAMPS .25 HIGH
    (6) ID PLATE SHALL BE FREE OF PROTRUSIONS, BURRS, AND NICKS.

REVISIONS

REV	ZONE	DESCRIPTION	BY	DATE	APPROVED

NCD

SEE NOTE 16

REV	SHIP ALT NUMBER	WT UP	WT (LBS)		VCG REF BL	LCG REF ⊠	P OR	TCG REF CL	P S OR O	VAL BY

WEIGHT CONTROL DATA

LEVERS IN FEET TO THE NEAREST TENTH OF A FOOT
USE SEPARATE LINES FOR EACH WT OP, S/A, REV, WT INST'L, WT RMV
I=INSTL R=REMOVE XI=LOAD ITEM INSTALLED XR=LOAD ITEM REMOVED
F=FWD A=AFT P=PORT S=STBD O=C

REVISION STATUS OF SHEET
1 2 3 4

18	NO	2 PERIS ANCILLARY EQUIPMENT	400-6640203
17	NO	1 AND 2 PERIS IC-CKT-K-18E CK-2PE CBLG DIAG	401-4456856
16	NO	2 PERIS FAIRING HOIST CYLINDER ASSY	5ZZ-6744244
15	NO	1 AND 2 PERIS FAIRING DETAILS SHEET 3	400-5901723
14	NO	1 AND 2 PERIS FAIRING DETAILS SHEET 2	400-5901722
13	NO	1 AND 2 PERIS FAIRING DETAILS SHEET 1	400-5901721
12	NO	1 AND 2 PERIS FAIRING CLOSURE CAP	400-5901720
11	NO	2 PERIS-FAIRING ASSEMBLY	400-6015780
10	NO	2 PERIS HEAD WINDOW CLEANER ASSY AND DETS	585-5489407
9	NO	1 AND 2 PERIS INSTALLATION AND ALIGNMENT	400-6016980
8	NO	2 PERIS ARRANGEMENT IN SHIP	400-5901724
7	NO	2 PERIS-ARRANGEMENT IN SHIP	400-6744237
6	NO	2 PERIS-FAIRING INDICATOR MAGNET ASSY	400-6744243
5	NO	2 PERIS-CLOSURE CAP-DETAILS	400-6744242
4	NO	2 PERIS-CATHODIC PROTECTION-DETAILS	400-6744241
3	NO	2 PERIS-LOWER BEARING & ADAPTER-DETAILS	400-6744240
2	NO	2 PERIS-UPPER BEARING & ADAPTER-DETAILS	400-6744239
1	NO	2 PERIS-INDEPENDENT FAIRING DETAILS	400-6744238
NO		TITLE	NAVSEA DRAWING NO

REFERENCES

THIS IS A CAD DEVELOPED DRAWING USING COMPUTERVISION PERSONAL DESIGNER SOFTWARE
THIS DRAWING IS FILED UNDER PART NAME
C:\083\400\6744237\SH1 - LAYER 1

APPROVAL CATEGORY 9

NAVAL SHIP SYSTEMS ENGINEERING STATION PHILA, PA 19112-5083 CODE IDENT NO. 25685

NAVAL SEA SYSTEMS COMMAND WASHINGTON D.C. 20362-5101

SSN 688 CLASS SUBMARINE 751 AND LATER
NO 2 PERISCOPE SYSTEM INDEPENDENT FAIRING ASSEMBLY

SIZE	CAGE NO.	WT GP	NAVSEA DRAWING NO.	REV
F	53711	400	6744237	-

APPROVED FOR NAVSEA

SCALE: NONE

SHEET 1 OF 4

LIST OF PARTS FOR ONE ASSEMBLY

REV	ITEM NO	QTY REQD	ZONE	DESCRIPTION	MATERIAL SPECIFICATIONS	MATERIAL REQT	MATL STOCK NO	PART NO	SCE	APL NO	CAGE NO	REMARKS	HULL APPLICABILITY
	1	1		INDEPENDENT FAIRING ASSEMBLY				F5120101			25685		
	2	1		MOLDED. SECTIONS & I-BEAM				F5120200			25685		
	3	1		UPPER BEARING & ADAPTER ASSEMBLY				F8820400			25685		
	4	1		LOWER BEARING & ADAPTER ASSEMBLY				F8820500			25685		
	5	1		CATHODIC PROTECTION				F8820600			25685		
	6	1		CLOSURE CAP & SEAL				F8820700			25685		
	7	1		FAIRING INDICATING MAGNET				F8820800			25685		

SIZE	CODE IDENT NO.	WT OF	PARTS DRAWING NO.	REV
F	53711	400	6744237	-

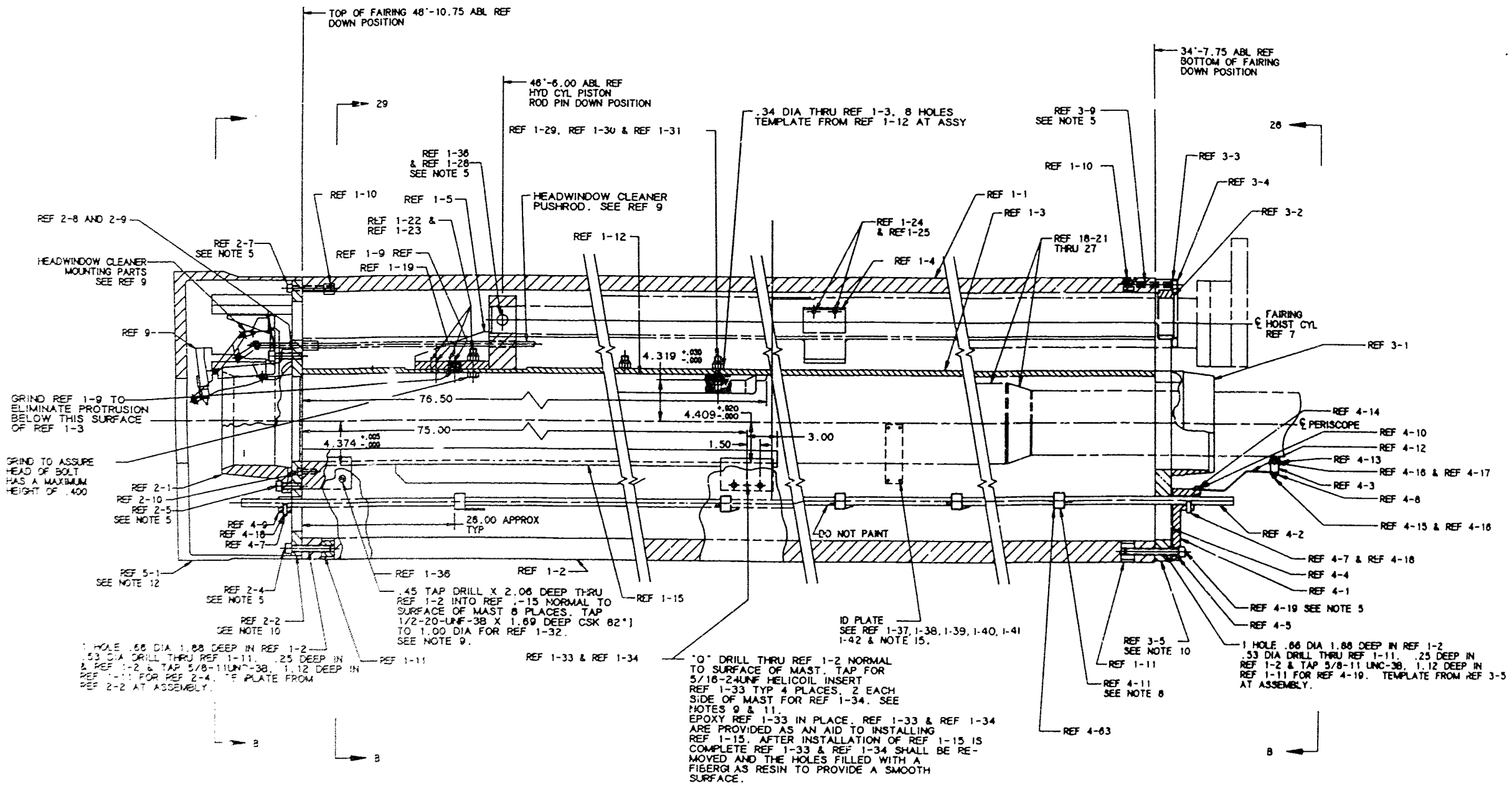

VIEW 20C

SIZE	CAGE NO.	WT QT	MATERIAL DRAWING NO.	REV
F	53711	400	6744237	-
SCALE: 1/4			SHEET 1	

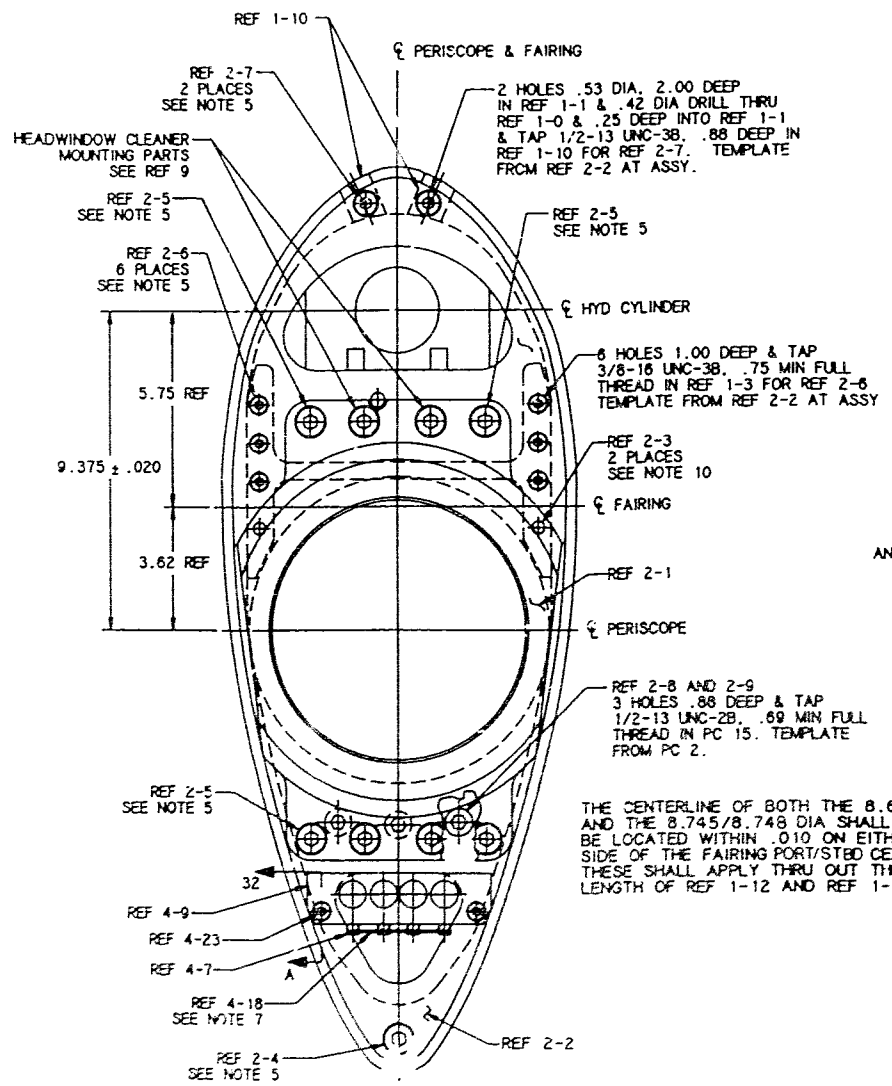

PLAN 31-B
20-C

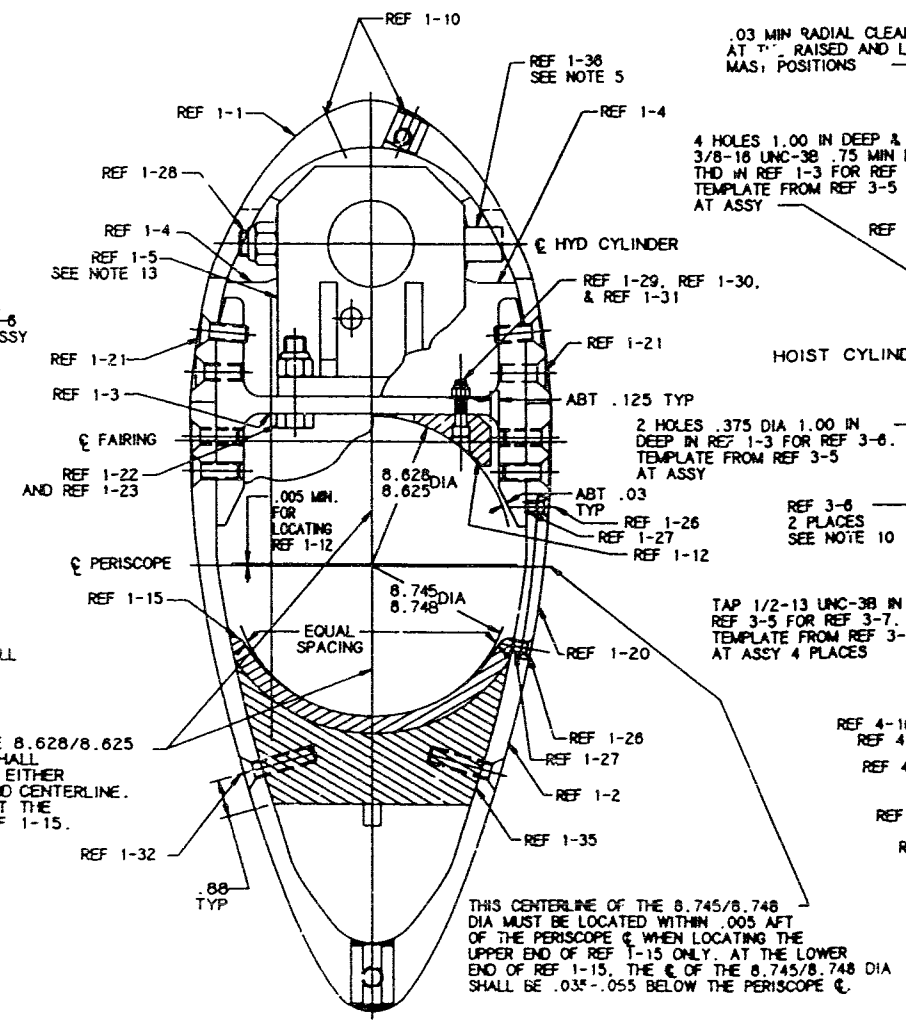

SECTION 29-B
20-C

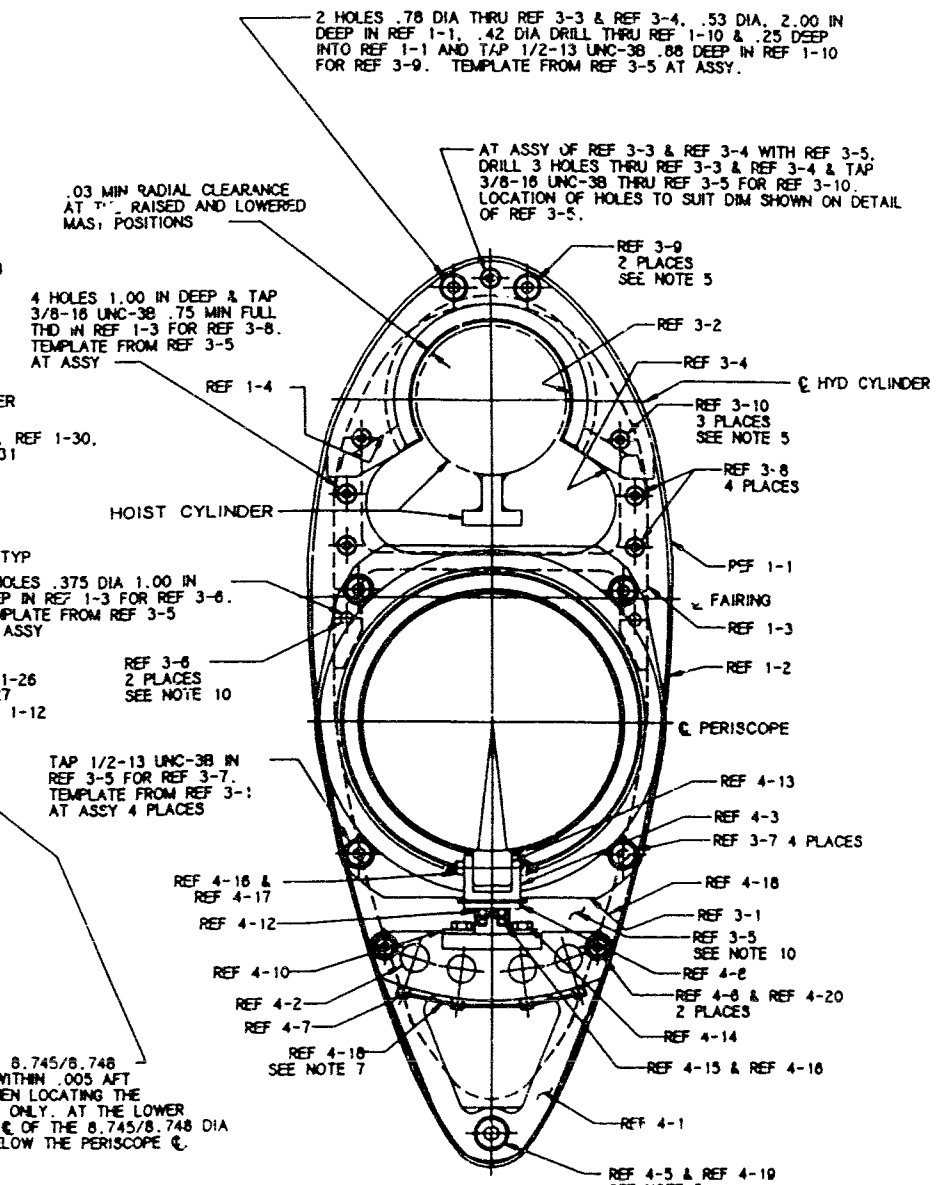

PLAN 26-B
20-C

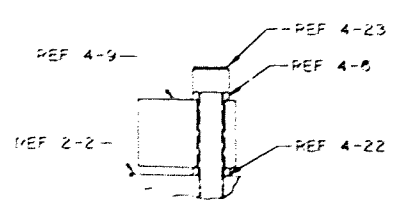

SECTION 32-A
31-A
SCALE 1/1

THIS IS A CAD DEVELOPED DRAWING USING COMPUTERVISION PERSONAL DESIGNER SOFTWARE.
THIS DRAWING IS FILED UNDER PART NAME
C:\063\400\6744237\SH4

F1	53711	400	6744237	--
SCALE 1/1			SHEET 1	