NOTES: UNLESS OTHERWISE SPECIFIED

1. DATUM -A- IS DEFINED AS THE CENTER PLANE OF DATUMS -D- AND -E- . 4 B 4

2. DATUM -C- IS DEFINED AS THE CENTER PLANE OF DATUM -G- . 4 D 4

3. DATUM -C- SHALL BE COPLANAR WITH DATUM -A- WITHIN A .060 WIDE TOLERANCE ZONE.

(F4) 4. ALL SCREW HEADS SHALL BE RECESSED TO MEET REQUIREMENTS OF SPECIFICATION 062-101.

5. ALL SCREW HOLE PATTERNS SHALL HAVE THEIR SCREWS LOCATED WITHIN ⌖ ø-.125

6. SEAL ALL MACHINED EDGES AND HOLES WITH EPON 815/DTA.

7. THE WALL THICKNESS OF THE PORT AND STARBOARD SIDES AT ANY GIVEN STATION SHALL NOT DIFFER BY MORE THAN .062.

8. NO ELEMENT OF BEARING SURFACE SHALL DEVIATE MORE THAN .040 FROM A STRAIGHT LINE, NOR EXCEED A MAXIMUM LOCAL VARIATION OF .010/FOOT. BEARING SURFACES ARE THOSE INDICATED THUSLY: 8 BEARING SURFACES SHALL HAVE A SURFACE TEXTURE OF 32 PER ASA B46.1.
MASTER BEARING BLOCKS, 10 INCHES LONG, SHALL BE MADE FOR EACH BEARING SURFACE. THESE MASTER BLOCKS SHALL HAVE SHAPES COMPLEMENTARY TO THEIR CORRESPONDING BEARING SURFACES AND SHALL BE WITHIN TOLERANCES INDICATED FOR THOSE SURFACES. EACH BEARING SURFACE SHALL INDICATE 50% AREA CONTACT WITH ITS MASTER BLOCK IN ANY 10 INCH LENGTH INCREMENT WHEN RUBBED ALONG THE FULL LENGTH OF THE BEARING SURFACE. AREAS OF NON-CONTACT SHALL NOT BE CONTINUOUS AND THEY SHALL BE NO GREATER THAN 2 SQUARE INCHES. IN NO CASE SHALL ANY 5 SQUARE INCHES OF BEARING SURFACE HAVE MORE THAN 60% NON-CONTACT AREA.

9. REMOVE ALL BURRS AND SHARP EDGES.

10. PACKAGE FOR SHIPMENT PER MIL-STD-726 DESIGNATION 101100AAAAYZZ000A-7Z1PZZ, PACKAGE DRAWING SS-904-2113425. MARK PACKAGES AND SHIPPING CONTAINERS PER MIL-STD-129. MARK THE LONGITUDINAL CENTER OF GRAVITY ON THE SHIPPING CONTAINER.

11. INSTALL HELICOIL INSERTS PER MS-33537.

12. NOTED SCREWS SHALL CONFORM TO FF-S-92, TYPE 1, STYLE 2S.

13. THE CAVITY BETWEEN THE -5 AFT BEARING AND THE -3 AFT SHELL IS FILLED BY CASTING IN SITU A MIXTURE OF THE FOLLOWING MATERIALS: EPON 815 AND EPON 820 RESINS; V 1607 GLASS BEADS; RCI 37-620 HARDENER; AND Z 6040 SILANE.

14. THE NOTED TOLERANCE REQUIREMENTS SHALL BE ACHIEVED BY SHIMMING EACH MID BEARING .010 MINIMUM.

15. NOTED SCREWS SHALL CONFORM TO FF-S-92, TYPE 1, STYLE 2S, WITH NYLOK PER MS15981.

(F4) 16. PRODUCT ACCEPTANCE REQUIREMENTS SHALL CONFORM TO SPECIFICATION NUMBER 062-101 (CAGE NUMBER 25885) DATED 27 NOV 1989

17. BOND -29 IDENTIFICATION TAG TO THE -1 FORWARD SHELL USING EA 934 ADHESIVE.

18. POLYETHYLENE MATERIAL SHALL BE EQUIVALENT TO HERCULES, INC. "HIFAX 1900". ONLY 100% VIRGIN MATERIAL SHALL BE USED IN ITS MANUFACTURE (NO REGROUNDS). THE MATERIAL MUST BE HOMOGENEOUS, STRESS RELIEVED, AND HAVE NO DEFECTS OR STREAKS. MOLECULAR WEIGHT MUST BE 3.5 MILLION MINIMUM, AND MUST BE CERTIFIED USING THE INTRINSIC VISCOSITY OR LIGHT SCATTERING METHOD.

19. THE NOTED BRACKET (ALONG WITH ITS FASTENERS) IS GOVERNMENT FURNISHED. THIS BRACKET SHALL BE INSTALLED AND ALIGNED PER NAVSEA PROCEDURE 0900-017-6010.

20. COLOR CODED PLASTIC SHIM STOCK MAY BE PURCHASED FROM: ARTUS CORPORATION
ENGLEWOOD, NJ 07631
OR MC MASTER-CARR SUPPLY CO.
PO BOX 440
NEW BRUNSWICK, NJ 08903-0440

21. NOTED TAG (-29) SHALL BE IN ACCORDANCE WITH MIL-P-15024, TYPE A, COLOR STYLE I, RELIEF ETCHED.

22. THE NOTED DIMENSIONS SHALL BE MEASURED ALONG THE OUTER SURFACE OF THE -A1 OR -A3 SHELL ASSEMBLIES.

23. THE NOTED DIMENSIONS SHALL BE MEASURED FROM THE JOINT EDGE OF THE -A3 FORWARD SHELL ASSEMBLY.

24. FOR APPROXIMATELY 10 INCHES FROM EACH END OF THE -1 SHELL, -3 SHELL AND -7 SPAR, THE TOLERANCES ON THE NOTED DIMENSIONS SHALL BE AS FOLLOWS: 6.75 +.090/-.060; .66 +.030/-.045; 1.47 +090/-.090.

25. THE NOTED SCREWS SHALL CONFORM TO FF-S-92, TYPE III, DESIGN I, STYLE 3C.

26. THE NOTED SCREWS SHALL CONFORM TO FF-S-86, TYPE VI

27. ALTER LENGTH OF NAS1394CA08L INSERT TO ACHIEVE RECESS SPECIFIED IN NAVSSES SPEC 062-101.

(G1) 28. ~~THE USE OF BUTT WELDS TO ACHIEVE THE REQUIRED LENGTHS OF DETAILS -41 AND -43 IS OPTIONAL. IF BUTT WELDS ARE USED, WELDING SHALL BE DONE PER MIL-STD-278. WELD PROCEDURES SHALL BE QUALIFIED TO MIL-STD-248, AND SUBMITTED TO NAVSSES FOR APPROVAL BEFORE ANY WELDING IS DONE. LIQUID PENETRANT INSPECT EACH WELD WITHIN THE NOTED REGION OF THE SEAM PER MIL-STD-271, LIQUID PENETRANT GROUP I. VISUALLY INSPECT THE WELDS PER NAVSHIPS 0090-003-8000, CLASS I.~~

29. THE IDENTITY OF THE NOTED MATERIALS SHALL BE VERIFIED BY MEANINGFUL ACID, MAGNETIC, OR HARDNESS TESTS AS A MINIMUM VERIFICATION EFFORT.

30. THE 9000501-C1 FAIRED MAST ASSEMBLY SHALL BE BUILT PER NAVSSES SPEC 062-101 AND CONTRACTORS PROCESS SPECIFICATION.

31. THE THREADED ENDS OF THE NOTED SCREWS SHALL BE TRIMMED, IF NECESSARY, SO AS NOT TO PROTRUDE BEYOND THE SURFACE OF THE -43 GROUNDING STRIPS.

32. THE EXTERNAL CONTOUR COORDINATES, X, Y, AND U APPLY AFTER THE -69 AND -71 CAP SCREWS ARE INSTALLED, AND THE -A1, -A3, AND -A5 ASSEMBLIES ARE BONDED TOGETHER.

33. THE NOTED DIMENSIONS APPLY TO THE -7 SPAR.

(G2) 34. TORQUE NOTED BOLTS TO 50±5 FT-LBS.

35. APPLY 16 TO 18 POUND-INCHES OF TORQUE TO THE NOTED BOLTS.

36. BOND PER NAVSSES SPEC 062-101 AND CONTRACTORS PROCESS SPECIFICATION.

37. THE MATERIAL FOR THE NOTED ITEMS IS FIBERGLASS/EPOXY LAMINATE. THE LAMINATE CONSISTS OF UN-WOVEN TAPE PLIES, AND CLOTH PLIES. THE TAPE IS PRE-PREG DESIGNATED AS "SCOTCHPLY 1009-26C" (CAGE NUMBER 30142). THE CLOTH IS 7781 PER MIL-Y-1140, HAVING A "VOLAN-A" (CAGE NUMBER 90227) FINISH AND PRE-IMPREGNATED WITH E 724 (CAGE NUMBER 27129) RESIN. THE LAMINATE IS FABRICATED PER NAVSSES SPEC 062-101 AND CONTRACTORS PROCESS SPECIFICATION.

38. THE NOTED MATERIAL CONSISTS OF 7781 CLOTH PER MIL-Y-1140 HAVING A "VOLAN-A" FINISH (CAGE NUMBER 90227) AND PRE-IMPREGNATED WITH E 724 EPOXY RESIN (CAGE NUMBER 27129).

39. THE NOTED MATERIAL CONSISTS OF 7781 CLOTH PER MIL-Y-1140 HAVING A "VOLAN-A" FINISH (CAGE NUMBER 90227). A MIXTURE OF EPON 828 RESIN (CAGE NUMBER 22893) AND DTA HARDENER PER O-D-1271 IS APPLIED TO THE CLOTH DURING THE LAYUP PROCESS.

40. THIS NOTE WAS DELETED ON A PREVIOUS REVISION.

41. THE -61 LOCK WASHER IS DIMENSIONALLY IDENTICAL TO MS-35333-108, AND ITS MATERIAL IS NICKEL COPPER ALLOY PER QQ-N-286, CLASS A.

42. THE NOTED DIMENSIONS PROVIDE EXCESS MATERIAL WHICH IS SUBSEQUENTLY TRIMMED TO THE PROPER SIZE AT THE NEXT ASSEMBLY LEVEL OF PROCESSING. THEREFORE, THESE DIMENSIONS SHALL NOT BE BOUND BY TOLERANCE REQUIREMENTS.

(G1) 43. ~~WITHIN NOTED SHADED RECTANGLES, FILL OPEN AREAS OF MESH WITH EUTECROD 157 SOLDER (USING EUTESOL 808 FLUX) TO FORM SOLID TABS.~~

(G1) 44. ~~LOCATE NOTED TAPPED HOLES FROM A MATING -41 GROUNDING STRIP SUCH THAT EDGES LABELED A AND B COINCIDE. KEEP MATCHING PAIRS OF -41 AND -43 STRIPS IN SETS. MARK EACH STRIP SUCH THAT IT MAY ALWAYS BE MATCHED WITH THE OTHER MEMBER OF ITS SET.~~

(G1) 45. ~~SOLDER THE -25 PADS AND -35 PATCHES TO THE GROUNDING SCREEN MESH USING EUTECROD 157 SOLDER AND EUTESOL 808 FLUX.~~

(F2) 46. APPLY LED PLATE NUMBER 250 ANTI-SEIZE COMPOUND TO ALL MATING THREADS EXCEPT THOSE OF THE ~~-49~~,-69 & -71 SCREWS.

47. THE TOLERANCE ON THE NOTED PROFILE COORDINATES (THOSE BETWEEN THE BEARING AREAS) SHALL BE ±.03.

LEGEND

SYMBOL	FUNCTION	EXPLANATION	EXAMPLE
1 2 3 (boxes)	DRAWING ZONE DESIGNATOR	BLOCK 1; HORIZONTAL ZONE BLOCK 2; VERTICAL ZONE BLOCK 3; SHEET NUMBER	6 B 12
(balloon)	DRAWING DASH NUMBER BALLOON	THE DASH NUMBER INSIDE THE SYMBOLS CORRESPOND TO THOSE IN THE PARTS LIST.	-207
(flag)	GENERAL NOTE FLAG	THE SYMBOL MEANS "SEE NOTE WHOSE NUMBER IS CONTAINED HEREIN"	25

REVISIONS

REV	SHEET	DESCRIPTION	BY	DATE	APPROVED
F	ALL	(1) DWG COMPLETELY REDRAWN ON CAD. (2) DELETED 1/2-20UNF FLHD, SOCKET CAP SCREWS, DWG NOs 9000545-1,-3,-4,-5. ADDED FHMS PART NOS -69 & -71 (3) ADDED HELICOIL INSERTS PART NO. -73 (4) DELETED HITCO PROCESS SPECS AND REPLACED WITH NAVSSES SPEC 062-101 CHANGES MADE IAW ECP 9425-E-01 SUBMITTED BY CAGE 94304 6/7/88			

REVISIONS CONT. ON SHEET 7

PARTS LIST IS CONTINUED ON SHEET 2.

PARTS LIST

REV	-C1	-A11	-A15	-A9	-A13	-A7	-A5	-A3	-A1	PART NO. OR IDENTIFYING NO.	NOMENCLATURE OR DESCRIPTION	CODE IDENT	STOCK SIZE	MATERIAL DESCRIPTION	MATERIAL SPECIFICATION	ZONE
G1								~~1~~		~~-A15~~	~~SCREEN ASSY-GROUNDING,FWD~~					~~1C5~~
G1									~~1~~	~~-A13~~	~~SCREEN ASSY-GROUNDING,AFT~~					~~4A5~~
								AR		BULK MATL	EPON 828 RESIN	22893		EPOXY RESIN 39	MIL-R-9300 TYPE I, GR O	1C5
	AR									↑	EA 934 ADHESIVE	33564		EPOXY ADHESIVE 17	CQ	2B4
							AR	AR	AR		7781 CLOTH PRE-PREG			GLASS CLOTH / EPOXY	MIL-R-9300 TYPE I, GR O	38
							AR	AR	AR		SCOTCHPLY 1009-26C	30142		GLASS TAPE /EPOXY PRE-PREG	MIL-R-9300 TYPE I, GR O	37
	AR						AR	AR	AR		DTA HARDENER			6 39	O-D-1271	1C5
									AR		Z 6040 SILANE	71984		13	CQ	4C3
									AR		RCI 37-620 HARDENER	86744		13	CQ	4C3
									AR		V1607 GLASS BEADS	07852		13	CQ	4C3
									AR		EPON 820 RESIN	22893		EPOXY RESIN 13	MIL-R-9300 TYPE I, GR O	4C3
	AR						AR	AR	AR	↓	EPON 815 RESIN	22893		EPOXY RESIN 13	MIL-R-9300 TYPE I, GR O	4C3
	AR								AR	BULK MATL	EA 913 ADHESIVE	33564		EPOXY ADHESIVE	CQ	4C3
G1					~~2~~	~~2~~				~~-35~~	~~PATCH-GROUNDING~~		~~.065 THK~~	~~CNA SH~~ 29	MIL-C-15726 CMPSN 70-30, S	~~2A5~~
G1									~~4~~	~~-33~~	~~CONNECTOR-GROUNDING~~		~~.065 THK~~	~~CNA SH~~ 29	MIL-C-15726 CMPSN 70-30, S	~~4B5~~
	1									21 -29 17	TAG, IDENT		30 GA. (.012 THK)	CRES SH 29	QQ-S-766, CL 304 CONDTN A	1B4
G1	~~2~~									~~-27~~	~~BAR-GROUNDING~~		~~.065 THK~~	~~CNA SH~~ 29	MIL-C-15726 CMPSN 70-30, S	~~4C5~~
G1			~~1~~	~~1~~	~~1~~	~~1~~				~~-25~~	~~PAD-GROUNDING~~		~~.065 THK~~	~~CNA SH~~ 29	MIL-C-15726 CMPSN 70-30, S	~~3A5~~
G1				~~1~~						~~-21~~	~~SCREEN-GROUNDING, FWD~~		14 X 18 MESH X .011 DIA. WIRE	BRONZE MESH 29	~~CQ~~	~~3B5~~
G1						~~1~~				~~-19~~	~~SCREEN-GROUNDING, AFT~~		14 X 18 MESH X .011 DIA. WIRE	BRONZE MESH 29	~~CQ~~	~~2A5~~
		1								-15	BEARING-MID, SIDE			POLTHN	CQ 18	3A2
									1	-13	BEARING-MID, AFT			POLTHN	CQ 18	4B3
							1			-11	BEARING-MID, FWD			POLTHN	CQ 18	3B3
								2		-9	COVER,ACCESS			37		2D3
							1			-7	SPAR			37		2D3
									1	-5	BEARING AFT			37		4C3
									1	-3	SHELL-AFT			37		3D3
								1		-1	SHELL-FWD			37		2D3
									2	-A11	BEARING ASSY-MID, SIDE					3A3
G1								~~1~~		~~-A9~~	~~SCREEN ASSY-GROUNDING, FWD~~					~~1C5~~
G1									~~1~~	~~-A7~~	~~SCREEN ASSY-GROUNDING, AFT~~					~~4A5~~
	1									-A5	SPAR ASSY					2C3
	1									-A3	SHELL ASSY-FWD					2D3
	1									-A1	SHELL ASSY-AFT					3D3

DIMENSIONAL TOLERANCES AND SURFACE FINISH - UNLESS OTHERWISE SPECIFIED

DECIMALS (√) PLACES	+/- TOL	FRACTIONS (√) DIMENSION	+/- TOL	WELDMENTS DIMENSION	+/- TOL	CASTINGS DIMENSION	TOLERANCE
.XXX	.005	< 6"	1/64	< 24"	.062	< 2"	+1/16 -1/16
.XX	.02	6" TO 24"	1/32	> OR = TO 24"	.126	2" TO 5"	+3/32 -1/16
.X	.1	> OR = TO 24"	1/16	ALL PLASTICS		5" TO 8"	+1/8 -3/32
WHOLE NUMBERS ARE +/- .1 TOLERANCE				CONDITION	+/- TOL	8" TO 12"	+3/16 -1/8
				MACHINED	.010	12" TO 15"	+1/4 -3/16
				MOLDED	.035	> OR = TO 15"	+1/4 -1/4

(√) MACHINED SURFACE FINISHES = 125 MUIN (AA). BREAK ALL SHARP EDGES .01 TO .02 ALL ANGLES +/- 0 DEGREES 30 MINUTES. MATERIAL SPECIFICATIONS TOLERANCES APPLY TO STOCK SIZES. THREAD DIMENSIONS AND DESIGNATIONS TO BE IN ACCORDANCE WITH NATIONAL BUREAU OF STANDARDS HANDBOOK H-28 AND MIL-STD-9, RESPECTIVELY. UNLESS OTHERWISE SPECIFIED, ALL DIMENSIONS ARE IN INCHES AND FEATURES ARE SYMMETRICAL ABOUT CENTERLINE. AMERICAN NATIONAL STANDARD ANSI Y14.5 IS INVOKED WHERE APPLICABLE.

REVISION STATUS OF SHEETS

SHEET FIRST DIGIT NUMBER \ SHEET LAST DIGIT NUMBER	0	1	2	3	4	5	6	7	8	9
0	■	G	G	G	G	G	G	G		
1										
2										
3										
4										
5										
6										
7										
8										
9										

SUPERSEDING OR MODIFICATION INFORMATION:

SHIP APPLICABILITY

SHIP	REV	SHIPCHECK BY	DATE

CONTRACT NO.:

CAGE NO.:

PREPARED / DATE
CHECKED / DATE
ENGINEER / DATE
APPROVED / DATE

THIS IS A CAD MAINTAINED DRAWING DEVELOPED WITH AUTOCAD R14 SOFTWARE CHANGES SHALL BE INCORPORATED BY THE DESIGN AUTHORITY.

NAVAL SHIP SYSTEMS ENGINEERING STATION
PHILA., PA. 19112-5083
CAGE NO. 25685
CODE: 96124
PHONE: (215) 897-8773

		DATE
PREPARED	R.H.OBERLE	7-12-89
CHECKED	P. CHIACHETTI	9-20-89
ENGINEER	P.S. HUANG	
APPROVED	P. DITARANTO	

ACCEPTED FOR NAVSEA

APPROVED BY NAVSEA

DEPARTMENT OF THE NAVY
NAVAL SEA SYSTEMS COMMAND
WASHINGTON, D.C. 20362

FAIRED MAST ASSEMBLY TRIDENT (OE-207)

FAIRED MAST ASSEMBLY TRIDENT

SIZE	CAGE NO.	WT GRP	NAVSEA DRAWING NO.	REV
F	53711	522	9000501	G

SCALE - NONE

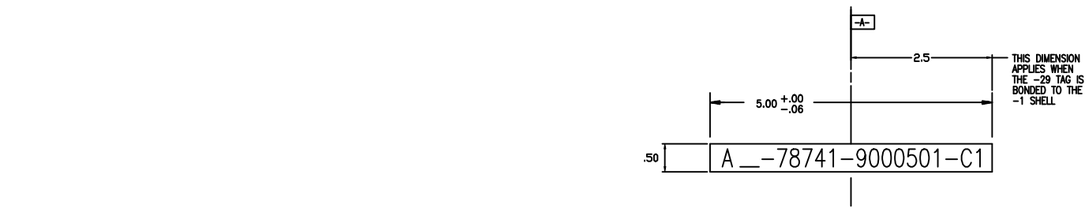

DETAIL OF -29 /21/ 2B4
IDENTIFICATION TAG

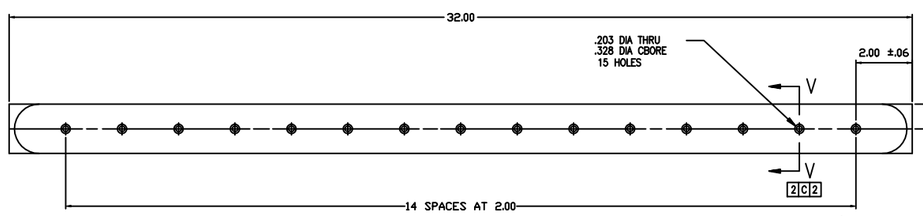

DETAIL OF -11 FWD MID-BEARING 3A3

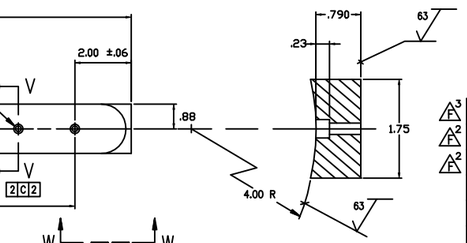

SECTION V-V 3C2
SCALE 1/1

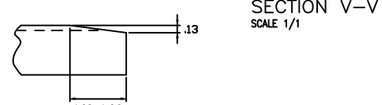

VIEW W-W (TYP EACH END)
SCALE 1/1

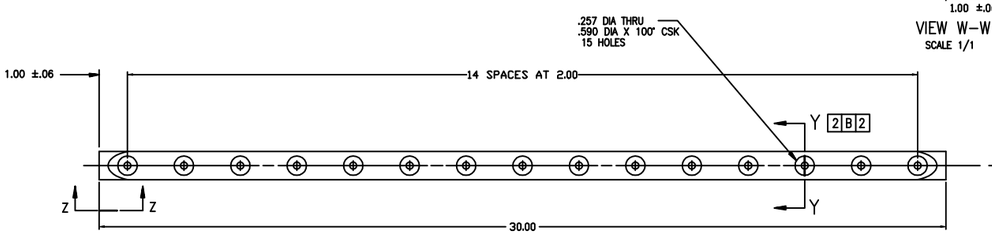

DETAIL OF -13 AFT MID-BEARING 4A3

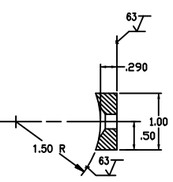

SECTION Y-Y 3B2
SCALE 1/1

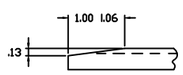

VIEW Z-Z (TYP EACH END)
SCALE 1/1

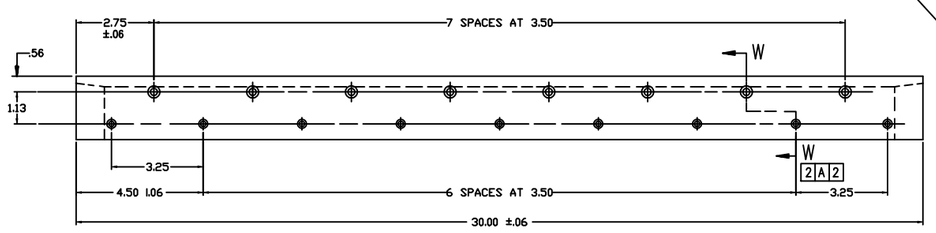

DETAIL OF -A11 SIDE MID-BEARING ASSY 3A3

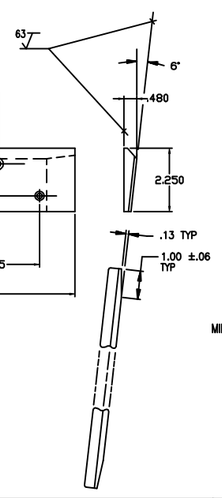

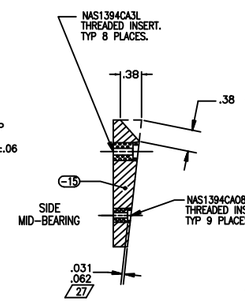

SECTION W-W 3A2
SCALE 1/1

F 3	310								-73		INSERT HELICAL COIL		5/8-18UNF X .938 LENGTH	CRES, SCREW-LOCK TYPE	NO. 3591-10 CN	2D3
F 2	8								-71		SCREW,FL HD. MACHINE		5/8-18UNF-2A X 1.25 LONG	CRES, CL 304 CONDTN B /29/	QQ-S-763C, FFS-92, TY 1, STYLE 2S	3B4
F 2	302								-69		SCREW,FL HD. MACHINE		5/8-18UNF-2A X 1-5/8 LONG	CRES, CL 304 CONDTN B /29/	QQ-S-763C, FFS-92, TY 1, STYLE 2S	2A4 2B4
	4								-67 /19/		WASHER	25685	1.25 OD X.53 ID X .188 THK	NCA	QQ-N-281 CL A	3C4
	4								-65 /19/		BOLT,FF-S-85, TYPE 2,STYLE 10P	25685	.500-20UNF-3A X 2.00 LONG	NCA	QQ-N-281 CL A, CD	3C4
	AR						AR	AR	BULK MATL		LED PLATE NO.250	84180		ANTI-SEIZE COMPOUND	MIL-A-907	/46/
							AR		BULK MATL		7781 CLOTH			GLASS CLOTH	MIL-Y-1140	1C5
G 1								AR			SELECTIVE (BRUSH) PLATING			~~NICKEL~~	~~MIL-STD-865~~	~~4C6~~
G 1			~~AR~~	~~AR~~	~~AR~~	~~AR~~			~~/43/~~	~~/45/~~	~~EUTESOL 808~~	~~72271~~		~~FLUX~~	~~CQ~~	~~2A5~~
G 1			~~AR~~	~~AR~~	~~AR~~	~~AR~~			~~/43/~~	~~/45/~~	~~EUTECROD 157~~	~~72271~~		~~SOLDER~~	~~CQ~~	~~2A5~~
								AR			SEALANT, THREAD			LOCTITE 277	MIL-S-46163 TYPE I, GR L	4B3
G 1							~~AR~~	~~AR~~	~~BULK MATL~~		~~SOLDER,SOFT~~			~~60% TIN 40% LEAD~~	~~CQ~~	~~4B5~~
						15			-63 /26/		SCREW, CAP-SKT HD		.190-32UNF-2A X 1.00 LONG	NCA /29/	QQ-N-281 CL A OR CL B	3A3
								15	-61 /41/		WASHER LOCK-INTERNAL TOOTH		.250 DIA. NOM	NCA /29/	QQ-N-286, CL A	4B3
								15	NAS1291C4M		NUT,SELF-LOCKING,HEX		.250-28UNF-3B	CRES A286 /29/	AMS5737	4A3
								15	-59 /25/		SCREW,FL HD		.250-28UNF-2A X 3.00 LONG	NCA /29/	QQ-N-281 CL A OR CL B	4A3
						AR		AR	-57 /14/		SHIM STOCK	/20/	AR	PLASTIC	CQ	2A3
G 1								~~2~~	~~-43~~		~~GROUNDING STRIP-INTL~~		~~.188 THK X AR~~	~~6AL-4V TITANIUM PL /29/~~	~~MIL-T-9046 TYPE III, CMPSN C~~	~~4A3~~
G 1								~~2~~	~~-41~~		~~GROUNDING STRIP-EXT~~		~~.188 THK X AR~~	~~6AL-4V TITANIUM PL /29/~~	~~MIL-T-9046 TYPE III, CMPSN C~~	~~4B3~~
G 1			1						~~39~~		~~SCREEN-GROUNDING-FWD~~		~~14 X 18 MESH X .011 DIA. WIRE~~	~~BRONZE MESH /29/~~	~~CQ~~	~~3C7~~
G 1				~~1~~					~~-37~~		~~SCREEN-GROUNDING,AFT~~		~~14 X 18 MESH X .011 DIA. WIRE~~	~~BRONZE MESH /29/~~	~~CQ~~	~~3B7~~
	4								-55 /12/		SCREW,FL HD		.190-32UNF-2A X .50 LONG	NCA /29/	QQ-N-281 CL A OR CL B	4C5
		9							NAS1394CA08L		INSERT-THREADED		.164-32UNC-3B	CRES A286 /29/	AMS5737	2A2
	4	8				15			NAS1394CA3L		INSERT-THREADED		.190-32UNF-3B	CRES A286 /29/	AMS5737	2A2
								18	-53 /12/		SCREW,FL HD		.164-32UNC-2A X .88 LONG	CRES /29/	QQ-S-763 CL 316, CONDTN B	3A3
								16	-51 /12/		SCREW,FL HD		.190-32UNF-2A X 1.00 LONG	CRES /29/	QQ-S-763 CL 316, CONDTN B	4A3
G 1								~~484~~	~~/12/~~ ~~-49~~	~~/31/~~	~~SCREW,FL HD~~		~~.190-24UNC-2A X 1.12 LONG~~	~~NCA /29/~~	~~QQ-N-281 CL A OR CL B~~	~~4B3~~
							4		-47 /15/		SCREW,FL HD		.250-28UNF-2A X .63 LONG	NCA /29/	QQ-N-281 CL A OR CL B	2C3
						8			MS124656		INSERT HELICAL COIL		.250-28UNF-2B	CRES TYPE 304 /29/	MIL-I-8846	2C3
	1								SS-522-4491146		BRACKET - HOIST CYLINDER /19/	25685				4D4
						4			09ND36-080		NUT SPLINE /19/	25685	.500-20UNJF-3B	NCA	QQ-N-281 CL A	4C4
								15	AN316C4R		NUT,JAM-HEX		.250-28UNF-3B	CRES	QQ-S-763 CL 304,CONDTN A	4B3
G 1	-C1	-A11	~~-A15~~	~~-A9~~	~~-A13~~	~~-A7~~	-A5	-A3	-A1	PART NO. OR IDENTIFYING NO.	NOMENCLATURE OR DESCRIPTION	CODE IDENT	STOCK SIZE	MATERIAL DESCRIPTION	MATERIAL SPECIFICATION	ZONE

PARTS LIST

SIZE	CAGE NO.	WT GRP	NAVSEA DRAWING NO.	REV
F	53711	522	9000501	G
SCALE - 1/2 & AS NOTED			SHEET 2	

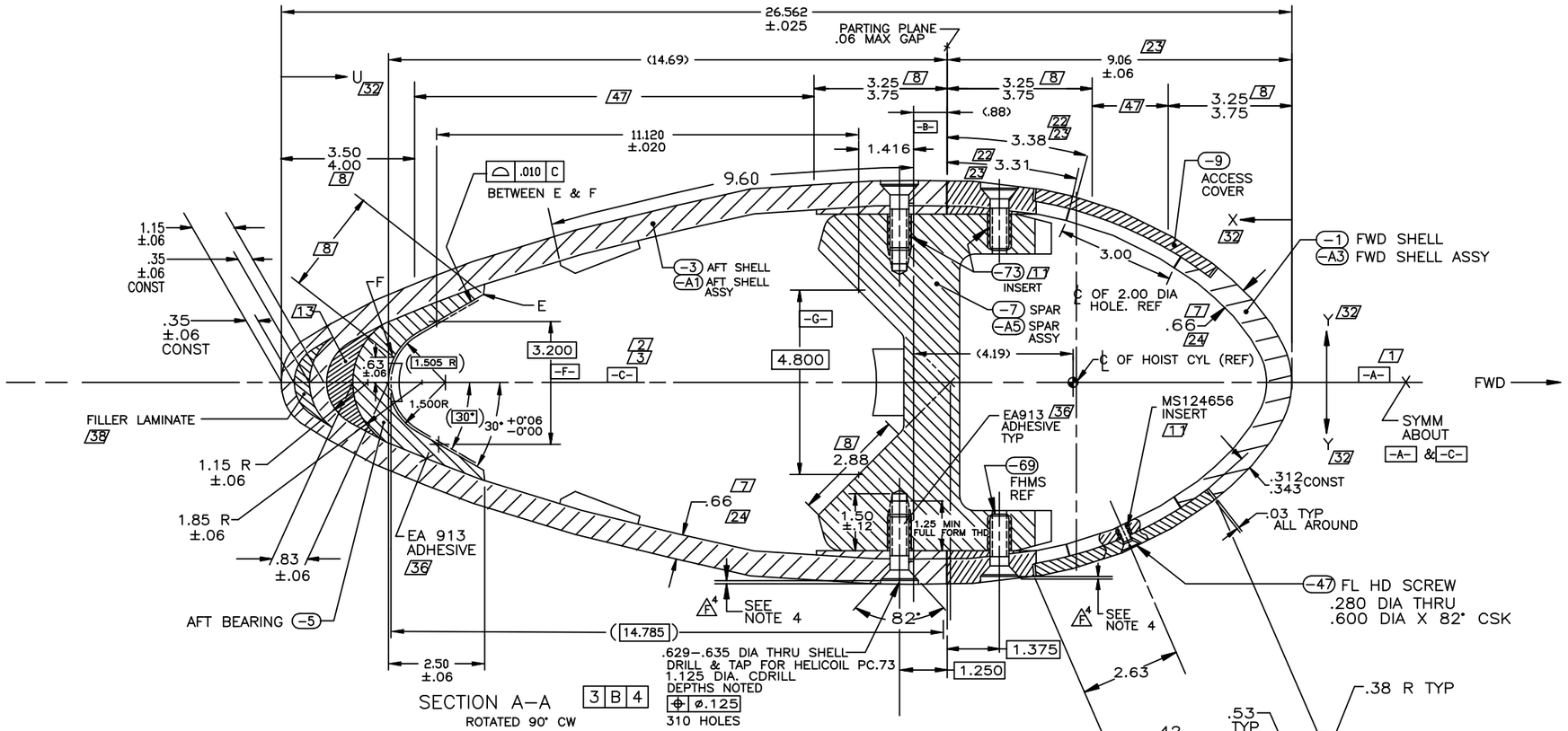

SECTION A–A 3 B 4
ROTATED 90° CW

STA-TION	X ± .01	Y ± .01
0	0.00	0.00
1	0.33	1.17
2	0.53	1.52
3	1.04	2.18
4	1.58	2.71
5	2.09	3.14
6	3.14	3.83
7	4.45	4.48
8	5.76	4.90
9	6.55	5.07
10	8.38	5.29

STA-TION	U ± .01	Y ± .01
-B-	16.62	5.31
11	15.55	5.30
12	12.93	5.09
13	10.33	4.64
14	7.71	4.00
15	5.08	3.18
16	3.77	2.70
17	2.46	2.16
18	1.15	1.46
19	0.45	0.97
20	0.00	0.00

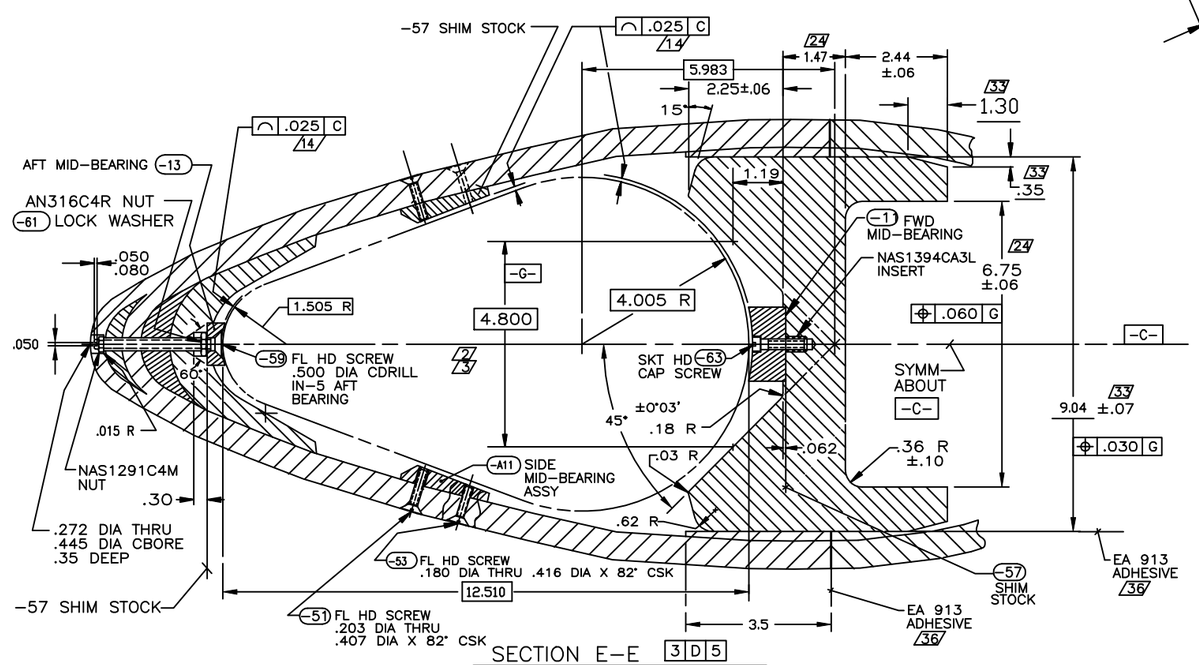

SECTION E–E 3 D 5
ROTATED 90° CW

SIZE	CAGE NO.	WT GRP	NAVSEA DRAWING NO.	REV
F	53711	522	9000501	G
SCALE – 3/4			SHEET 3	

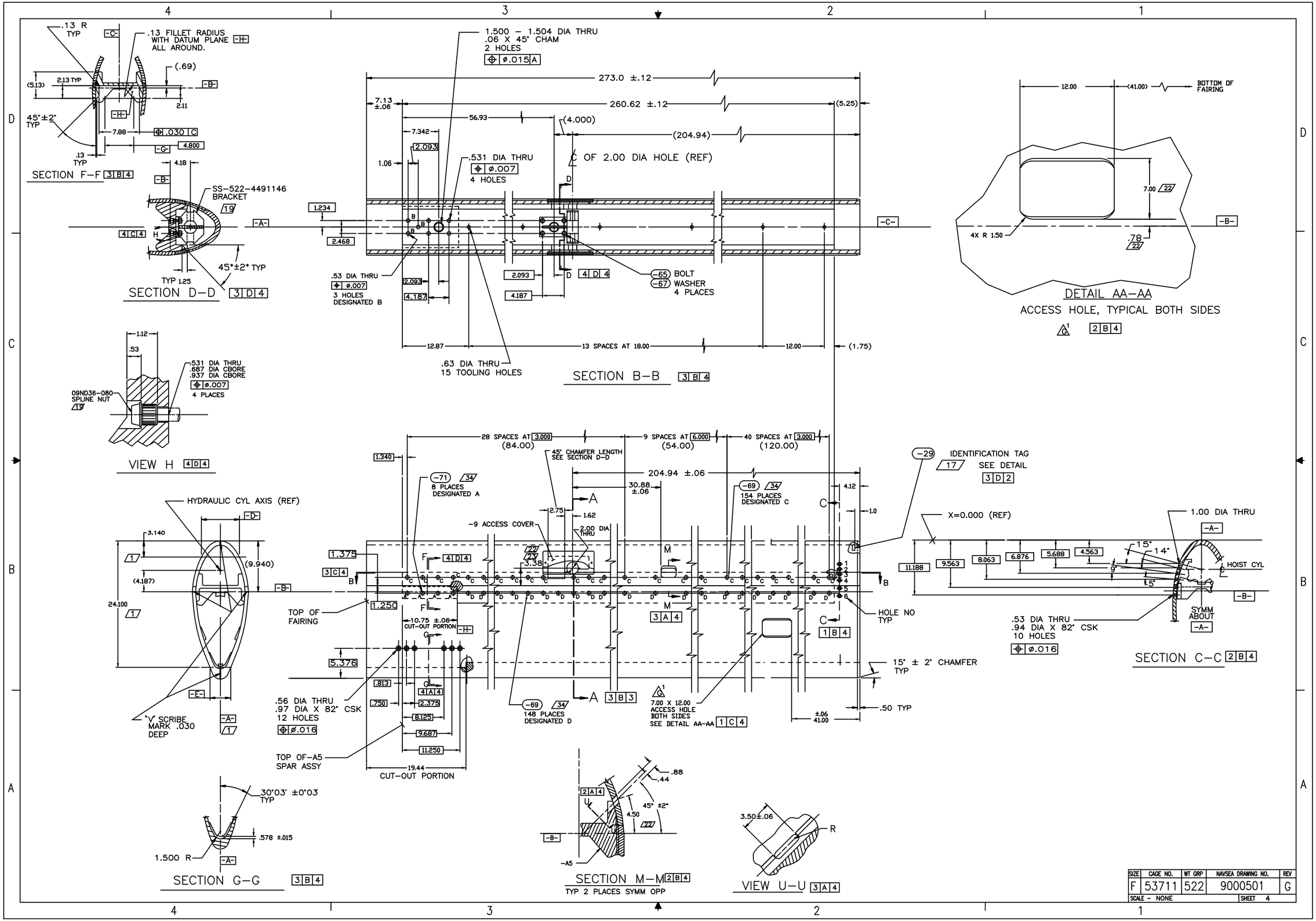

SIZE	CAGE NO.	WT GRP	NAVSEA DRAWING NO.	REV
F	53711	522	9000501	G
SCALE – NONE			SHEET 4	

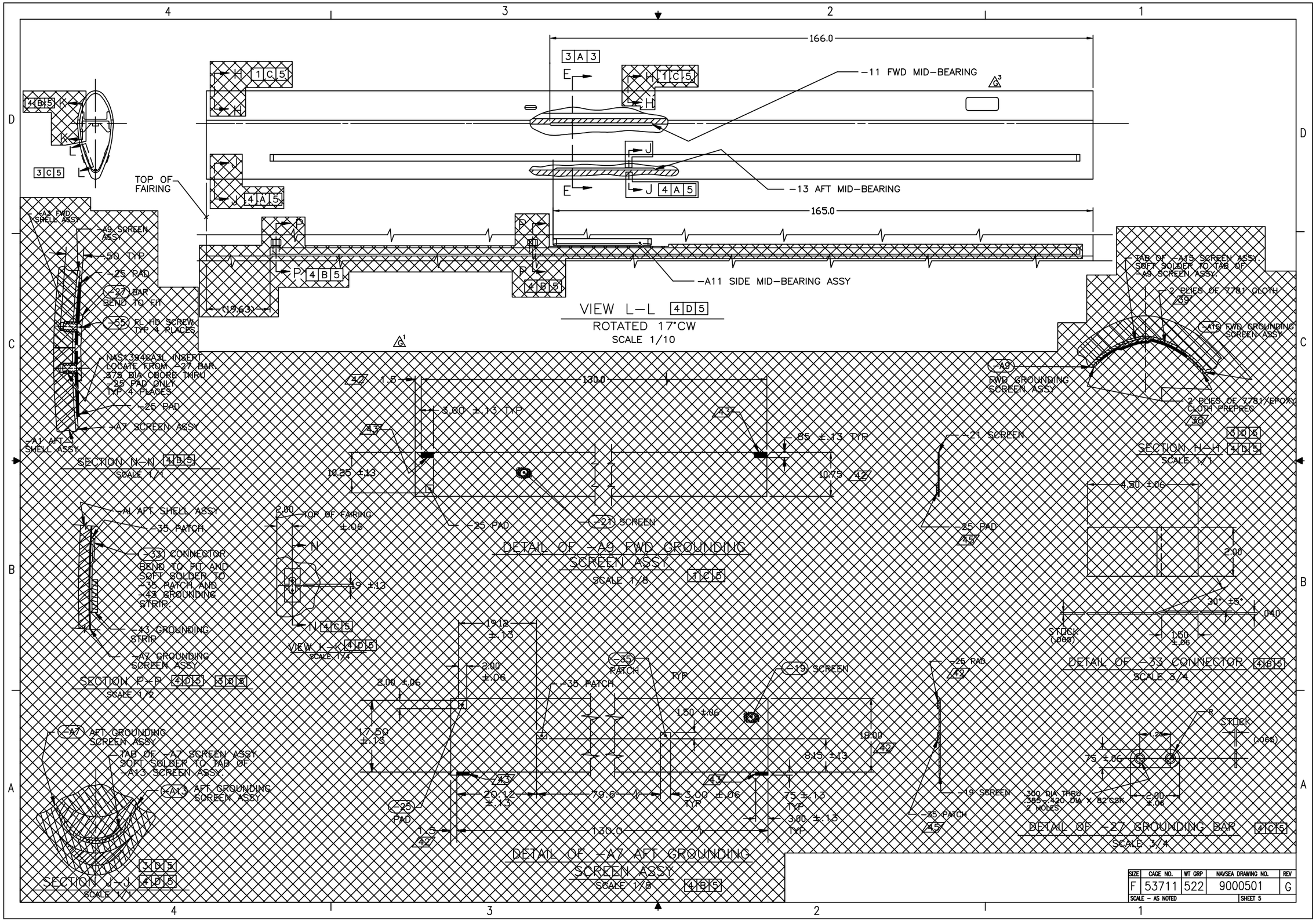

SIZE	CAGE NO.	WT GRP	NAVSEA DRAWING NO.	REV
F	53711	522	9000501	G
SCALE – AS NOTED			SHEET 5	

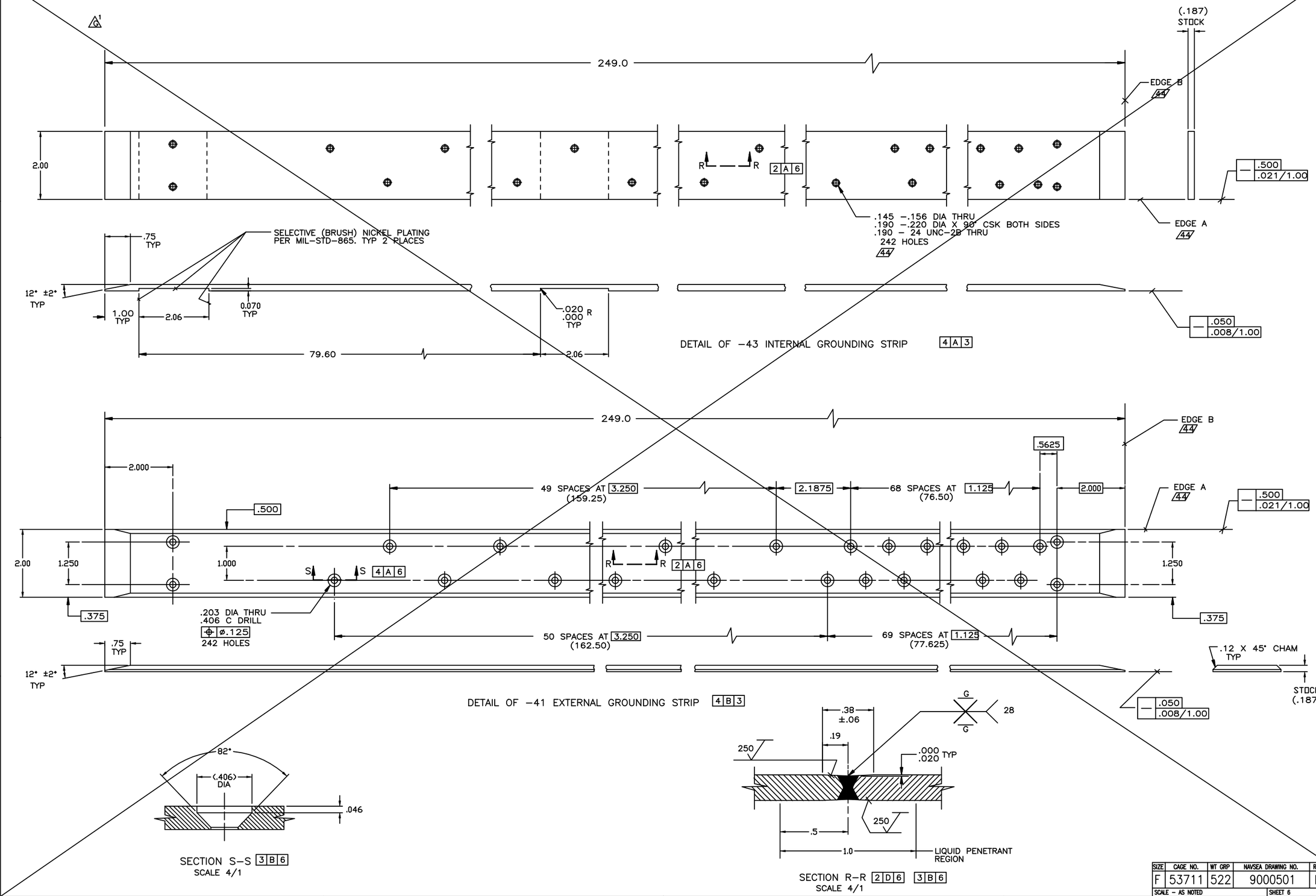

SIZE	CAGE NO.	WT GRP	NAVSEA DRAWING NO.	REV
F	53711	522	9000501	F
SCALE – AS NOTED			SHEET 6	

REVISIONS CONT.

REV	SHEET	DESCRIPTION	BY	DATE	APPROVED
G	ALL	(1) DELETED PARTS -A7, -A9, -A13, -A15, -19, -21,-25,-35,-37,-39,-41, EUTESOL, EUTECROD.			
	1	(2) CHANGED TORQUE FROM 25-32 FT-LBS TO 50±5 FT-LBS.			
	4,5	(3) ADDED 7.00 X 12.00 ACCESS HOLES BOTH SIDES AND DETAIL AA - AA.			
		CHANGE 1 MADE IAW NSWCCE-SSES ECP 99002 APPROVED BY NUWC NP-MM072 , 29 JUL 99			
		CHANGE 2 MADE IAW NSWCCD-SSES LTR 4280 SER 9613 OF 23 APR 01			
		CHANGE 3 MADE IAW TYCOM DISCRETIONARY MOD.			

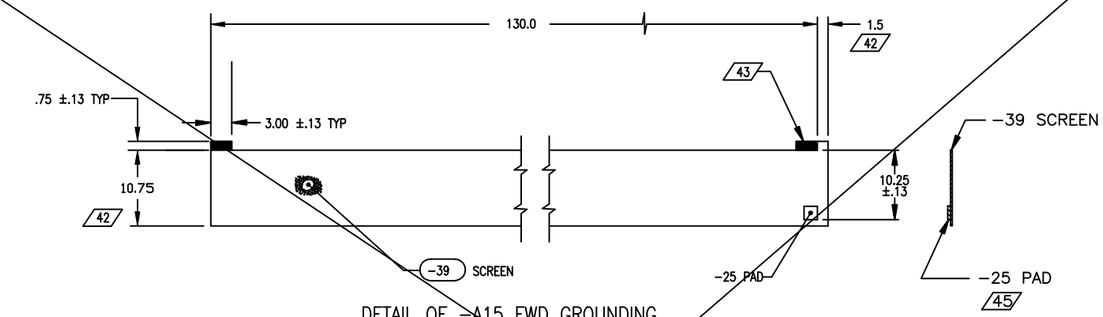

DETAIL OF -A15 FWD GROUNDING SCREEN ASSY
SCALE 1/8

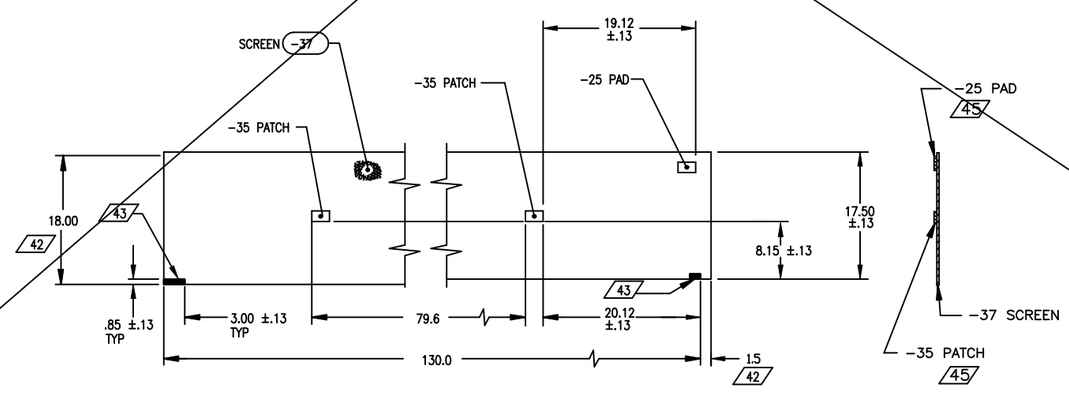

DETAIL OF -A13 AFT GROUNDING SCREEN ASSY
SCALE 1/8

SIZE	CAGE NO.	WT GRP	NAVSEA DRAWING NO.	REV
F	53711	522	9000501	G
SCALE - 3/4			SHEET 7	