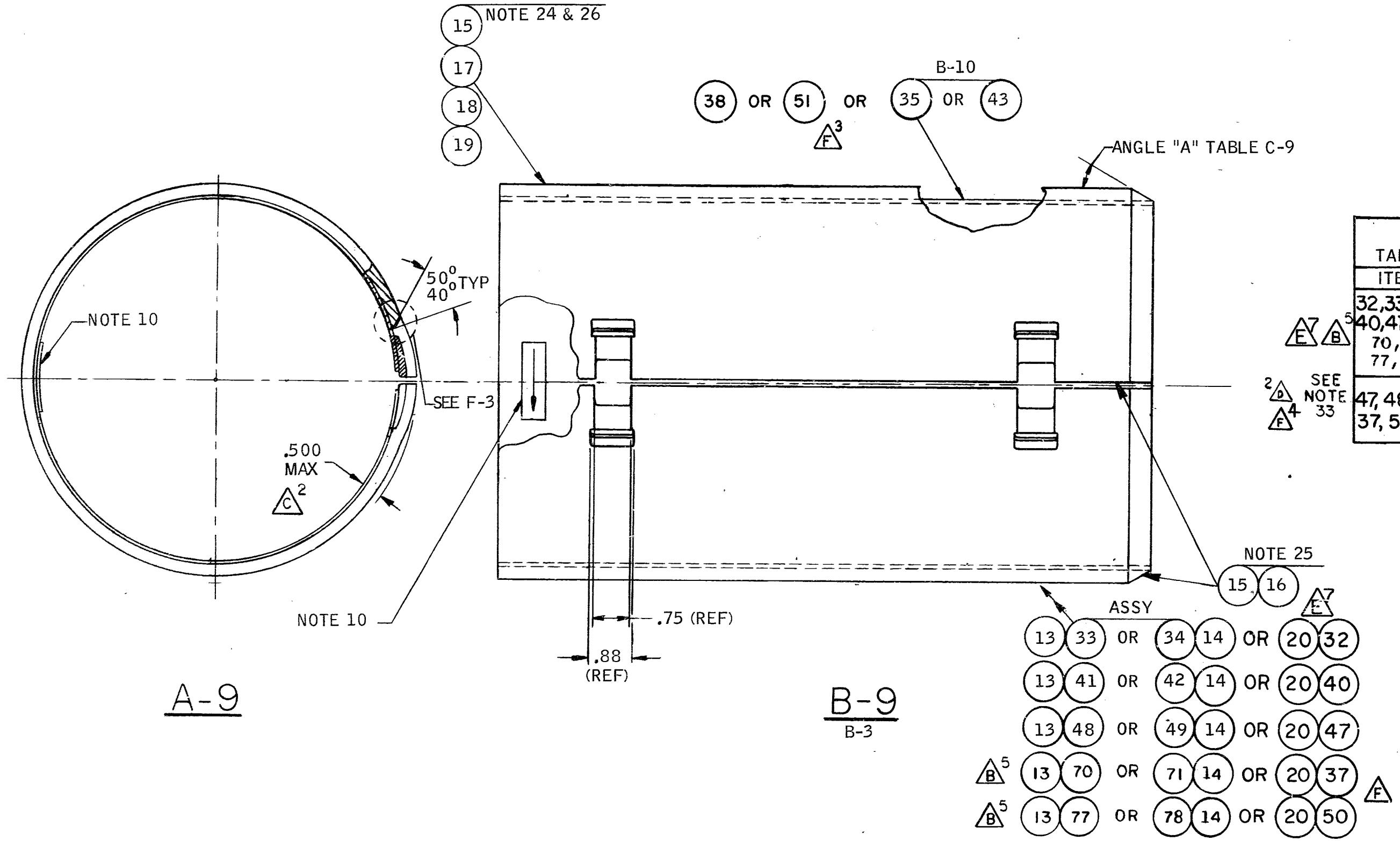

TABLE C-9

ITEM	ANGLE "A"
32,33,34 40,41,42 70,71 77,78	35° 25°
47,48,49 37,50	OMIT

E 7 B 5

2 D SEE NOTE 33 F 4

UPPER, MID AND LOWER BARREL COVER ASSEMBLIES

DRAWN

REVIEWED

SIZE	CODE IDENT	NAVSEA DRAWING NO.		
B	25685	SS	472	4491223
SCALE: NONE		SH REV A B C D E F		SH 9

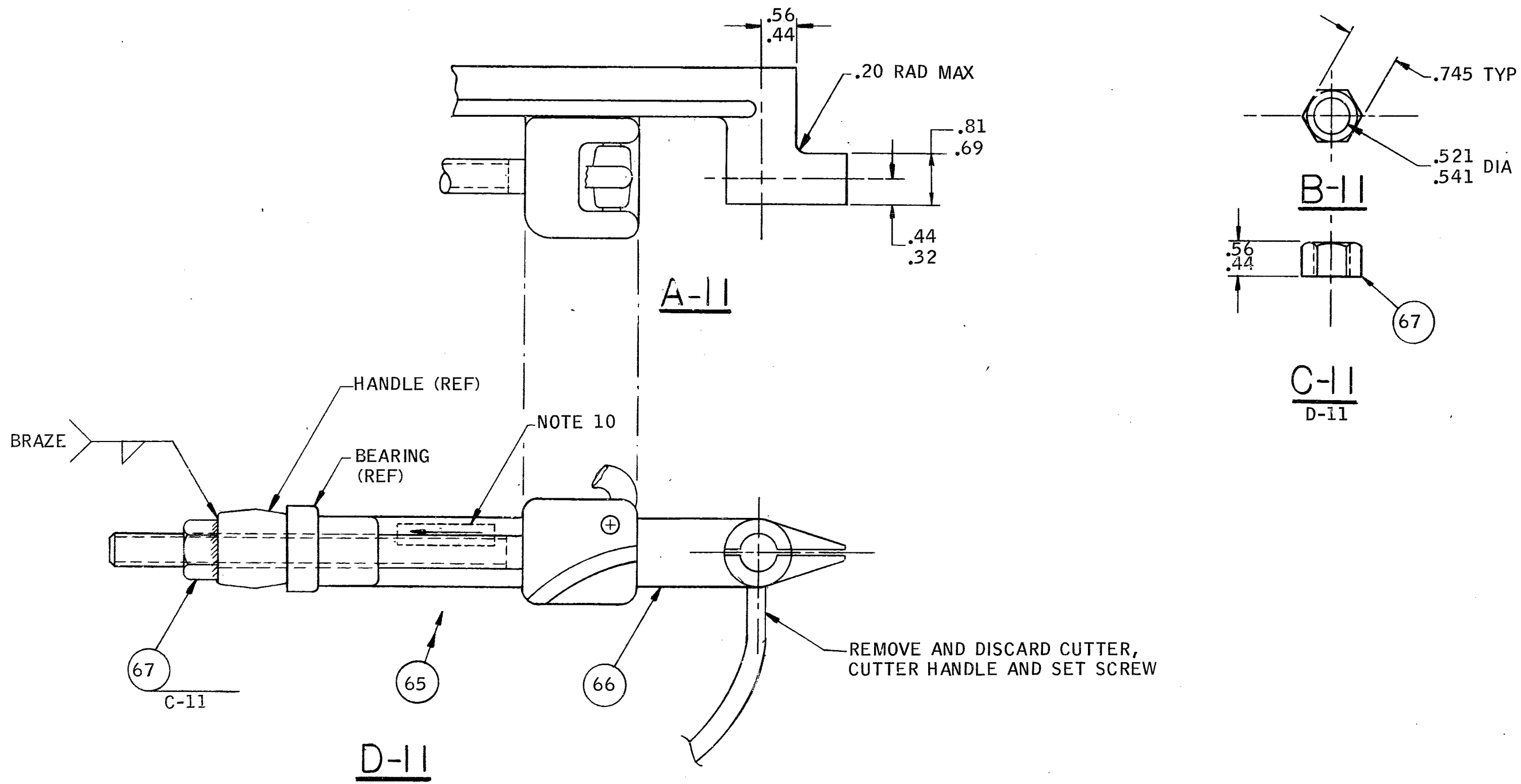

HEX DRIVE AND BANDING TOOL MODIFICATION	DRAWN	SIZE	CODE IDENT	NAVSEA DRAWING NO.
	REVIEWED	B	25685	SS 472 4491223
		SCALE: NONE	SH REV A	SH 11

ITEM NO.	NAME 3 2 1 0	QTY	MATERIAL	SPEC	REMARKS AND/OR STOCK NO.	*	NOTE 5	ON SHT	ITEM NO.
1	CAMOF UNIT, MX9997/BPQ, ASSY NO 1	1	→	→	C/O ITEMS 5, 23, 33, 41, 48, 55, 56, 57 AND 60, FSN 5840-01-177-3272			3	1
2	CAMOF UNIT, MX9998/BPQ, ASSY NO 2	1	→	→	C/O ITEMS 6, 24, 34, 42, 49, 55, 56, 57 AND 60, FSN 5840-01-177-3273			3	2
3	CAMOF UNIT, MX9997/BPQ, ASSY NO 3	1	→	→	C/O ITEMS 5, 23, 70, 77 48 55 56 57 AND 60			15	3
4	CAMOF UNIT, MX9998/BPQ, ASSY NO 4	1	→	→	C/O ITEMS 6, 24, 71, 78 49 55 56 57 AND 60			15	4
5	COVER ASSY, HEAD, CIIIa RAM	1	→	→	C/O ITEMS 7, 13 AND 15 THRU 19			4	5
6	COVER ASSY, HEAD, CIIIb RAM	1	→	→	C/O ITEMS 7, AND 14 THRU 19			4	6
7	SUBSTRATE WELDMENT	1	→	→	C/O ITEMS 8 AND 4 OF ITEM 9, AND 2 OF ITEM 10			5	7
8	SUBSTRATE .075 THK	1	CRES	QQ-S-766	TYPE 316L, CONDTN A			5	8
9	RAIL, LOCKING	→	CRES	MIL-S-867	TYPE 316L QTY 20; 4 U/W ITEMS 7, 35 AND 43 NOTE 16			6	9
10	RAIL, PLAIN	→	CRES	MIL-S-867	TYPE 316L QTY 10; 2 U/W ITEMS 7, 35 AND 43 NOTE 16			6	10
11	CAMOF UNIT, MX11489/BPQ, ASSY NO. 11	1	→	→	C/O ITEMS 12,22,32,40,47,55-57 & 60			3	11
12	COVER ASSY, HEAD, CIIIC RAM	1	→	→	C/O ITEMS 7 AND 15 THRU 20			4	12
13	RAM (*) CIIIa .250 THK (REF)	AR	→	→	IAW REF 1 NOTE 24			4	13
14	RAM (*) CIIIb .125 THK (REF)	AR	→	→	IAW REF 1 NOTE 24			4	14
15	ADHESIVE	AR	→	COML	VERSILOK 506 RESIN NOTE 27			4	15
16	GLASS CLOTH	AR	→	COML	CLOTH NO 112 NOTE 25			4	16
17	PAINT, WASH PRIMER	AR	→	COML	CHEMGLAZE 9924 NOTE 27			4	17
18	PAINT, POLYURETHANE GRAY	AR	→	COML	A-471 CHEMGLAZE II NOTE 27			4	18
19	PAINT, POLYURETHANE BLACK	AR	→	COML	A-382 CHEMGLAZE II NOTE 27			4	19
20	RAM (*) CIIIC .310 THK (REF)	AR	→	→	IAW REF 1 NOTE 24			4	20
21	CAMOF UNIT SSIXS				C/O ITEMS 12, 22, 37, 50, 55-57 & 60			17	21
22	COVER ASSY OMNI ANT CLAMP CIIIC	1	→	→	C/O ITEMS 25 AND 15 THRU 20			7	22
23	COVER ASSY, OMNI ANT CLAMP, CIIIa	1	→	→	C/O ITEMS 25, 13 AND 15 THRU 19			7	23
24	COVER ASSY, OMNI ANT CLAMP, CIIIb	1	→	→	C/O ITEMS 25, AND 14 THRU 19			7	24
25	SUBSTRATE WELDMENT	1	→	→	C/O ITEMS 26 THRU 29			8	25
26	SUBSTRATE STRAP .060 THK	1	CRES	QQ-S-766	TYPE 316L, CONDTN A			8	26
27	RAIL, LOCKING	2	CRES	MIL-S-867	TYPE 316L NOTE 16			6	27
28	ANT CLAMP; FAIRING SUBSTRATE	1	CRES	MIL-S-867	TYPE 316L NOTE 16			8	28
29	ANT CLAMP; FAIRING SUBSTRATE	1	CRES	MIL-S-867	TYPE 316L NOTE 16			8	29
30									30
31									31
32	COVER ASSY, UPPER BARREL, CIIIC	1	→	→	C/O ITEMS 35 AND 15 THRU 20			9	32
33	COVER ASSY, UPPER BARREL, CIIIa	1	→	→	C/O ITEMS 35, 13 AND 15 THRU 19			9	33
34	COVER ASSY, UPPER BARREL, CIIIb	1	→	→	C/O ITEMS 35 AND 14 THRU 19			9	34
35	SUBSTRATE WELDMENT	1	→	→	C/O ITEMS 36, 4 OF ITEM 9 AND 2 OF ITEM 10			10	35
36	SUBSTRATE .060 THK	1	CRES	QQ-S-766	TYPE 316L, CONDTN A			10	36
37	COVER ASSY, MID BARREL, CIIIC	1	→	→	C/O 38 AND 15 THRU 20			9	37
38	SUBSTRATE WELDMENT	1	→	→	C/O 39, 4 OF 9, 2 OF 10			10	38
39	SUBSTRATE .060 THK	1	CRES	QQ-S-766	TYPE 316L, CONDTN A			10	39
40	COVER ASSY, MID BARREL CIIIC	1	→	→	C/O ITEMS 43 AND 15 THRU 20			9	40

41 CONTINUED ON SHEET 13

(*) "RAM" IS THE DESIGNATION FOR "RADAR ABSORPTION MATERIAL"

*	SOURCE
D	DESIGN YARD
F	FOLLOW YARD
P	NAVSECPHILADIV
N	NAVSHIPS FURNISHED

PARTS AND MATERIAL LIST

DRAWN _____

REVIEWED _____

SIZE	CODE IDENT	NAVSEA DRAWING NO.
B	25685	SS472 4491223

SCALE: ——— SHREV A B C E F SH 12

ITEM NO.	NAME 3 2 1 0	QTY	MATERIAL	SPEC	REMARKS AND/OR STOCK NO.	✳	NOTE 5	ON SHT	ITEM NO.
41	COVER ASSY, MID BARREL, CIIIa	1	→	→	C/O ITEMS 43,13 AND 15 THRU 19			9	41
42	COVER ASSY, MID BARREL, CIIIb	1	→	→	C/O ITEMS 43 AND 14 THRU 19			9	42
43	SUBSTRATE WELDMENT	→	→	→	C/O ITEMS 44, 4 OF ITEM 9, 2 OF ITEM 10, QTY 3, 1 U/W 48 OR 49			10	43
44	SUBSTRATE .060 THK	1	CRES	QQ-S-766	TYPE 316L, CONDTN A			10	44
45									45
46									46
47	COVER ASSY, LOWER BARREL CIIIC	1	→	→	C/O ITEMS 15 THRU 20 & 1 OF ITEM 43			9	47
48	COVER ASSY, LOWER BARREL, CIIIa	2	→	→	C/O ITEMS 13, 15 THRU 19 AND 1 OF ITEM 43 SEE NOTE 33			9	48
49	COVER ASSY, LOWER BARREL, CIIIb	2	→	→	C/O ITEMS 14 THRU 19 AND 1 OF 43 SEE NOTE 33			9	49
50	COVER ASSY, LOWER BARREL, CIIIC	1	→	→	C/O ITEMS 51 AND 15 THRU 20			9	50
51	SUBSTRATE WELDMENT	1	→	→	C/O ITEMS 52 AND 4 OF 9, 2 OF 10			10	51
52	SUBSTRATE	1	CRES	QQ-S-766	TYPE 316L, CONDTN A			10	52
53									53
54									54
55	BAND	AR	CRES	C404-316	NOTE 28			3	55
56	BUCKLE	61	CRES	C724-316	50 OF QTY U/W 60 NOTE 28			3	56
57	SKT SET SCR 5/16-18UNC-3A X .25L	61	NI-CU-AL	QQ-N-286	CLA, FF-S-200, TYPE 1, STYLE 4, 50 OF QTY U/W 60			3	57
58									58
59									59
60	KIT, SPARES	1	→	→	C/O ITEM 55 (1 ROLL, 100 FT L) AND 50 OF ITEMS 56 & 57 NOTE 8				60
61									61
62									62
63									63
64									64
65	BANDING TOOL MODIFICATION	1	→	→	C/O ITEMS 66 & 67			11	65
66	BANDING TOOL	1	→	C001	NOTE 28			11	66
67	HEX DRIVE	1	STEEL	QQ-S-637	AISI 1215 HEXAGONAL BAR			11	67
68									68
69									69
70	COVER ASSY, UPPER BARREL, CIIIa	1	→	→	C/O ITEMS 35, 13 AND 15 THRU 19			9	70
71	COVER ASSY, UPPER BARREL, CIIIb	1	→	→	C/O ITEMS 35, AND 14 THRU 19			9	71
72	SUBSTRATE WELDMENT	1	→	→	C/O ITEMS 36, 4 OF ITEM 9 AND 2 OF ITEM 10			10	72
73	SUBSTRATE .060 THK	1	CRES	QQ-S-766	TYPE 316 L, CONDTN A			10	73
74									74
75									75
76									76
77	COVER ASSY, MID BARREL, CIIIa	1	→	→	C/O ITEMS 43, 13 AND 15 THRU 19			9	77
78	COVER ASSY, MID BARREL, CIIIb	1	→	→	C/O ITEMS 43 AND 14 THRU 19			9	78
79	SUBSTRATE WELDMENT	→	→	→	C/O ITEMS 44, 4 OF ITEM 9, 2 OF ITEM 10, QTY 3, 1 U/W 48 OR 49			10	79
80	SUBSTRATE .060 THK	1	CRES	QQ-S-766	TYPE 316 L, CONDTN A			10	80

✳	SOURCE
D	DESIGN YARD
F	FOLLOW YARD
P	NAVSECPHILADIV
N	NAVSHIPS FURNISHED

PARTS AND MATERIAL LIST

DRAWN _____

REVIEWED _____

SIZE	CODE IDENT	NAVSEA DRAWING NO.
B	25685	SS 472 4491223

SCALE: ——— SHREV A B D E F SH 13

13. WHERE THIS NOTE IS REFERENCED, THE NOTED DIMENSION MUST BE ACHIEVED WHEN THE ITEM IS CLAMPED AROUND A GAUGE OF 7.490 TO 7.500 DIAMETER AND FASTENERS ARE ASSEMBLED IAW REFERENCE 2 AND TENSIONED AND TORQUED IAW NOTE 29.

14. APPLY TWO LAYERS OF GLASS CLOTH, ITEM 16, IAW REF 1, TO RAM AS SHOWN TO PREVENT RAM ENDS FROM PULLING AWAY FROM SUBSTRATE.

15. FULL WELD PENETRATION NOT REQUIRED, EXCEPT WELDS MUST BE CONTINUOUS ALL AROUND.

16. PART TO BE INVESTMENT CAST PER MIL-C-6021, CLASS 2B, GRADE D, OR MACHINED FROM CRES 316L WITH A MINIMUM YIELD STRENGTH OF 42 PSI.

17. FILLET RADII TO BE .04 TO .07.

18. ALL OUTSIDE EDGES SHOWN SHARP SHALL BE .050 RADIUS MAXIMUM.

19. PARTS TO BE ANNEALED AND SOURCE STRAIGHTENED.

20. TRIM PIECE TO LENGTH AT ASSY.

21. ALL SURFACES SHALL BE SANDBLASTED, USING DRY SILICA, AFTER ALL MACHINING AND WELDING. SANDBLAST PROCESS IS TO PRECEDE PASSIVATION DESCRIBED IN NOTE 22.

22. PASSIVATE AFTER SANDBLAST PER MIL-S-5002.

23. INSTALL FASTENER DEVICE IN ACCORDANCE WITH INSTRUCTION IN REFERENCE 2 AND THE REQUIREMENTS OF NOTE 29.

24. BOND RAM TO SUBSTRATE AS INDICATED IN ACCORDANCE WITH REFERENCE 1, USING ADHESIVE, ITEM 15.

25. ALL EXPOSED RAM EDGES TO BE COVERED WITH FIBERGLASS (2 PLYS) PER REFERENCE 1.

26. PAINT ALL SURFACES OF ASSEMBLY, INSIDE AND OUT, WITH ITEMS 17, 18, AND 19 IN ACCORDANCE WITH REFERENCE 1. PRIOR TO PAINTING, MASK OFF THE IDENTIFICATION MARKINGS ON INSIDE SURFACE OF SUBSTRATE.

27. MATERIAL IS SUPPLIED BY HUGHSON CHEMICALS, LORD CORPORATION, ERIE, PENNSYLVANIA 16512 (CODE IDENT 76005), OR EQUAL.

28. MATERIAL IS SUPPLIED BY BAND-IT COMPANY, 4799 DAHLIA STREET, DENVER, COLORADO 80216.

29. APPLY TENSION TO BAND, ITEM 55, BY TORQUING HEX DRIVE OF BANDING TOOL, ITEM 65, TO 50 INCH-POUNDS MAXIMUM. MAINTAIN TENSION AND TIGHTEN BUCKLE SET SCREW, ITEM 57, TO 78 INCH-POUNDS MAXIMUM.

30. F-6 / H-6 — ALL DETAILS, SECTIONS, TABLES, ETC. ARE IDENTIFIED BY LABELS SUCH AS F-6 (DETAIL F ON SHEET 6). SUBLABELS REFER TO RELATED VIEWS, TABLES ETC., SUCH AS H-6 (VIEW H ON SHEET 6).

31. WHERE THIS NOTE IS REFERENCED GRIND SMOOTH WELDED SURFACE

32. ALL PHASES OF WELDING SHALL BE AS REQUIRED BY NAVSEA S9086-CH-STM-010, CH 074 VOL 1 AND MIL-STD-278 WHICH INVOKES THE FOLLOWING SPECIFICATIONS: (A) MIL-STD-248-QUALIFICATION TEST FOR WELDERS. (B) MIL-STD-271-NON-DESTRUCTIVE TESTING OF WELDS. (C) NAVSHIPS 0900-003-8000-SURFACE INSPECTION ACCEPTANCE STANDARDS FOR METALS. (D) NAVSHIPS 0900-003-9000 RADIOGRAPHIC STANDARDS FOR PRODUCTION AND REPAIR OF WELDS. (E) MIL-STD-1688 (SH) FABRICATION WELDING AND INSPECTION OF HY-80 SUBMARINE HULLS.

33. ONLY ONE PIECE IS REQUIRED FOR 688 CLASS SUBMARINES. ADDITIONAL PIECES SHOULD BE RETURNED TO NAVSSES CODE 061C.

34. ITEM NO 11 CAN BE USED IN EITHER THE ATLANTIC OR PACIFIC FLEET AND THEREFORE IS THE MOST DESIRABLE CONFIGURATION.

35 RCS TESTING IS TO BE ACCOMPLISHED IAW REF 4. REFERENCE 5 PROVIDES ACCEPTANCE CRITERIA.

GENERAL NOTES
(CONTINUED FROM SHEET 2)

DRAWN
REVIEWED

SIZE	CODE IDENT	NAVSEA DRAWING NO.		
B	25685	SS	472	4491223
SCALE: —		SHREV A B C D E		SH 14

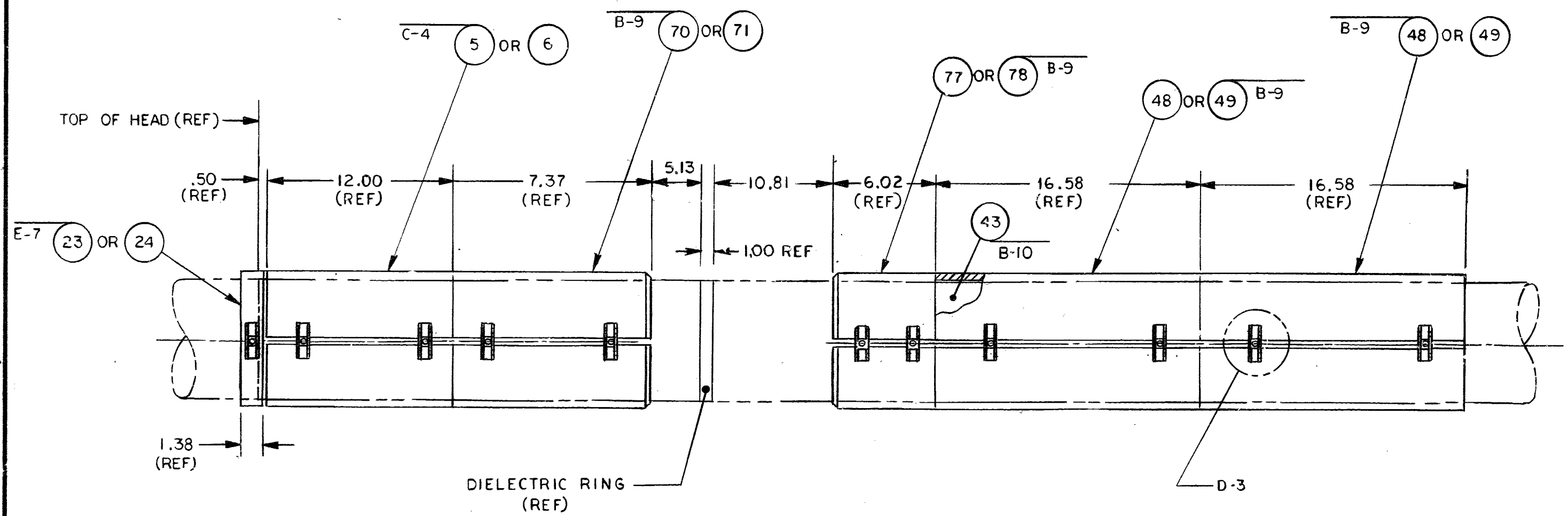

A-15

APPLICABILITY
SSN 623 ONLY

SSIXS ANT. MOD TYPE 18 PERISCOPE CAMOUFLAGE UNIT INSTALLATION ASSEMBLY 3 AND 4	DRAWN	SIZE	CODE IDENT	NAVSEA DRAWING NO.	
	REVIEWED	B	25685	SS 472 4491223	
		SCALE: NONE		SHREV B	SH 15

REVISIONS

REV	DET SH	DESCRIPTION	DATE	APPD
A	—	ORIGINAL ISSUE PER SEF 82278 TASK		
B	2	1. INDEX; ADDED SHEET 15, CHANGE REVISION SHEET TO 16 2. REFERENCES; ADDED REFERENCE NO.3		
	3	3. ADDED APPLICABILITY NOTE		
	5,8, 10,14	4. ADDED GRINDING SYMBOL AND NOTE 31 TO WELD DESIGNATION THRU OUT DWG.		
	9	5. B-9 & C-9; ADDED ASSEMBLY NO 70,71,77&78		
	10	6. TABLE C-10; ADDED ITEM NOS 72&79		
	12	7. ADDED ITEM NO 3,4 & FSN TO ITEMS 1&2		
	13	8. ADDED ITEM NO 70 THRU 73 & 77 THRU 80	2/26/85	DMB
	14	9. ADDED GENERAL NOTE 31	3/5/85	
		AUTH: RHO. 091683 TASK	2/19/85	SEJ
C	2	1. DELETED NOTE 6 AND REPLACED WITH NOTE 32 THRU-OUT DRAWING.		
	4 & 9	2. A-4 & A-9: .500 MAX WAS .510/.490 MAX.		
	5	3. F-5: .50 (REF) DIM RELOCATED TO TOP OF SUBSTRATE.		
	12	4. ITEM 19: A-382 WAS A-371.		
		AUTH: JEO 042486 TASK	7/2/86 5/20/86	GH SEJ
D	14	1. ADDED NOTE 33 AND MODIFIED NOTES 14 & 16		
	3,9 & 13	2. ADDED (SEE NOTE 33) AT ITEMS 48 & 49		
	2	3. CHANGED TITLE & DWG Nº OF REFERENCE 1		
	3	4. ADDED SUBSTRATE NOTE AT B-3		
		AUTH: RHO 121587 TASK	1/29/92 1/20/88	DH SEJ
E	1	1 ADDED MX11489/BPQ TO THE TITLE BLOCK.		
	2	2 ADDED REFERENCES 4 AND 5.		
	3	3 ADDED ITEM 20 TO DETAIL A-3, 2 PLACES. ADDED ITEMS 12, 22, 32, 40 & 47 TO DETAIL B-3. ADDED ASSY 11 TO TABLE C-3.		
	4	4 ADDED ITEMS 12 & 20 TO DETAIL C-4.		
	6	5 DETAILS A-6 & D-6, DIMENSIONS .100; .080 WAS .160; .140. DETAIL F-6 DIMENSIONS .17; .11 WERE .23; .17.		
	7	6 ADDED ITEMS 20 & 22 TO DETAIL E-7.		
	9	7 ADDED ITEMS 32, 40 & 47 TO TABLE C-9. ADDED ITEMS 20, 32, 40 & 47 TO DETAIL B-9		
	12	8 ADDED ITEMS 11, 12, 20, 22, 32 & 40 TO L\M.		

REVISIONS

REV	DET SH	DESCRIPTION	DATE	APPD
E	13	9 ADDED ITEM 47 TO L/M		
	14	10 ADDED NOTES 34 & 35.		
	2	11 DELETED PART OF NOTE 5. DRAWING WAS CHANGED TO INCLUDE NEW TRIPLEBAND RAM KIT	9/2/92	SEJ
F	1	1. UPDATED DISTRIBUTION LIST		
	2	2. ADDED SHT 17 TO INDEX		
	9	3. ADDED ITEMS 37, 38, 50 & 51 IN B-9 4. ADDED ITEMS 37 & 50 IN TABLE C-9	2/24/97	BHK
	10	5. ADDED ITEMS 38, 39, 51 & 52 IN B-10 6. ADDED ITEMS 38 & 50 IN TABLE C-10		
	12	7. ADDED ITEMS 21, 37, 38, & 39 TO P/L		
	13	8. ADDED ITEMS 50, 51 & 52 TO P/L		
	17	9. ADDED SHEET 17		

CONTINUED ON SHEET

REVISIONS

SIZE	CODE IDENT	NAVSEA DRAWING NO.			
B	25685	SS	472	4491223	
SCALE: ——		SHREV A B C D E F			SH 16

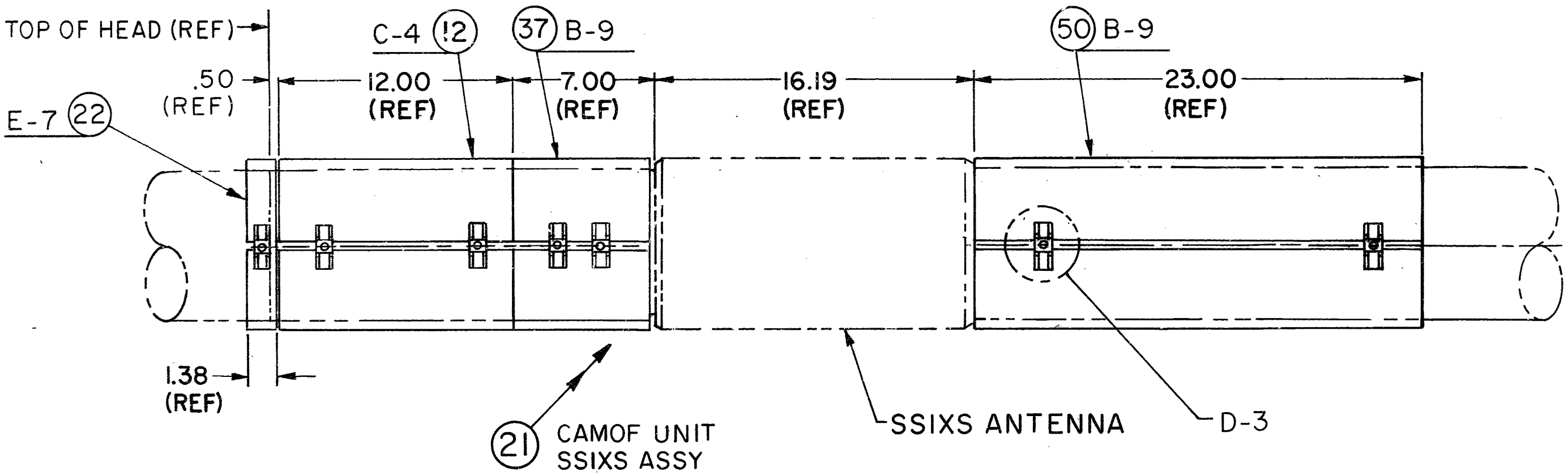

A-17

F9

TABLE B17			
ASSY NO.	CAMOF UNIT DES	RAM DES	RAM THICKNESS
21	SSIXS	C III C	.310

SSIXS ANTENNA CAMOUFLAGE UNIT INSTALLATION ASSEMBLY

DRAWN NDI

REVIEWED

B	25685	SS	472	4491223
SCALE: 3/16 = 1"		SH REV		SH 17

DISTRIBUTION LIST

ACTIVITY CODE	KIND	QUANTITY (REVISION → F)
SUPSHIPS GROTON CODE 273	D	1
SUPSHIPS NPTNWS CODE 254C	D	1
SHIPYD GD/EB GROTON, D-403	D	1
SHIPYD NPTNWS SHIPBLDG, DEPT E-75	S	1
NAVSHIPYD NORF CODE 202.2	D	1
NORFOLK COMBAT SYSTEMS	D	1
NAVSHIPYD PEARL CODE 244.51	D	1
NAVSHIPYD PTSMH CODE 280.6	S	1
NAVSHIPYD PTSMH CODE 280.7	S	1
NAVSHIPYD PUGET CODE 203.3	D	1
NAVSEA PMS 393 (A24)	D	1
NAVSEA PMS 401	D	1
NAVSEA PMS 4257	D	1
SPAWAR PMW 173	D	1
COMSUBLANT CODE N4073	D	1
COMSUBPAC CODE N422	D	1
TRIREFITFAC CODE 454	D	1
TRIREFITFAC CODE 424	D	1
NAVSUBSUPPFAC NEW LONDON CODE 768	D	1
NAVIMFAC PEARL HARBOR	D	1
NAVSHIPREPFAC YOKOSUKA CODE 240C	D	1
SUBMARINE TENDERS	D	4
SUBMEPP 1843	D	1
SUBMEPP 1863.L	D	1
NAVICAP CODE 0543	D	1
DSC RICHMOND CODE JBTC	D	1
NISE EAST DET CODE 371DW	D	1
NRAD CODE 7705	D	1
NUWC CODE 3432 (PERISCOPE)	D	1
NUWC CODE 3493 (ANTENNA)	D	1
NAVSURFWARFARECTR 20D11	S	1
NSWCCD-SSES 9615	D	8
NSWCCD-SSES 96TDC	S	1
NSWCCD-SSES 96TDC	D	2
TOTALS: SILVER HALIDE APERTURE CARD *	S	5
TOTALS: DIAZO APERTURE CARD *	D	40
TOTALS: VANDIKE/SEPIA	V	-
TOTALS: BLUEPRINT/BLUELINE	B	-

DATE AUTHORIZED — MM 02, DD 26, YY 97

* MICROFILM SHALL BE IN ACCORDANCE WITH MIL-M-9868 TYPE 1, CLASS 1, FOR SILVER HALIDE AND TYPE II, CLASS 2 FOR DIAZO. 35 MM MICRO REPRODUCTION SHALL BE MOUNTED ON STANDARD TABULATING APERTURE CARDS WITH FORMATS AND CODING IN ACCORDANCE WITH THE LATEST ISSUE OF MIL-STD-804.

-4491223-

THIS PLAN HAS BEEN MICRO-FILMED AT PHILADELPHIA NAVAL SHIPYARD AND APERTURE EAM CARD AREPART D FOR FILE.

MICROFILM RECORD STAMP HERE

TOTAL	
ASSY	LB WT

{ ☐ CALCULATED ☐ ACTUAL

CENTER OF GRAVITY { ☐ CALCULATED ☐ ACTUAL

DIMENSIONAL TOLERANCES & SURFACE FINISH — UNLESS OTHERWISE SPECIFIED

DECIMALS √		FRACTIONS √		WELDMENTS		CASTINGS	
PLACES	± TOL	DIMENSION	± TOL	DIMENSION	± TOL	DIMENSION	TOLERANCE
.XXX	.005	< 6"	1/64	< 24"	.062	< 2"	+1/16 −1/16
.XX	.02	6" TO 24"	1/32	≧ 24"	.126	2" TO 5"	+3/32 −1/16
.X	.1	≧ 24"	1/16	ALL PLASTICS		5" TO 8"	+1/8 −3/32
← WHOLE NUMBERS ARE TOL ± .1 →				CONDITION	± TOL	8" TO 12"	+3/16 −1/8
				MACHINED	.010	12" TO 15"	+1/4 −3/16
				MOLDED	.035	≧ 15"	+1/4 −1/4

(√) MACHINED SURFACE FINISHES = 125 MUIN (AA). BREAK ALL SHARP EDGES .01 TO .02 ALL ANGLES: ±0°30' MATERIAL SPECIFICATION TOLERANCES APPLY TO STOCK SIZES. THREAD DIMENSIONS AND DESIGNATIONS TO BE IN ACCORDANCE WITH NATIONAL BUREAU OF STANDARDS HANDBOOK H-28 AND MIL-STD-9, RESPECTIVELY. UNLESS OTHERWISE SPECIFIED, ALL DIMENSIONS ARE IN INCHES AND FEATURES ARE SYMMETRICAL ABOUT ℄. AMERICAN NATL STD ANSI Y14.5 IS INVOKED WHERE APPLICABLE. TORQUE: ±10%.

OFFICIAL	SIGNATURE	DATE
ENGINEERING BR HD	J.H. Sullivan	9-8-78
FIELD SVCE BR HD	W.C. Burns	9-8-78
MATL MGT BR HD	[illegible]	9-8-78
TEST EVLTN BR HD	G. [illegible]	9-7-78
CONTIG MGR	[illegible]	9-7-78
DESIGN SECT HD	[illegible]	9-7-78
PROJ COORD	[illegible]	9/7/78
CHECKER	SEF	9-1-78
DRAFTSMAN	NDI	08-22-78
DEPT HD	[illegible]	9-7-78 DATE

NAVAL SHIP ENGINEERING CENTER
PHILADELPHIA DIVISION (SAED)
NAVAL BASE, PHILADELPHIA, PENNA., 19112

RADAR CAMOUFLAGE UNITS FOR TYPE 18 PERISCOPE; MX-9997/BPQ, MX-9998/BPQ AND MX 11489/BPQ

TYPE 18 PERIS RDR CAMOF UNIT

SIZE	CODE IDENT	NAVSEA DRAWING NUMBER			REV
B	25685	SS	472	4491223	F

SCALE: NOT TO BE SCALED — SHEET 1 OF 17

INDEX

SHT NO	TITLE	REV
1.	COVER SHEET	E
2	INDEX, REFERENCE AND GENERAL NOTES	E
3	CAMOF UNIT, TYPE 18 PERISCOPE, ASSY 1 AND 2	E
4	COVER ASSY, PERISCOPE HEAD	E
5	SUBSTRATE WELDMENT, PERISCOPE HEAD	C
6	RAILS, LOCKING AND PLAIN	E
7	COVER ASSY, OMNI ANTENNA CLAMP	E
8	SUBSTRATE WELDMENT, OMNI ANT, AND FAIRING SUBSTRATE ANT CLAMP	C
9	COVER ASSEMBLIES; UPPER, MID AND LOWER BARREL	E
10	SUBSTRATE WELDMENT, UPPER, MID AND LOWER BARREL	C
11	BANDING TOOL MODIFICATION AND HEX DRIVE	A
12,13	PARTS AND MATERIAL LIST	E
14	GENERAL NOTES (CONTINUED)	E
15	SSIXS MOD TYPE 18 PERISCOPE, ASSY 3 AND 4	B
16	REVISIONS	E
17	CAMOF UNIT, SSIXS	F

REFERENCES

NO	TITLE	CODE IDENT	NUMBER
1	REPAIR & PAINTING OF RCU COMPONENTS/CLOSURE CAP	25685	0900-01-016-9025
2	PROC FOR INSTALLATION & REMOVAL OF RCSR KIT	25685	0900-016-9050
3	PERISCOPE & ANT. RCSR TOOLING KIT	53711	SS-499-5361659
4	RADAR CROSS SECTION MEASUREMENT PROC		0900-LP-024-8000
5	RCS ACCEPTANCE CRITERIA		NUWC C3413/7252-57

GENERAL NOTES:

1. THIS DRAWING IS DEVELOPED FROM TELEDYNE - MICRONETICS DRAWINGS OF THE CAMOUFLAGE UNIT FOR THE MX9997/BPQ & MX9998/BPQ TYPE 18 PERISCOPE, AND REFLECTS ALL DATA COLLECTED FROM THE LATEST REVISIONS OF THOSE DRAWINGS.
2. INTERPRETATION OF THIS DRAWING SHALL BE IAW THE FOLLOWING STANDARDS FOR ENGINEERING DRAWING PRACTICES: MIL-STD-100, USASI Y14.5, AND ASA B46.1.
3. THE APPLICABLE REVISION TO SPECIFICATIONS CITED HEREIN SHALL BE CONSIDERED THAT REVISION IN EFFECT ON ANY GIVEN DATE OF THIS DRAWING'S APPLICATION, UNLESS OTHERWISE SPECIFIED.
4. SUBSTITUTION IS NOT PERMISSIBLE WITHOUT WRITTEN PERMISSION OF NAVSEA. SUBST SO AUTHORIZED WILL BE REFLECTED ON SHIPS PLAN WITH AUTHORITY REF.
5. ~~MATERIAL IDENTIFICATION AND CONTROL REQUIREMENT:~~ THE IDENTITY OF MATERIALS SHALL BE VERIFIED BY MEANINGFUL VISUAL OR ACID AND HARDNESS TESTS AS A MINIMUM. AFTER VERIFICATION, ALL FASTENERS SHALL BE COLOR CODED BY SOME DISTINCTIVE COLOR ~~(NOT IN CONFLICT WITH NAVSHIPS 0948-045-7010)~~ FOR EASE OF RECOGNITION. [1] [E] [B1] [B1] [F2]
6. ~~ALL WELDING AND INSPECTION OF WELDING SHALL BE IAW REQUIREMENTS OF THE GEN SPEC FOR SHIPS OF THE U.S. NAVY NAVSHIPS 0902-001-5000.~~ [C]
7. PASSIVATE ALL CRES PIECES AFTER WELDING AND MACHINING IS COMPLETED.
8. MARKING AND IDENTIFICATION SHALL BE IN ACCORDANCE WITH MIL-STD-130. [D3]
9. PROCUREMENT DOCUMENTS WHICH REFERENCE THIS DRAWING WILL SPECIFY THE APPLICABLE "ASSEMBLY NUMBER" AS LISTED IN MATERIAL LIST OF THIS DRAWING. [B2] [E2]
10. ID NO (IDENTIFICATION NUMBER): WHERE THIS NOTE IS REFERENCED: THE ID NO SHALL BE PERMANENTLY INSCRIBED IN THE AREA INDICATED BY THE RECTANGLE ON THE DETAIL. A BROKEN RECTANGULAR OUTLINE INDICATES FAR SIDE SURFACE. AN ARROW INDICATES LEFT TO RIGHT READING. THE ID NO SHALL CONSIST OF THREE PARTS SEPARATED BY A DASH AS IN THE FOLLOWING EXAMPLE: 4491223-A-1. PART ONE, "4491223" IS THE LAST SEVEN DIGITS OF THIS DRAWING NUMBER. PART TWO, "A" IS THE REVISION LETTER AS GIVEN IN TITLE BLOCK ON SHEET ONE OF THIS DRAWING. PART THREE, "1" IS THE ITEM NUMBER FROM THE L/M OR AS SPECIFIED BY THE PROCUREMENT CONTRACT.
11. WHERE THIS NOTE IS REFERENCED THE MINIMUM FILLET WELD SIZE TO BE EQUAL TO THINNEST MATERIAL THICKNESS INVOLVED.
12. WHERE THIS NOTE IS REFERENCED, CHECK NOTED DIMENSIONS WHEN PART IS INSTALLED ON TOOL, AND FASTENERS ARE ASSEMBLED IAW REFERENCE 2 AND TENSIONED AND TORQUED IAW NOTE 29.

GENERAL NOTES CONTINUED ON SHEET 14

INDEX, REFERENCES & GENERAL NOTES	DRAWN	SIZE	CODE IDENT	NAVSEA DRAWING NO.		
	REVIEWED	B	25685	SS	472	4491223
		SCALE: —		SHREV A B C D E F		SH 2

N27200-A

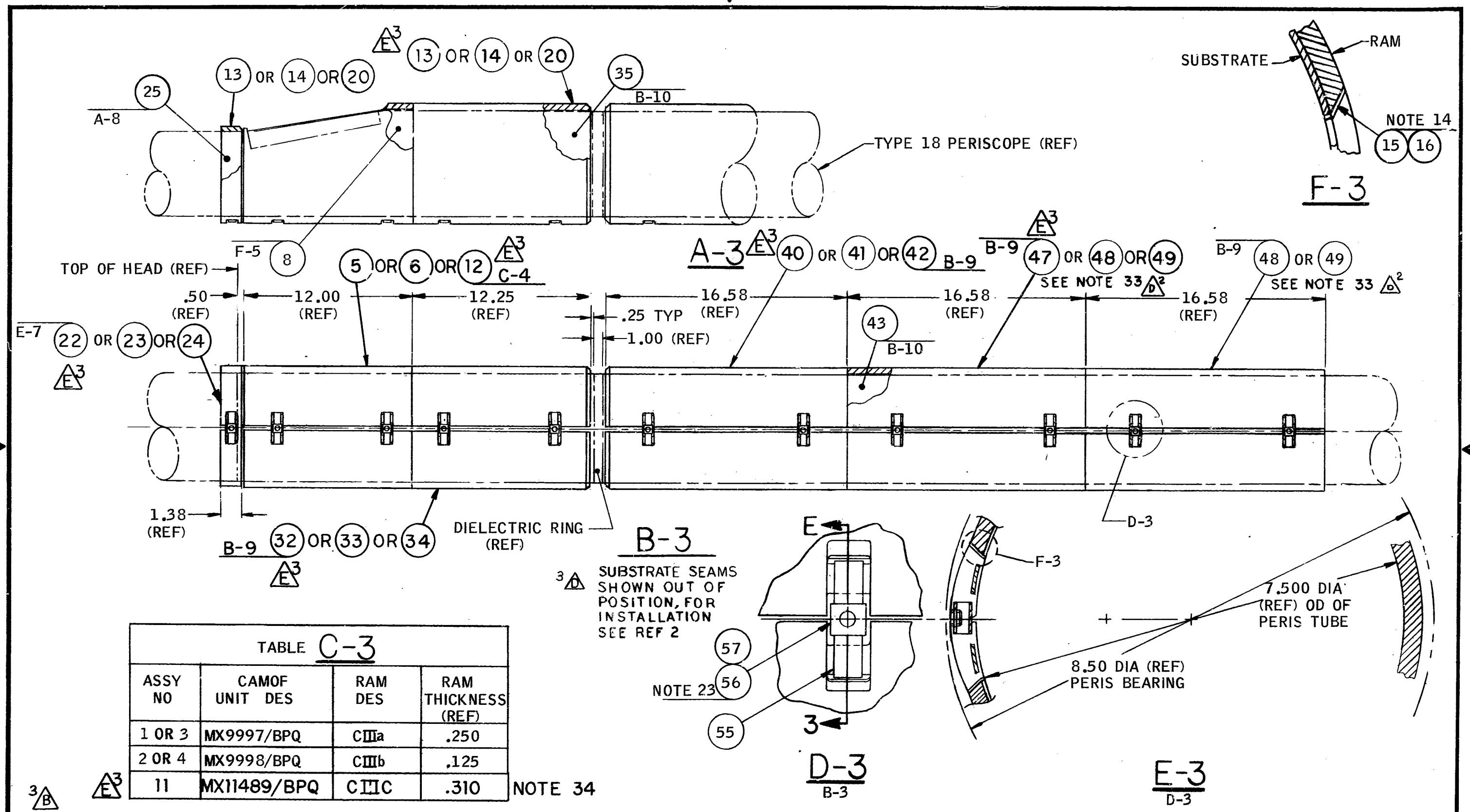

TABLE C-3

ASSY NO	CAMOF UNIT DES	RAM DES	RAM THICKNESS (REF)
1 OR 3	MX9997/BPQ	CIIIa	.250
2 OR 4	MX9998/BPQ	CIIIb	.125
11	MX11489/BPQ	CIIIC	.310

NOTE 34

TYP 637 CL. INSTALLATION FOR SSN 623 SEE SHT 15

TYPE 18 PERISCOPE CAMOUFLAGE UNIT INSTALLATION, ASSEMBLY 1 AND 2

DRAWN

REVIEWED

SIZE	CODE IDENT	NAVSEA DRAWING NO.
B	25685	SS 472 4491223
SCALE: NONE		SH REV A B D E SH 3

127200--A

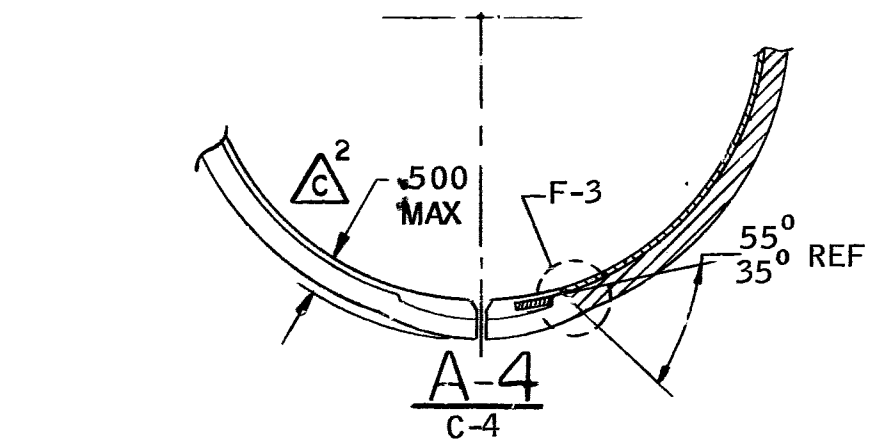

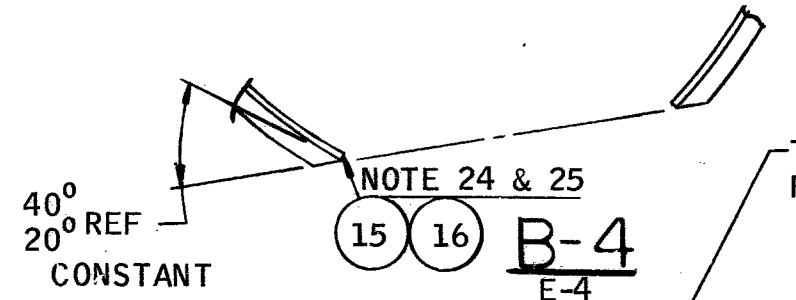

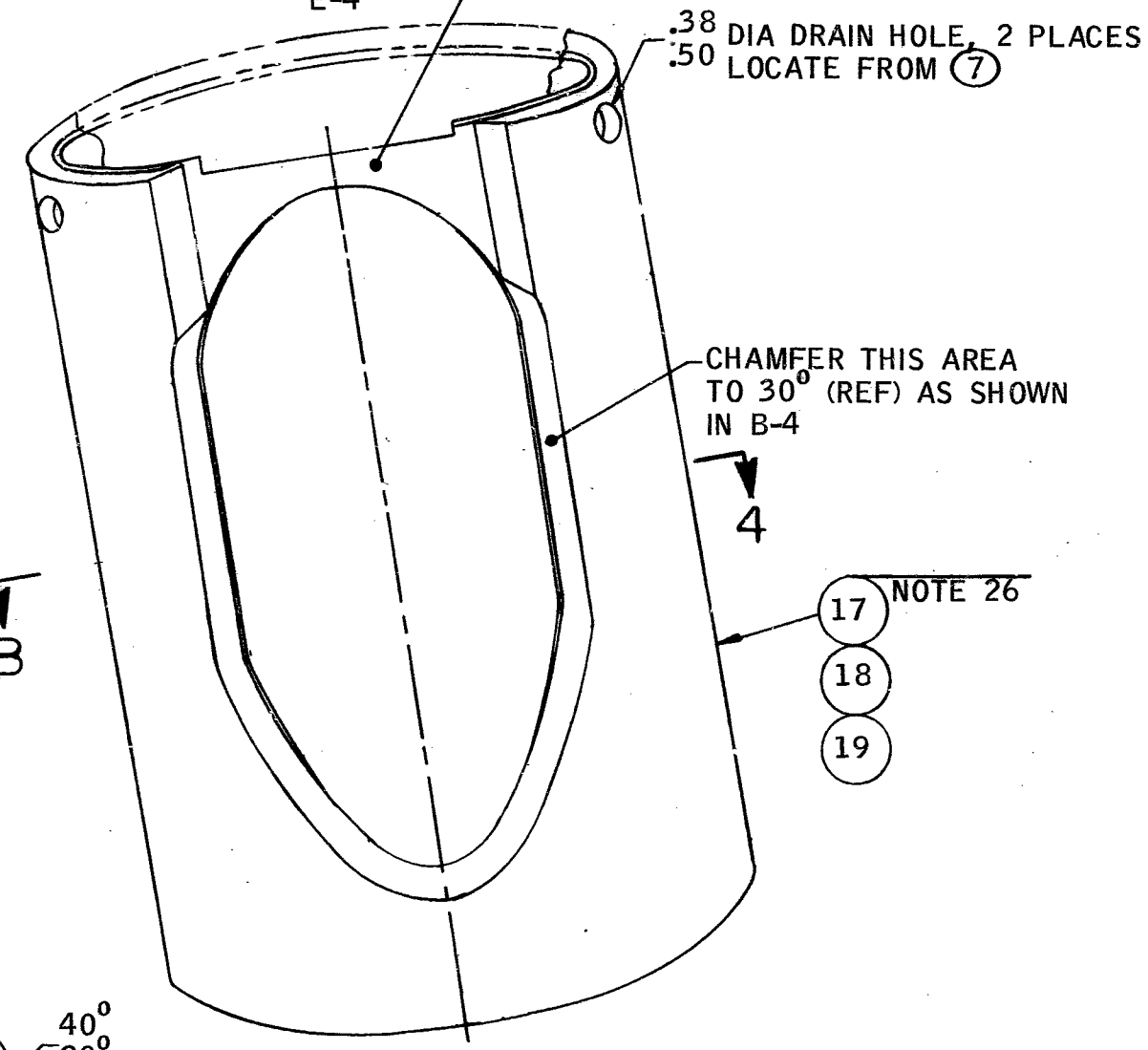

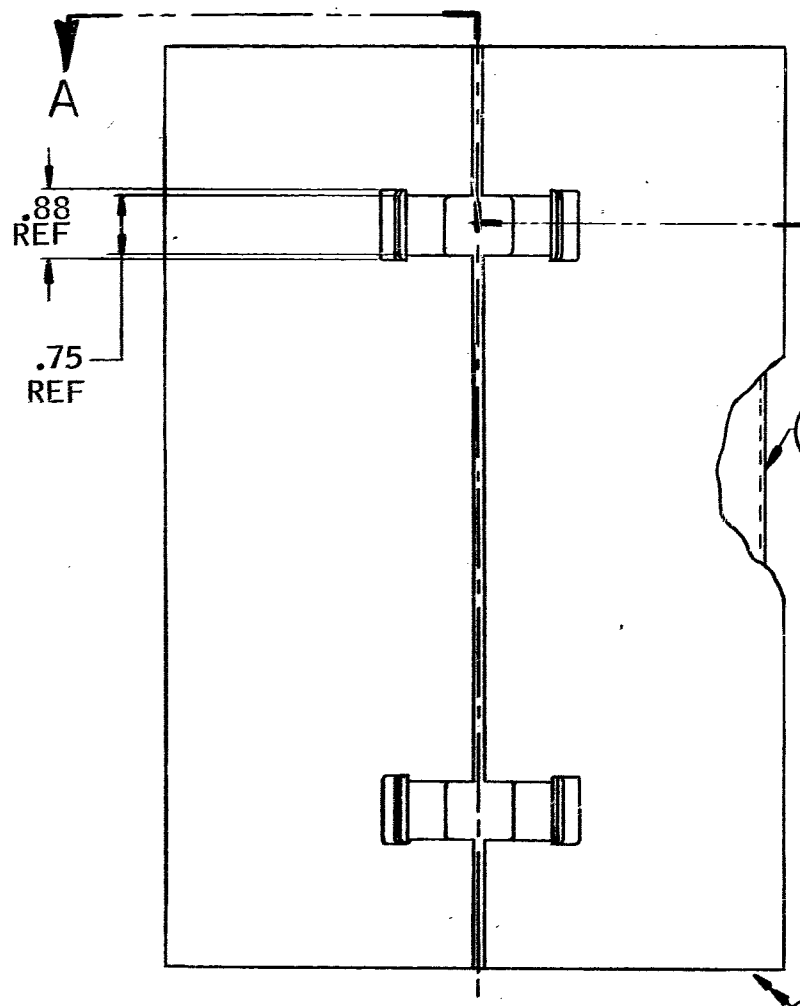

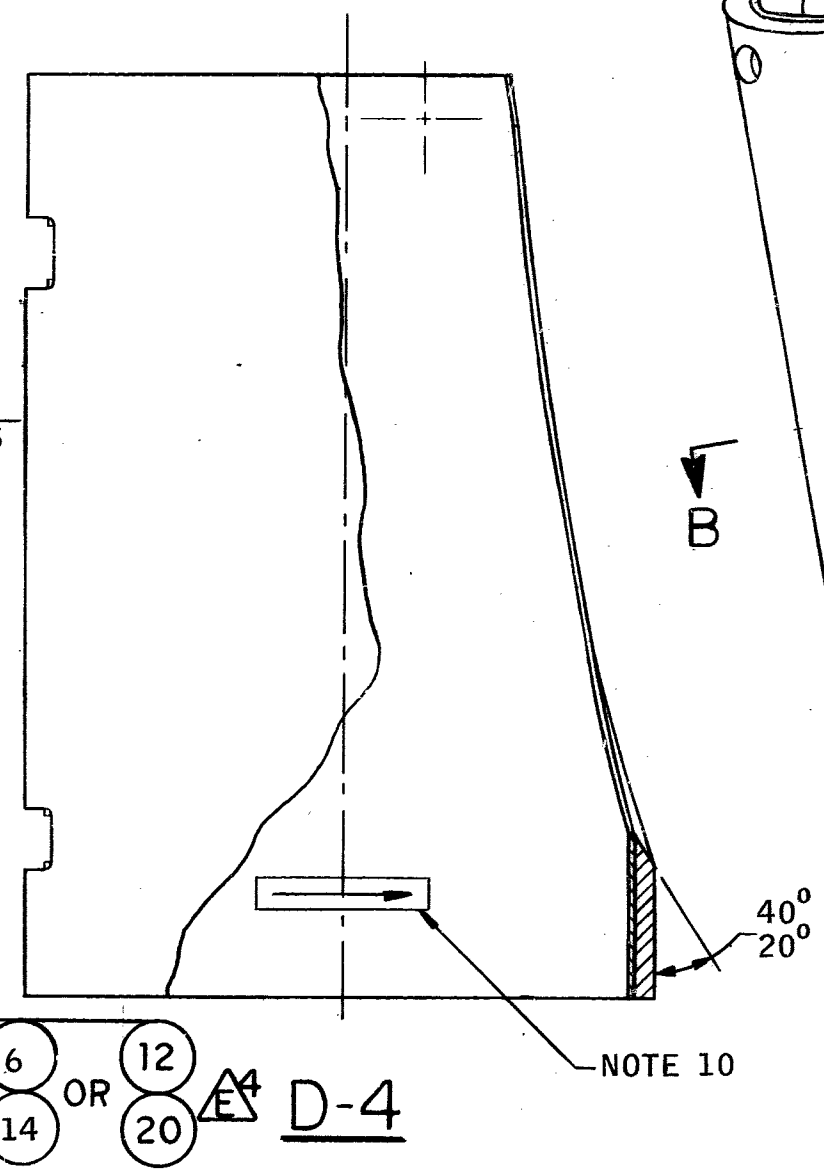

PERISCOPE HEAD COVER ASSY	DRAWN _____ REVIEWED _____	SIZE	CODE IDENT	NAVSEA DRAWING NO.		
		B	25685	SS	472	4491223
		SCALE: NONE		SH REV A C E		SH 4

127200--A

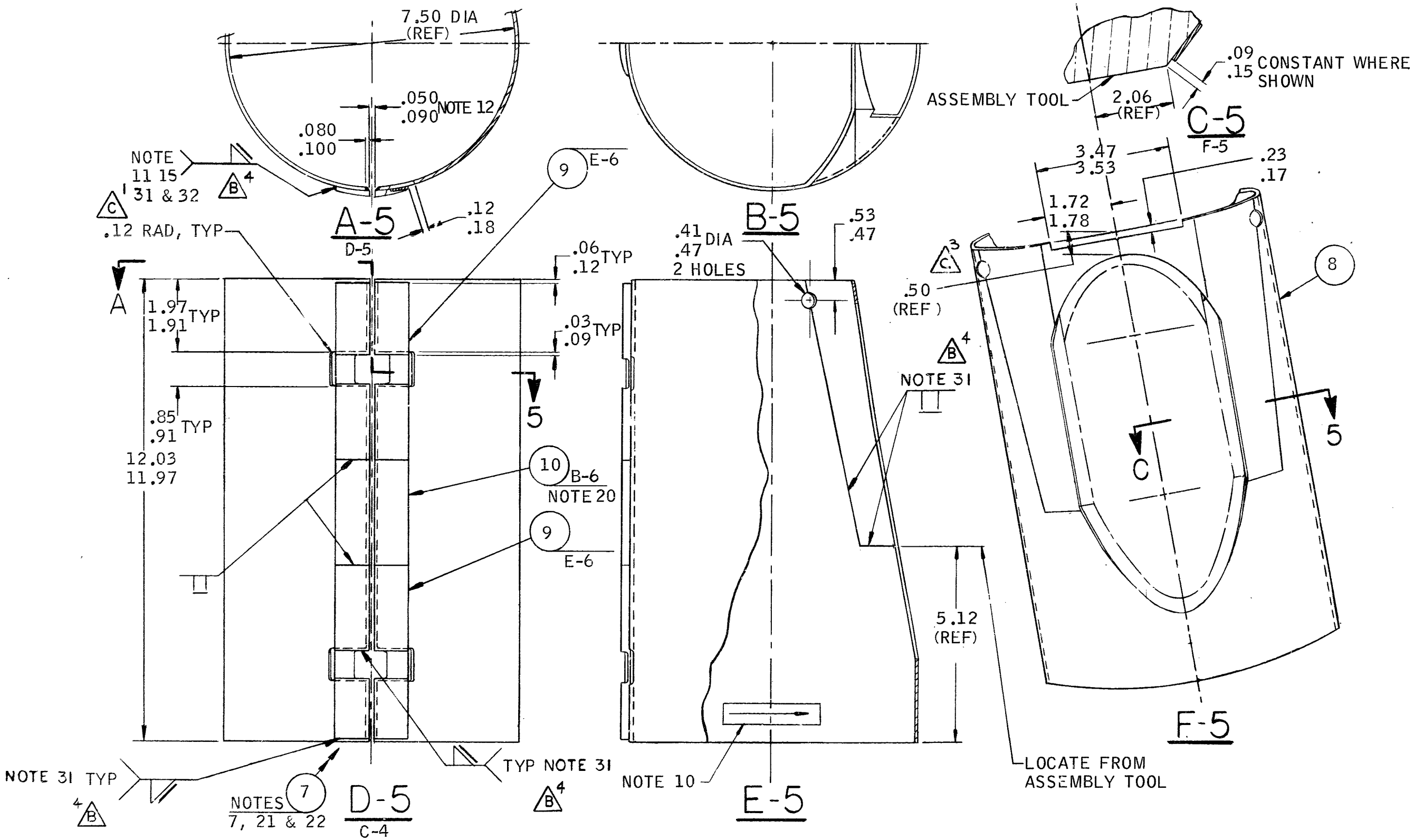

PERISCOPE HEAD SUBSTRATE WELDMENT	DRAWN	SIZE	CODE IDENT	NAVSEA DRAWING NO.
	REVIEWED	B	25685	SS 472 4491223
		SCALE: NONE	SH REV A B C	SH 5

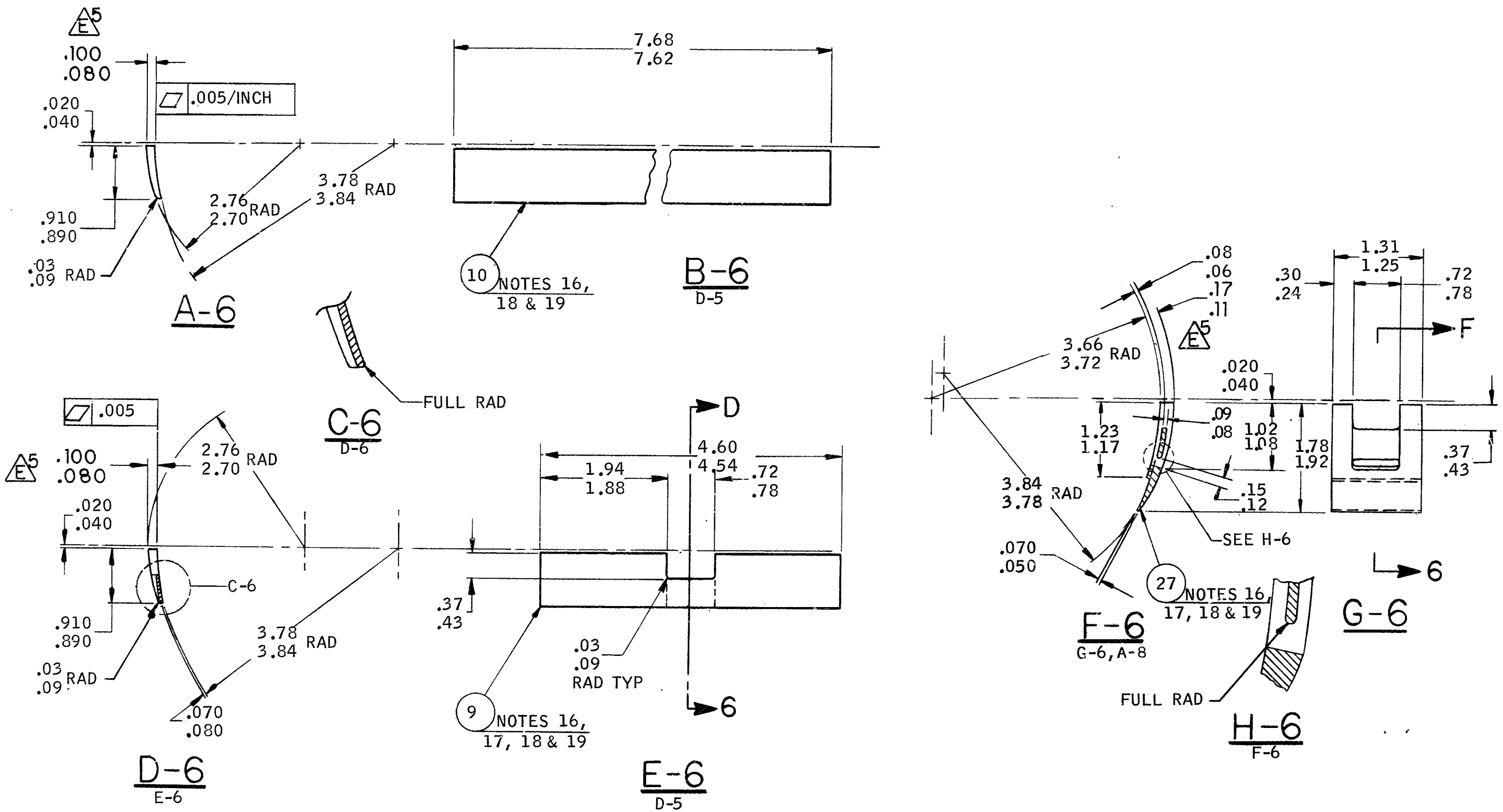

LOCKING AND PLAIN RAILS	DRAWN	SIZE	CODE IDENT	NAVSEA DRAWING NO.		
	REVIEWED	B	25685	SS	472	4491223
		SCALE: NONE		SH REV A E		SH 6

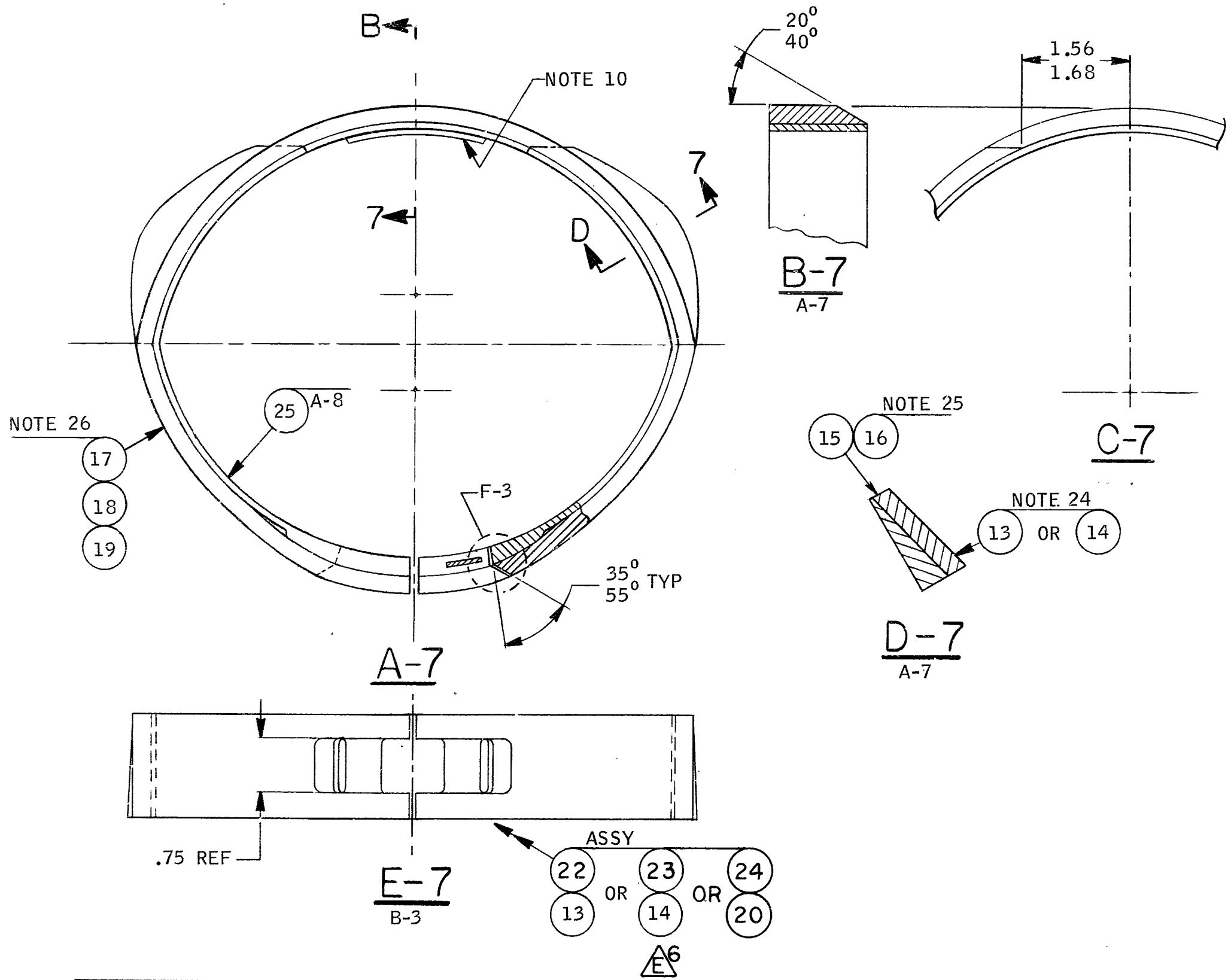

OMNI ANTENNA CLAMP COVER ASSY	DRAWN	SIZE	CODE IDENT	NAVSEA DRAWING NO.
	REVIEWED	B	25685	SS 472 4491223
		SCALE: NONE	SH REV A E	SH 7

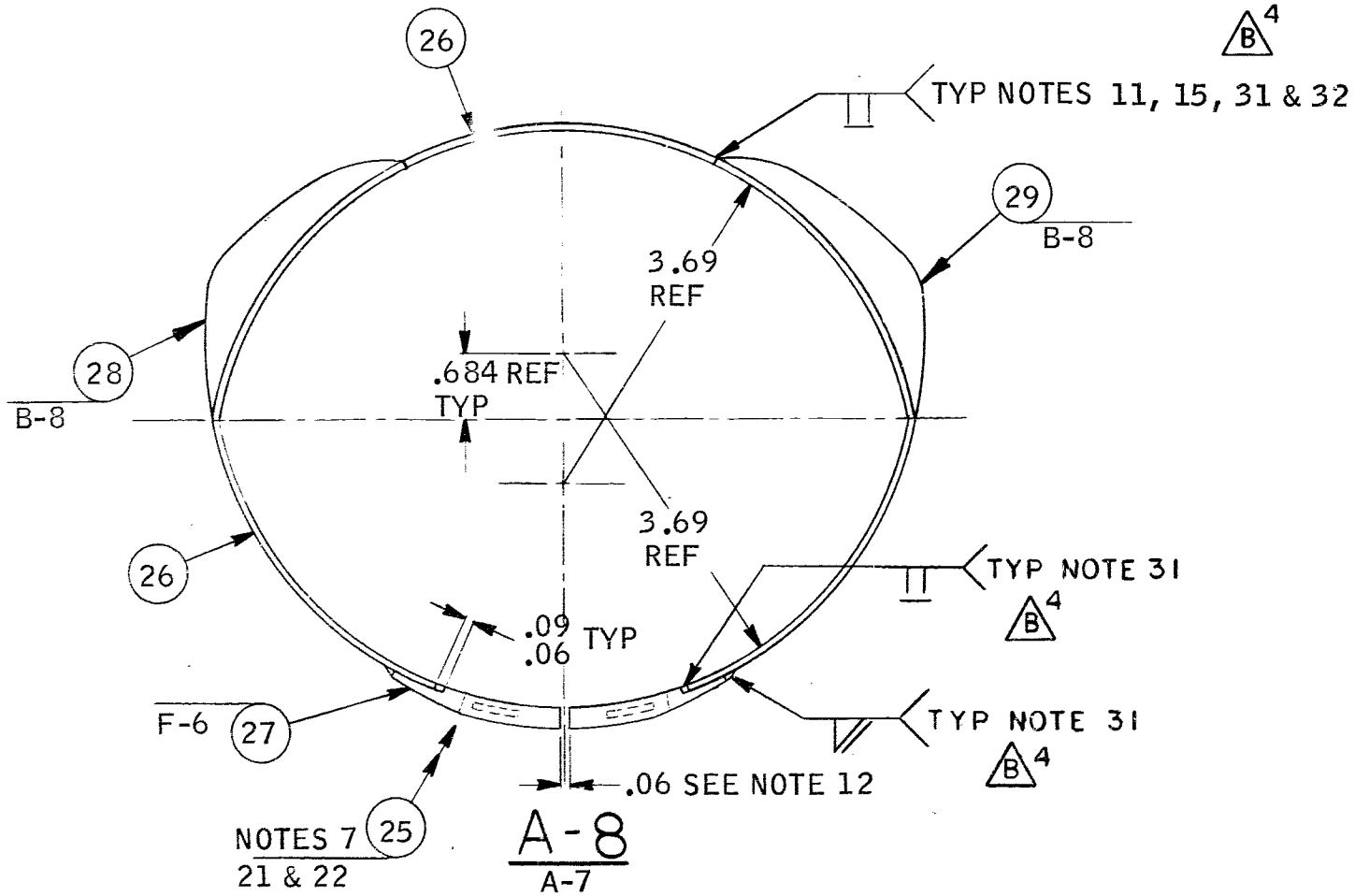

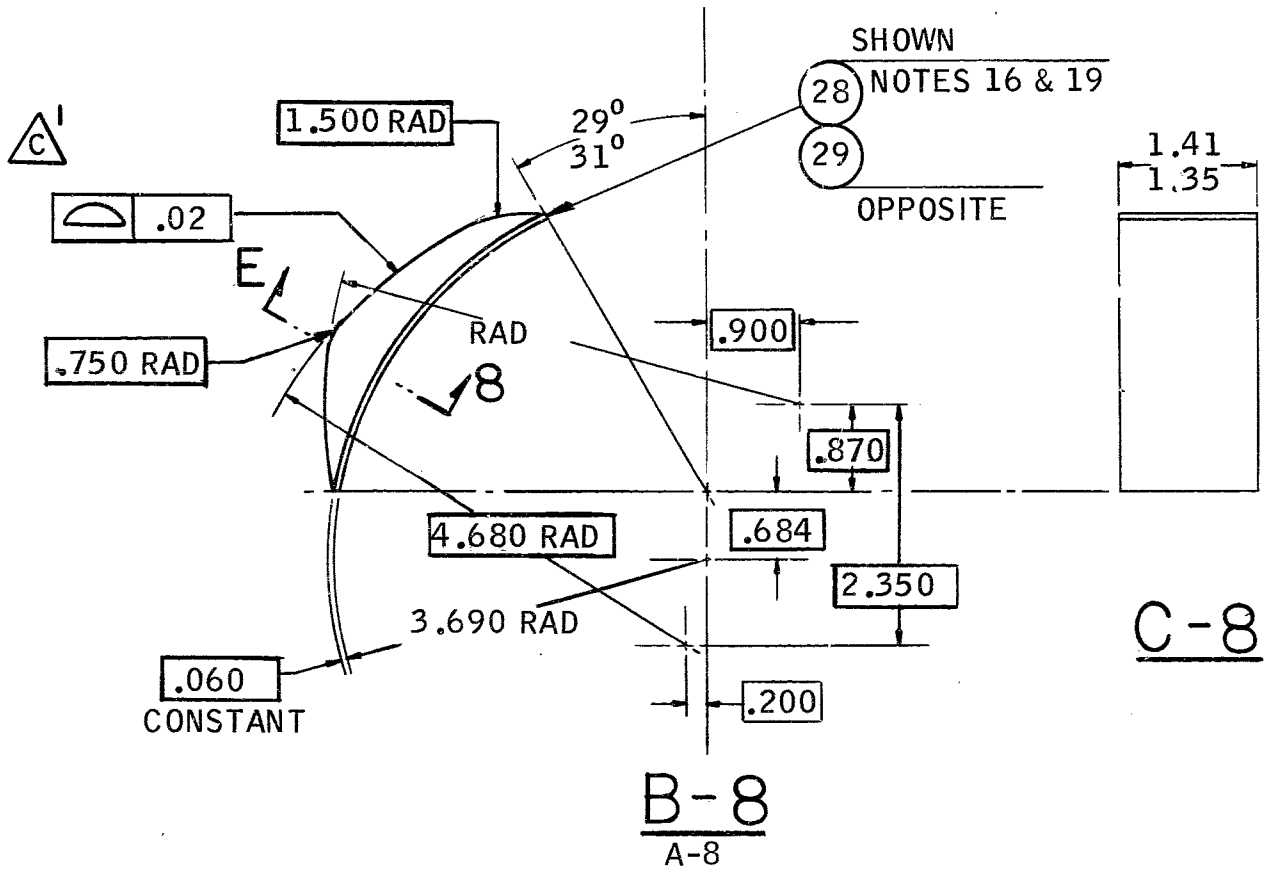

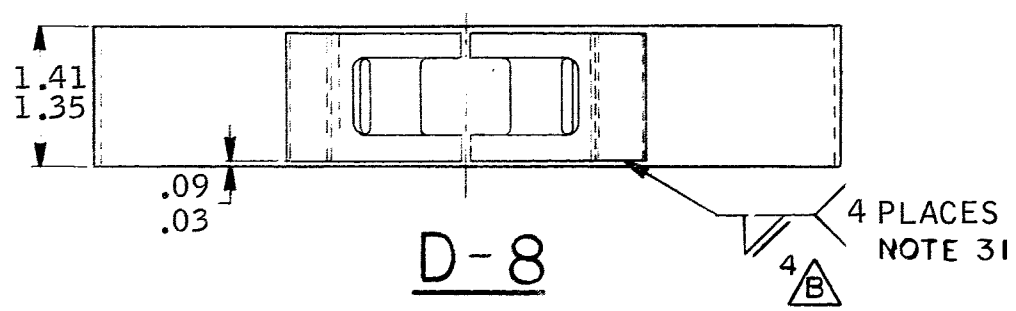

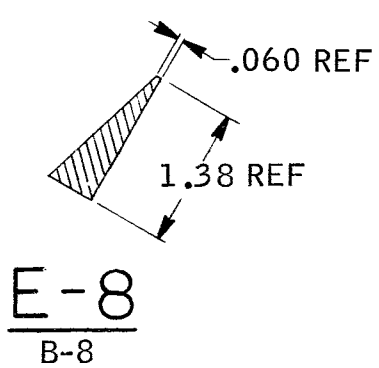

OMNI ANT SUBSTRATE WELDMENT AND FAIRING SUBSTRATE ANT CLAMP	DRAWN	SIZE	CODE IDENT	NAVSEA DRAWING NO.	
	REVIEWED	B	25685	SS472	4491223
		SCALE: NONE		SHREV A B C	SH 8

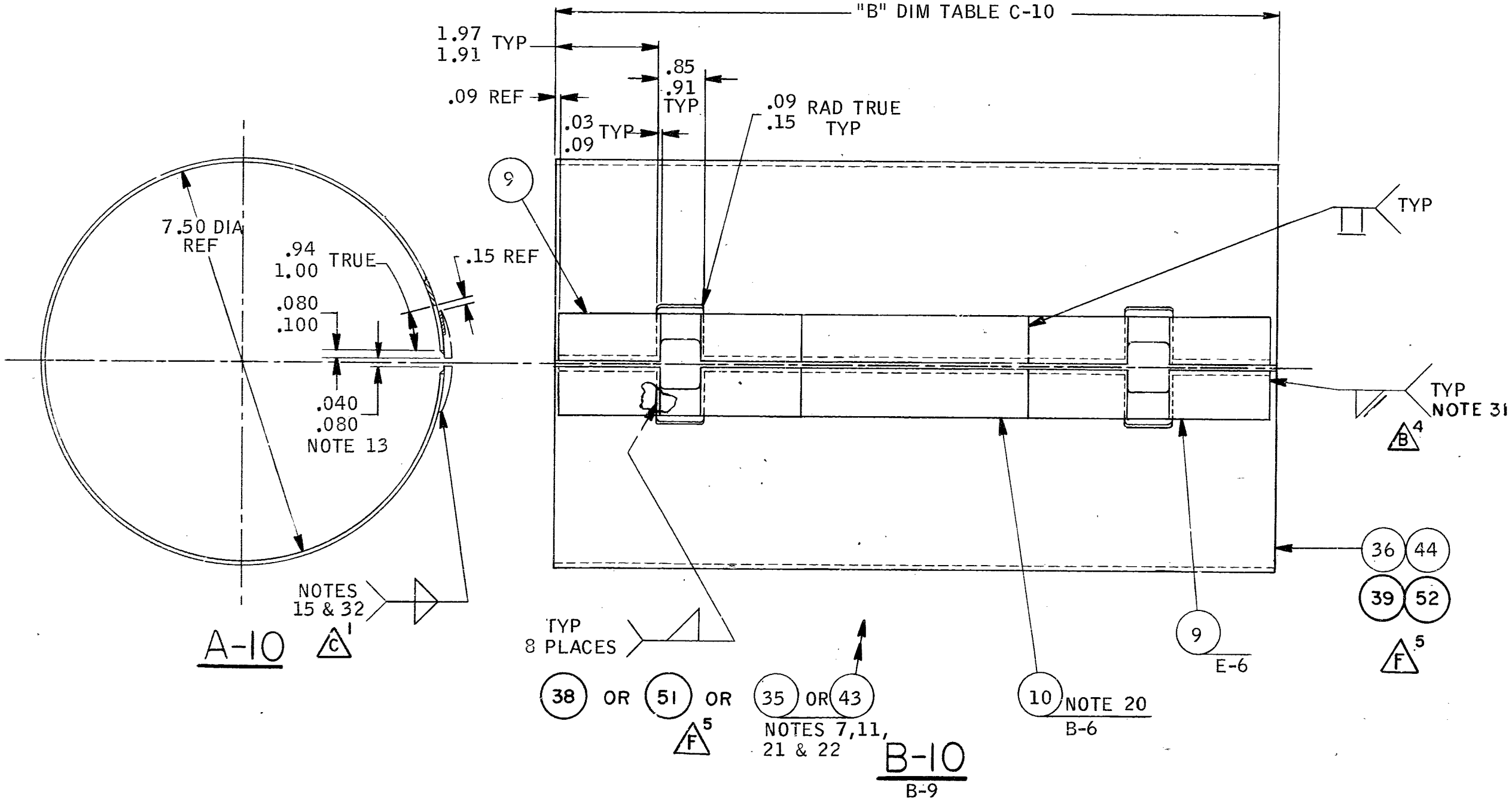

TABLE C-10	
ITEM NO	DIM "B"
35	12.25 12.20
43	16.58 16.53
72	7.37 7.32 B 6
79	6.02 5.97 B 6
38	6.90 6.85 F 6
51	22.95 22.90

UPPER, MID AND LOWER BARREL SUBSTRATE WELDMENT	DRAWN	SIZE	CODE IDENT	NAVSEA DRAWING NO.	
	REVIEWED	B	25685	SS 472 4491223	
		SCALE: NONE		SH REV A B C F	SH 10