DISTRIBUTION LIST △L'

ACTIVITY CODE	KIND	QTY
REVISION →		L
NSWCCD 96TDC	P	1
NSWCCD 96TDC	E	1
NNS ATIS*	E	1
EB ATIS*	E	1
SAIL ISE REPS*	E	6
NAVSEA SPONSOR	E	1
SPAWAR SPONSOR	E	1
NUWC 3432 (FOR PERISCOPE HM&E)*	E	1
NUWC 3493 (FOR ANTENNA)*	E	1
NSWC JCALS (FOR SURFACE SHIP DRAWINGS)	E	–
TOTALS: PAPER / VELLUM	P	1
TOTALS: ELECTRONIC (ADOBE .PDF FILES)	E	13

* DISTRIBUTION WILL BE MADE FROM NSWCCD 96TDC
ELECTRONIC MASTER FILES WILL BE SUPPLIED TO NSWCCD 96TDC

ASSY	LB WT CALC
62	864
61	1050
7	1033
6	1033
5	1025
4	775
3 & 9	777
2 & 8	640
1	923

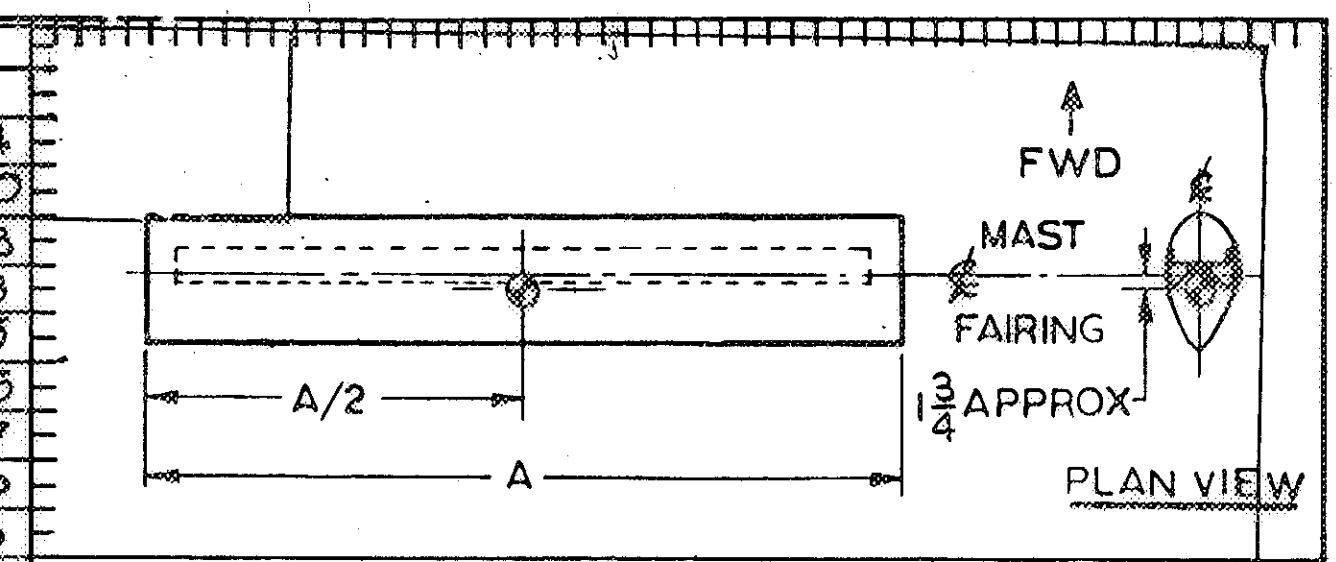

50 LB/LIN FT

CENTER OF GRAVITY CALC

△D' △G'8

△K'

DIMENSIONAL TOLERANCES UNLESS OTHERWISE SPECIFIED						
	MACHINED		WELDMENTS		CASTINGS	
DIMENSION	DECIMALS	FRACTIONS	DIMENSION	TOLERANCE	DIMENSION	TOLERANCE
UNDER 6"	± .005	± 1/64	UNDER 24"	± 1/16	UNDER 2"	+1/16 −1/16
6" TO 24"	± .010	± 1/32	24" & OVER	± 1/8	2" TO 5"	+3/32 −1/16
24 & OVER	± .015	± 1/16			5" TO 8"	+1/8 −3/32
ALL PLASTIC MATERIALS	MACHINED		AS MOLDED		8" TO 12"	+3/16 −1/8
	±.010	± 1/64	ALL DIM	± 1/32	12" TO 15"	+1/4 −3/16
ANGULAR ± 0°30'			ANGULAR	± 0°30'	15 & OVER	+1/4 −1/4

△C'

MACHINED (√) SURFACE FINISHES = 125 UIN (AA), EXCEPT AS NOTED
BREAK ALL SHARP EDGES .01 TO .02, EXCEPT AS NOTED.
THREAD DIMENSIONS AND DESIGNATIONS TO BE IN ACCORDANCE WITH NATIONAL BUREAU OF STANDARDS HANDBOOK H-28 AND MIL-STD-9, RESPECTIVELY. MATL SPEC TOLERANCES APPLY TO STOCK SIZES.

△E'

5361680
5361569
4398626
4398606
4398595
[illegible]
NEXT ASSY
APPLICATION

STD COMPONENT DWG

OFFICIAL	SIGNATURE	DATE
DEPT HEAD	[illegible]	8-5-70
BRANCH HEAD	[illegible]	8-5-70
SECTION HEAD	[illegible]	8-5-70
PROJECT ENGR	[illegible]	7-31-70
REVIEWED	T.E.S.	7-31-70
DRAWN	NHC/SEF	7/9/70
APPROVED	[illegible]	DATE 8/5/70
DIRECTOR SUBMARINE ANT. O.A.		

NAVAL SHIP ENGINEERING CENTER
PHILADELPHIA DIVISION (SAQAD)
NAVAL BASE, PHILADELPHIA, PENNA., 19112

MAST FAIRING ASSY

MAST FAIRING ASSY

SIZE	CODE IDENT	NAVSHIPS DRAWING NUMBER	REV
B	25685	SS-128-4491143	L

SCALE: NOT TO BE SCALED

SHEET 1 OF 17

DISTRIBUTION LIST

ACTIVITY CODE	KIND	QUANTITY (REVISION → K)
COMSUBLANT	D	1
COMSUBPAC	D	1
NAVSURFWARFARECTR C3021	S	1
SPAWAR PDW 110-32	D	
NAVSEA PMS 393 A2	D	1
NAVSEA PMD 4015	D	
SPCC MECH CODE 0543	D	1
TRIREFTFAC CODE 424	D	1
CONSWC 98F	D	13
CONSWC 3423 (98)	S	1
CONSWC 3423 (98)	D	2
CONSWC 961	B	
CONSWC 962	B	
CONSWC 963	D	
CONSWC 964	B	
SUBMEPP 1805L	D	1
SUBMEPP 1823	D	1
SUPSHIPS NPTNWS CODE Z33A	D	1
SUPSHIPS GROTON	D	1
NAVSHIPYD PTSMH CODE 202.1	S	1
NAVSHIPYD CHARS	D	1
NAVSHIPYD NORF	D	1
NAVSHIPYD PEARL	D	1
NAVSHIPYD PTSMH CODE 202.2	S	1
NAVSHIPYD PUGET	D	1
NAVSHIPYD S. F. BAY MARE ISLAND	D	1
SHIPYD NPTNWS SHIPBLDG, DEPT E-68	D	1
SHIPYD EB/EB GROTON, D-406	D	1
SUBMARINE TENDERS (ONE EACH - 10 SETS)	D	10
NAVSHIPREPFAC GUAM	D	
NAVSHIPREPFAC - YOKOSUKA	D	1
NAVSUBSUPPFAC NLON CODE 768	D	1
SUBASE PEARL HARBOR	D	1
NUWC CODE 3423	D	1
NESEC NORFOLK CODE 510	D	1
TOTALS: SILVER HALIDE APERTURE CARD *	S	4
TOTALS: DIAZO APERTURE CARD *	D	46
TOTALS: VANDIKE/SEPIA	V	-
TOTALS: BLUEPRINT/BLUELINE	B	-

DATE AUTHORIZED — MM 8, DD 25, YY 72

* MICROFILM SHALL BE IN ACCORDANCE WITH MIL-M-9868 TYPE 1, CLASS 1, FOR SILVER HALIDE AND TYPE II, CLASS 2 FOR DIAZO. 35 MM MICRO REPRODUCTION SHALL BE MOUNTED ON STANDARD TABULATING APERTURE CARDS WITH FORMATS AND CODING IN ACCORDANCE WITH THE LATEST ISSUE OF MIL-STD-804

MICROFILM RECORD SHALL BE MADE OF THIS DRAWING AND APERTURE CARD PREPARED FOR FILE

-449143-

MULTIPLE SYS APPLICATION - SEE TABLE A-11

NEXT ASSY APPLICATION
5361680
5361569
4398626
4398606
4398595
1376137

REV	LB WT CALC
62	864
61	1050
7	1033
6	1033
5	1025
4	775
3 & 9	777
2 & 8	640
1	923
ASSY	

50 LB/LIN FT

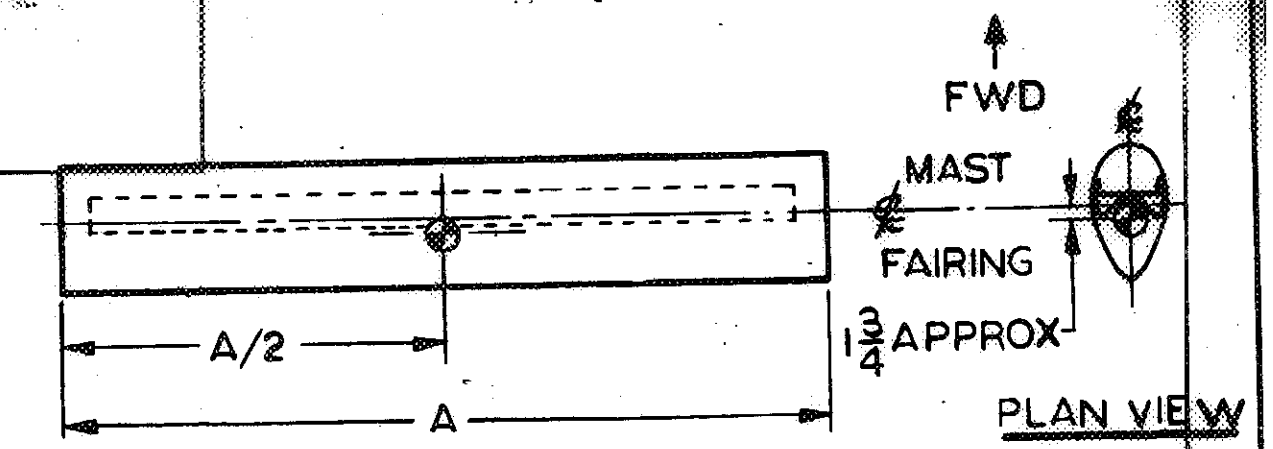

CENTER OF GRAVITY CALC

DIMENSIONAL TOLERANCES UNLESS OTHERWISE SPECIFIED						
	MACHINED		WELDMENTS		CASTINGS	
DIMENSION	DECIMALS	FRACTIONS	DIMENSION	TOLERANCE	DIMENSION	TOLERANCE
UNDER 6"	± .005	± 1/64	UNDER 24"	± 1/16	UNDER 2"	+1/16 −1/16
6" TO 24"	± .010	± 1/32	24" & OVER	± 1/8	2" TO 5"	+3/32 −1/16
24 & OVER	± .015	± 1/16			5" TO 8"	+1/8 − 3/32
ALL PLASTIC MATERIALS	MACHINED		AS MOLDED		8" TO 12"	+3/16 − 1/8
	±.010	± 1/64	ALL DIM	± 1/32	12" TO 15"	+1/4 − 3/16
ANGULAR ± 0°30'			ANGULAR	± 0°30'	15 & OVER	+1/4 − 1/4

MACHINED (√) SURFACE FINISHES = 125 UIN (AA), EXCEPT AS NOTED
BREAK ALL SHARP EDGES .01 TO .02, EXCEPT AS NOTED.
THREAD DIMENSIONS AND DESIGNATIONS TO BE IN ACCORDANCE WITH NATIONAL BUREAU OF STANDARDS HANDBOOK H-28 AND MIL-STD-9, RESPECTIVELY. MATL SPEC TOLERANCES APPLY TO STOCK SIZES.

STD COMPONENT DWG		
OFFICIAL	SIGNATURE	DATE
DEPT HEAD		8-5-70
BRANCH HEAD		8-5-70
SECTION HEAD		8-5-70
PROJECT ENGR		7-31-70
REVIEWED	T.E.S.	7-31-70
DRAWN	NHC/SEF	7/9/70
APPROVED		DATE 8/5/70
DIRECTOR SUBMARINE ANT. Q.A.		

NAVAL SHIP ENGINEERING CENTER
PHILADELPHIA DIVISION (SAQAD)
NAVAL BASE, PHILADELPHIA, PENNA., 19112

MAST FAIRING ASSY

MAST FAIRING ASSY

SIZE	CODE IDENT	NAVSHIPS DRAWING NUMBER	REV
B	25685	SS-128-449143	K

SCALE: NOT TO BE SCALED — SHEET 1 OF 17

INDEX

SHT NO	TITLE	REV
1	COVER SHEET	L
2	INDEX AND REFERENCES	L
3	GENERAL NOTES	L
4	PARTS AND MATERIAL LIST	L
5	PARTS AND MATERIAL LIST	L
6	CONTOUR AND OFFSETS	L
7	ASSEMBLY PLAN	L
8	ASSEMBLY ELEVATION	L
9	SIGMA, CHANNEL AND ASSY FIXTURE	G
10	GROUND SCREEN AND MISC DETAILS	L
11	TABULATION BLOCK	L
12	BRG MOUNTING DETAILS	L
~~13~~	~~TABULATION BLOCK FOR ASSY NO. 3~~	~~A~~
13	ASSEMBLY 61	J
14	ASSEMBLY 62	K
15	ASSEMBLY 62	J
16	REVISIONS	J
17	REVISIONS	L

REFERENCES

NO	TITLE	DRAWING NUMBER
1	SUB ANT FIBERGLASS MAST SPECIFICATIONS	SS-128-2477254
2	HYDRAULIC CYLINDER, 3 1/2 BORE, 2 7/8 DIA ROD	SS-522-2113490
~~3~~	~~BARONE UPPER BEARING ASSEMBLY~~	~~SS-522-4348675~~
4	ERECTING SHEAVE ASSEMBLY	SS-522-4491144
5	RETRACTING SHEAVE ASSEMBLY	SS-522-4491145
6	HOIST CYLINDER MOUNTING BRACKET	SS-522-4491146
7	HOIST CYLINDER STEADY BEARING ASSEMBLY	SS-522-4491147
8	INNER MAST FAIRING	SS-522-4491148
9	INNER MAST UPPER BEARING ASSEMBLY	SS-522-4491149
10	INNER MAST BEARING SLED ASSEMBLY	SS-522-4491150
11	ERECTING AND RETRACTING CABLE ASSEMBLY	SS-522-4491151
12	CABLE GUIDE SHEAVE AND SUPPORT ASSEMBLY AND DET	SS-522-4491153
13	ADJUSTABLE ERECTING SHEAVE ASSY	SS-522-4491158
14	ADJUSTABLE RETRACTING SHEAVE ASSY	SS-522-4491159
15	RETRACTING SHEAVE ASSEMBLY	SS-522-4491152
16	HOIST CYLINDER MOUNTING BRACKET	SS-522-2268674
17	BRA-34 ANT PKG PRE-INSTL PLANNING DATA	401-5361-69
18	CONFIGURATION IDENT PLATES, TAGS	33-6-0120
19	PRODUCT FABRICATION SPECIFICATION FOR FIBERGLAS MAST	SPEC NO. 962-101C

22. BOND MATERIAL SHOULD EXTRUDE AROUND EDGES OF TAG. CLEAR EPOXY SHOULD THEN BE APPLIED TO COAT THE TAG FACE AND THE BOND EXTRUSION.

23. GREER-SMYRNA NUTS ARE AN ACCEPTABLE ALTERNATIVE FOR ESNA STOPNUTS, PC 41.

THE FOLLOWING STANDARDS ARE INVOKED: (A) MIL-STD-248 QUALIFICATION TEST FOR WELDERS. (B) L-STD-271-60R DESTRUCTIVE TESTING OF WELDS. (C) NAVSHIPS 0900-003-6000 ACCEPTANCE STANDARDS FOR METALS.

INDEX AND REFERENCES

CONTINUED ON SHEET 3

DRAWN SEF
REVIEWED T.E.S.

SIZE	CODE IDENT	NAVSHIPS DRAWING NO
B	25685	SS-128-4491143

SCALE
SH REV A B C D E F G H J K
SH 2

PIECE NO.	NAME (3 2 1 0)	QTY	MATERIAL	SPEC	REMARKS AND/OR STOCK NO.	✳	NOTE 8	ON SHT	PIECE NO.
1	COMPONENT; MAST FAIRING, ASSY NO. 1	1	→	REF 1	C/O PIECES 11 THRU 45 AND 47 THRU 53 FOR AN/BQR-19	P		11	1
2	COMPONENT; MAST FAIRING, ASSY NO. 2	1	→	REF 1	C/O PIECES 11 THRU 45 AND 47 THRU 55 FOR AN/BRD-7	P		11	2
3	COMPONENT; MAST FAIRING, ASSY NO. 3	1	→	REF 1	C/O PIECES 11 THRU 45 AND 47 THRU 55 FOR AN/BRA-34	P		11	3
4	COMPONENT; MAST FAIRING, ASSY NO. 4	1	→	REF 1	C/O PIECES 11 THRU 45 AND 47 THRU 55 FOR AN/BRD-7	P		11	4
5	COMPONENT; MAST FAIRING, ASSY NO. 5	1	→	REF 1	C/O PIECES 11 THRU 45 AND 47 THRU 53 FOR AN/BQR-19 INTERIM	P		11	5
6	COMPONENT; MAST FAIRING, ASSY NO. 6	1	→	REF 1	C/O PIECES 11 THRU 45 AND 47 THRU 53 FOR AN/BQR-19 INTERIM	P		11	6
7	COMPONENT; MAST FAIRING, ASSY NO. 7	1	→	REF 1 & 19	C/O PIECES 11 THRU 45 AND 47 THRU 55 FOR AN/BRA-34	P		11	7
8	COMPONENT; MAST FAIRING, ASSY NO. 8	1	→	REF 1	C/O PIECES 11 THRU 43 AND 46 THRU 55 FOR AN/BRD-7	P		11	8
9	COMPONENT; MAST FAIRING, ASSY NO. 9	1	→	REF 1	C/O PIECES 11 THRU 43 AND 46 THRU 55 FOR AN/BRA-34	P		11	9
10									10
11	MOLDED SECTION; FWD	1	FIBERGLASS	REF 1	INCL PCS 12 THRU 25 SEE NOTE 11	P		6	11
12	SCREEN; GROUNDING	1	COML BRZ	→	#14 X 18 MESH (.011 WIRE) 24" WIDE	P		10	12
13	DISC, GROUNDING 1 1/2 DIA x 1/8	4	CU-NI	MIL-C-15726	2 OF QTY FOR PC 26, 70-30 SOFT	P		10	13
14	SCREW, FLH, #10-24NC-3A x 1/4	4	NI-CU	QQ-N-281	FOR PC 13, FF-S-92, TYPE I, STYLE 2S	P		7	14
15									15
16	NUT, SLF LKG SPLINE, 1/4-28 UNF	28	CRES	MIL-I-8846	24 OF QTY FOR PC 26, MS51866-C20, 5310-00-413-9572, NOTE 14	P		7	16
17	SCREW, FLH, 1/4-28UNF-2A x 1/2	28	NI-CU	QQ-N-281	FOR PC 16, CL A, FF-S-92, TYPE I, STYLE 2S, W/NYLOK IAW MS15981	P		7	17
18									18
19	COVER; ACCESS	2	FIBERGLASS	MIL-P-17549	GRADE III SEE NOTES 7 & 11	P		8	19
20									20
21	BAR, GROUNDING 1/8 THK	2	CU-NI	MIL-C-15726	70-30 SOFT	P		10	21
22									22
23	TAG; IDENTIFICATION 30 GA (.012 THK)	1	CRES	QQ-S-766	CL 304, CONDTN A SEE NOTES 5 & 10	P		10	23
24									24
25									25
26	MOLDED SECTION; AFT	1	FIBERGLASS	REF 1	INCL PCS 27 THRU 39, 2 OF PC 13 & 14, 24 OF PC 16 & 17, SEE NOTE 11	P		6	26
27	SCREEN; GROUNDING	1	COML BRZ	→	#14 X 18 MESH (.011 WIRE), 36" WIDE	P		10	27
28	STRIP; GROUNDING 2 x 3/16	2	CU-NI	MIL-C-15726	70-30 SOFT NOTE 27	P		10	28
29	SCREW, FLH, SELF TAPPING	→	CRES	QQ-S-763	QTY PER A-11, CL 303, #10-16 x 3/4, FF-S-107, TYPE B OR BG, STYLE 23	P		7	29
30									30
31	STRIP, GROUNDING 2 x 3/16	2	CU-NI	MIL-C-15726	70-30 SOFT NOTE 28	P		8	31
32	SCREW, FLH, #10-24NC-2A x 1	→	NI-CU	QQ-N-281	QTY PER A-11, FF-S-92, TYPE I, STYLE 2S	P		7	32
33									33
34	COVER; ACCESS	2	FIBERGLASS	MIL-P-17549	GRADE III SEE NOTES 7 & 11	P		8	34
35									35
36	IDENT PLATE	AR	→	REF 18	P/N 6604120-2	P		8	36
37	SCREW, PNH #4	4	CRES		5310-00-054-5649	P		8	37
38	LOCKWASHER #4	4	CRES		5310-00-933-8118	P		8	38
39									39

✳	SOURCE
D	DESIGN YARD
F	FOLLOW YARD
P	NAVSECPHILADIV
N	NAVSHIPS FURNISHED

PARTS AND MATERIAL LIST

DRAWN SEF

REVIEWED T.E.S.

SIZE	CODE IDENT	NAVSHIPS DRAWING NO.
B	25685	SS-128-4491143
SCALE:	SHREV A B C D E F G K L	SH 4

PIECE NO.	NAME (3 2 1 0)	QTY	MATERIAL	SPEC	REMARKS AND/OR STOCK NO.	✳	NOTE 8	ON SHT	PIECE NO.
40	CHANNEL; MOLDED SECTION	1	FIBERGLASS	REF 1	INCL PCS 41 THRU 45 OR 46	P		9	40
41	NUT; SPLINE, 1/2-20UNF-3B	→	NI-CU	MIL-N-25027	QTY PER A-11, QTY INCL FOR PC 47, ESNA PART 11037-8, SEE NOTE 10,19&23	P		7	41
42	SCREW; FLH, 1/2-20UNF-2A x 1 1/4	→	NI-CU	QQ-N-281	QTY PER A-11, CL A, FF-S-92, TYPE I, STYLE 25	P		7	42
43	SCREW; FLH, 1/2-20UNF-2A	→	NI-CU	QQ-N-281	QTY PER A-11, CL A, FF-S-92, TYPE I, STYLE 25	P		7	43
44	BOLT; HEX HD, 1/2-20UNF-2A x 1 1/2	4	NI-CU	QQ-N-281	CL A, FF-S-85, TYPE II ; LENGTH AS REQ BY NOTE 20	P		7	44
45	BUSHING	→	NI-CU	QQ-N-281	CL A, COLD DRAWN	P		6	45
46	BUSHING	→	NI-CU	QQ-N-281	CL A, COLD DRAWN QTY PER A-11	P		12	46
47	SIGMA; MOLDED SECTION	1	FIBERGLASS	REF 1	INCL PC 48-52 & NEC QTY OF PC 41 QTY PER A-11	P		12	47
48	SCREW, FLH, 1/2-20UNF-2A x 1 1/2	→	NI-CU	QQ-N-281	QTY PER A-11, CL A, FF-S-92, TYPE I, STYLE 25 SEE NOTE 11	P		9	48
49	NUT, SPLINE, 3/8-24UNF-3B	4	NI-CU	MIL-N-25027	ESNA OGND 20-064	P		7	49
50	BOLT, HEX HD, 3/8-24UNF-2A x 1 3/4	4	NI-CU	QQ-N-281	CL A, FF-S-85, TYPE II SEE NOTE 10	P		6	50
51	SIGMA; REMOVABLE SECTION	1	FIBERGLASS	REF 1		P		6	51
52					SEE NOTE 11	P		12	52
53	FIXTURE; ASSY AND INSP 3" WIDE	1	ALUM	COML	BY MFR SUITABLE FOR ASSY AND INSPECTION	←		9	53
54	SER NO PLATE	1	CRES	QQ-S-766	CL 304, CONDTN A (FOR PC. NO'S. 2, 3, 4 & 7) SEE NOTES 5, 6 & 22	P		8	54
55	ADHESIVE, EPOXY (K)	AR	→	COML	VERSILOCK 506 W/HARDNER 8040-01-170-3599	P		8	55
56	INSERT; KEENSERT 1/2-13UNC-3B x 11/16	3	CRES	QQ-S-763	CL 304, KNHL-813 (INT THD LKG) TRIDAIR. INC.	P		13	56
57	SCREW, SCH CAP, 1/2-13UNC-3A x 4 3/4	2	NI-CU	QQ-N-281	CL A, FF-S-86, TYPE VI	P		13	57
58	SCREW, SCH CAP, 1/2-13UNC-3A x 1 1/2	1	NI-CU	QQ-N-281	CL A, FF-S-86, TYPE VI	P		13	58
59	WASHER; LOCK, HI-COLLAR, 1/2	3	NI-CU-AL	QQ-N-286	IAW MS 51848	P		13	59
60	SEALER (K)	AR	CLEAR RESIN		PHILLYCLAD 1000 8040-00-N00-4038	P		8	60
61	COMPONENT; MAST FAIRING, ASSY NO. 61	1	→	REF 1	C/O PIECES 11 THRU 45 & 47 THRU 54 FOR AN/BRA-21	P		13	61
62	COMPONENT; MAST FAIRING, ASSY NO. 62	1	→	REF 1	C/O PIECES 11 THRU 45 & 47 THRU 55 & 60 FOR AN/BRA-34	P		14	62
63	SCREW, SCK FLH 1/2-20UNF-2A X 1 1/2	→	NI-CU	QQ-N-281	CL A, FF-S-86, TYPE IV	P		7	63
64	INSERT, KEENSERT	28	CRES	—	5325-00-805-0337	P		7	64
65	SCREW, SCK FLH 1/4-28UNF-2A X 1/2	28	NI-CU	QQ-N-281	FOR PC 64, CL A, FF-S-86, TYPE IV W/NYLOK IAW MS15981	P		7	65
66	SCREW, SCK FLH 1/2-20UNF-2A	→	NI-CU	QQ-N-281	CL A, FF-S-86, TYPE IV; LENGTH AS REQ BY NOTE 20.	P		7	66

GENERAL NOTES:

24. IN VIEW B-14, THE 4 3/8 DIMENSION SHALL GOVERN OVER THE 4 1/4 DIMENSION "G" FROM BOTTOM OF MAST TO BOTTOM OF SIGMA. LENGTH OF SIGMA SHALL NOT BE ALTERED.

(K) (L) 8 ~~25. IN VIEW C-10, 4 3/8 DIMENSION SHALL GOVERN OVER THE 4 1/4 "H" DIMENSION, ONLY INTERNAL GROUNDING STRIP SHALL BE LOCATED 4 3/8 FROM BOTTOM OF MAST.~~

26. FOR SCREW HEAD DEPTH TOLERANCES SEE REF 19.

~~27. INTERNAL GROUNDING STRIPS, ITEM 28, MUST BE FLAT WITHIN .090 T.I.R. AFTER INSTALLATION AND MUST NOT PROTRUDE BY MORE THAN .010 OR RECESS BY MORE THAN .050 BEYOND THE ZERO POINT ESTABLISHED BY THE REVISED NAVSSES INSPECTION PROCEDURE DATED 10/30/92.~~

(L) 8 ~~28. EXTERNAL GROUNDING STRIPS, ITEM 31, MUST BE FLAT WITHIN .050 T.I.R.~~

29. FILL HOLES AND CUT OUT AREA WITH ADHESIVE ITEM 55. INSTALL IDENT PLATE ITEM 36 AND SECURE WITH PNH SCREWS ITEM 37 AND LOCKWASHERS ITEM 38. COAT ENTIRE AREA WITH SEALER ITEM 60.

(L) 9 30. COAT HOLES WITH ADHESIVE PC 55 PRIOR TO INSTALLING PC. 64.

✳	SOURCE
D	DESIGN YARD
F	FOLLOW YARD
P	NAVSECPHILADIV
N	NAVSHIPS FURNISHED

PARTS AND MATERIAL LIST

DRAWN SEF

REVIEWED T.E.S

SIZE	CODE IDENT	NAVSHIPS DRAWING NO.
B	25685	SS-128-4491143
SCALE:		SH REV A B C E F G H J K SH 5

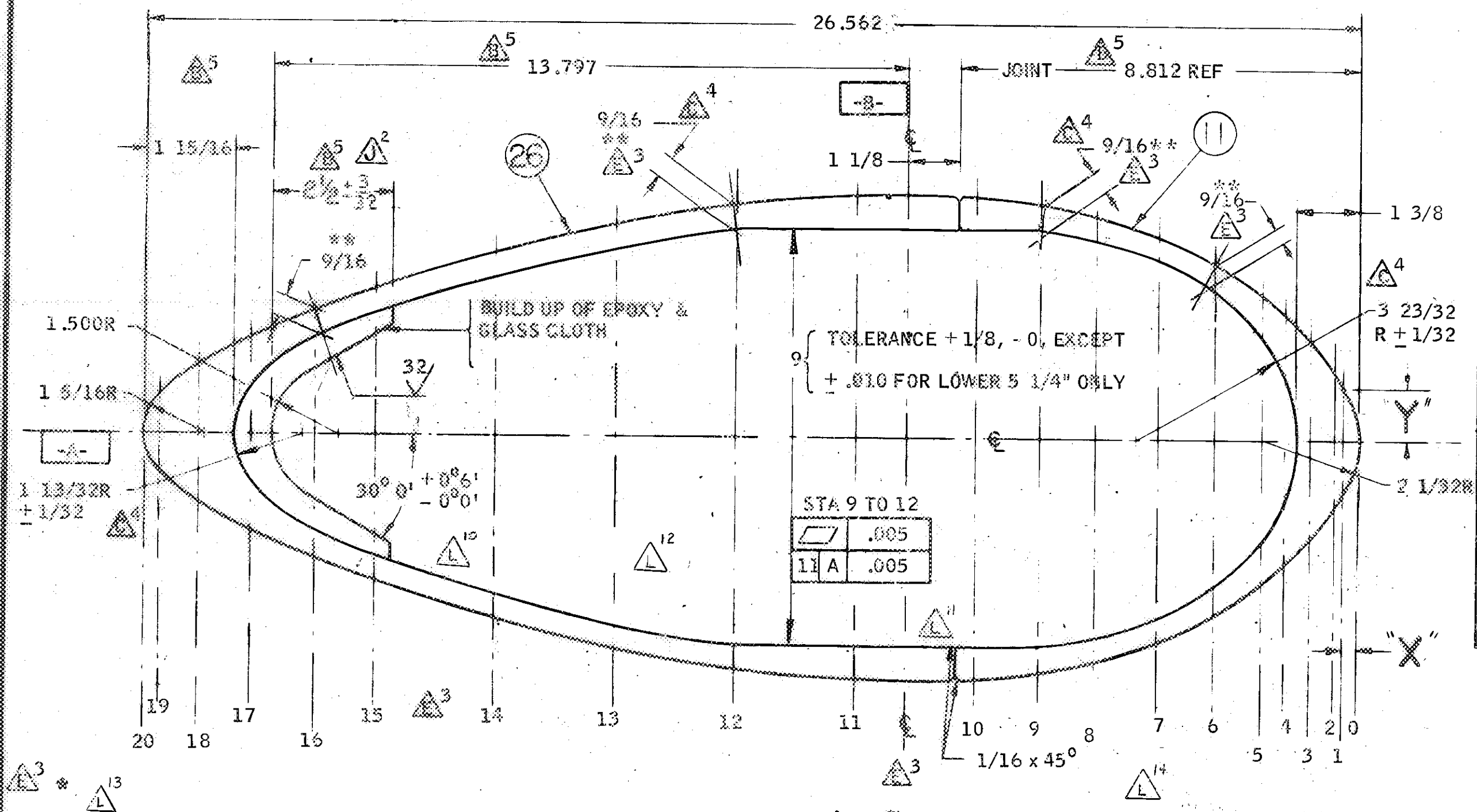

A-6
A-7

DIMENSION TOLERANCE ± .01		
STA	"X" FROM 0 REF	"Y" HALF BREADTH
1	.33	1.17
2	.53	1.52
3	1.04	2.18
4	1.58	2.71
5	2.09	3.14
6	3.14	3.83
7	4.45	4.48
8	5.76	4.90
9	6.55	5.07
10	8.38	5.29
℄	9.94	5.31
11	11.01	5.30
12	13.63	5.09
13	16.23	4.64
14	18.85	4.00
15	21.48	3.18
16	22.79	2.70
17	24.10	2.16
18	25.41	1.46
19	26.11	.97

B-6
A-6
TABLE OF OFFSETS

** TOL ON 9/16 WALL THICKNESS IS + 3/32, - 1/32.
TOTAL THICKNESS VARIATION ≤ 1/8.

CONTOUR & OFFSETS

DRAWN
REVIEWED

SIZE	CODE IDENT	NAVSHIPS DRAWING NO.
B	25685	SS-128-4491143
SCALE NONE		SHREV A B C E J L SH 6

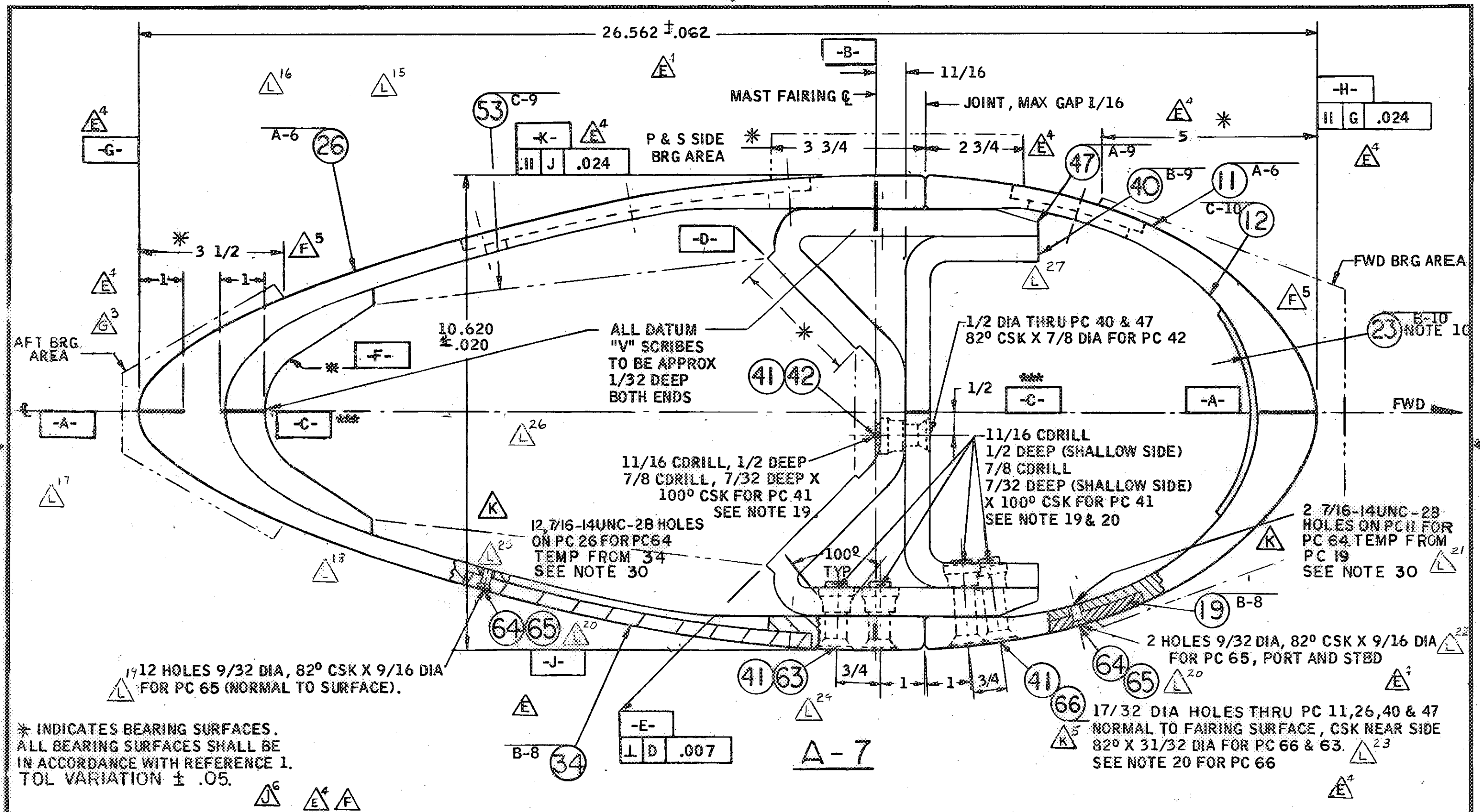

* INDICATES BEARING SURFACES.
ALL BEARING SURFACES SHALL BE
IN ACCORDANCE WITH REFERENCE 1.
TOL VARIATION ± .05.

*** SEE NOTE 21 FOR DATUM -A- AND -C- COPLANARITY REQUIREMENTS.

ASSEMBLY PLAN	DRAWN SEF REVIEWED T.E.S.	SIZE B	CODE IDENT 25685	NAVSHIPS DRAWING NO. SS-128-4491143
		SCALE: 1/2	SH REV A B C E F G J K L	SH 7

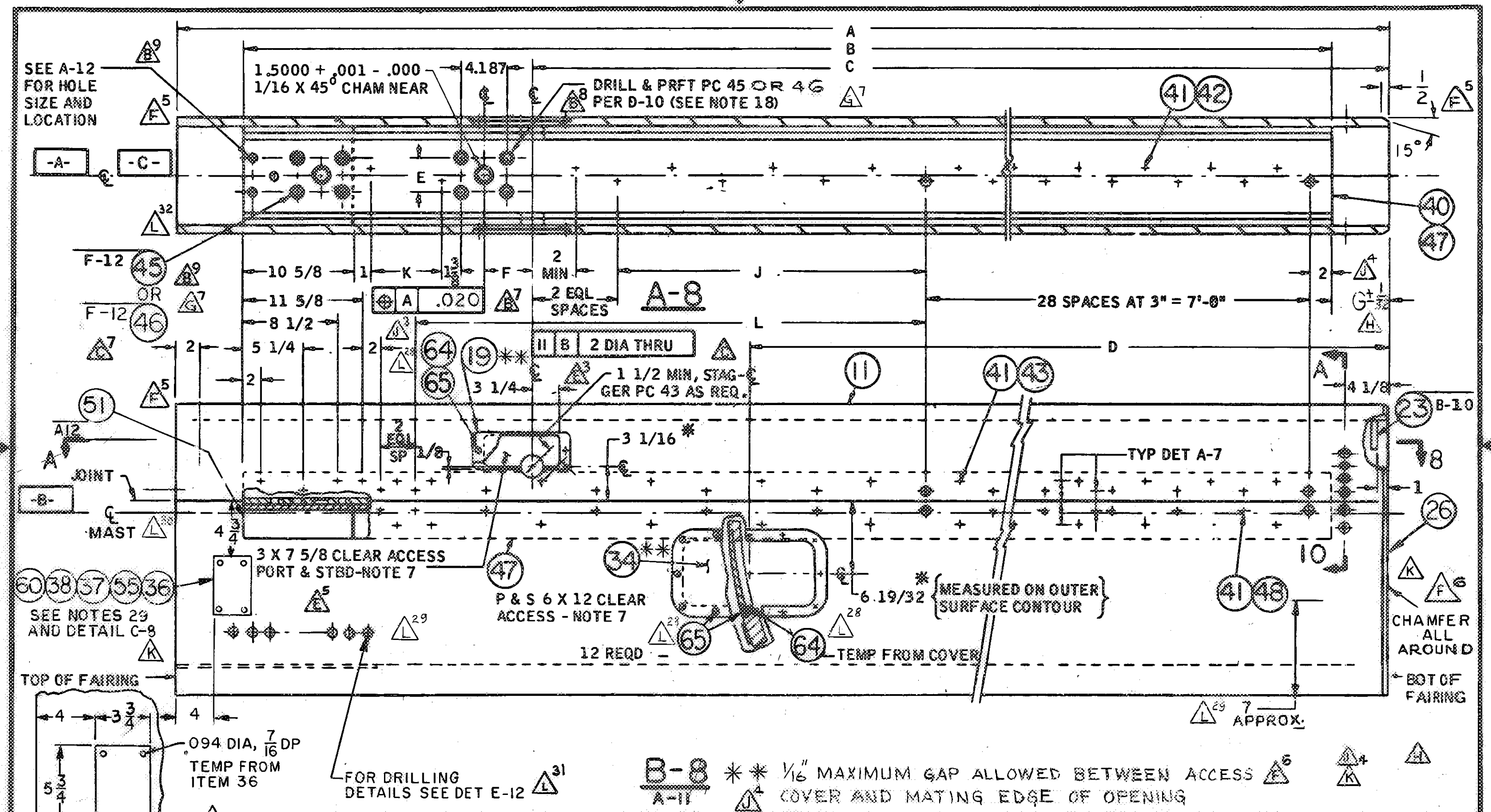

ASSEMBLY ELEVATION	DRAWN	SIZE	CODE IDENT	NAVSHIPS DRAWING NO.
	REVIEWED	B	25685	SS-128-4491143
		SCALE: NONE		SHREV A B C E F G H J K L SH 8

△6 E

NOTE D-9:

MACHINE P & S MATING SURFACES √ WITHIN DIMENSIONAL TOLERANCES AND AS REQUIRED TO PRODUCE A SNUG FIT OF .000 TO .010 CLEARANCE, WHILE PC 47 IS IN FREE STATE AND PC 40, 11 & 26 ARE RESTRAINED ONLY BY NORMAL ASSEMBLY FORCES AS REQUIRED BY THE OFFSET TABLE A-6.

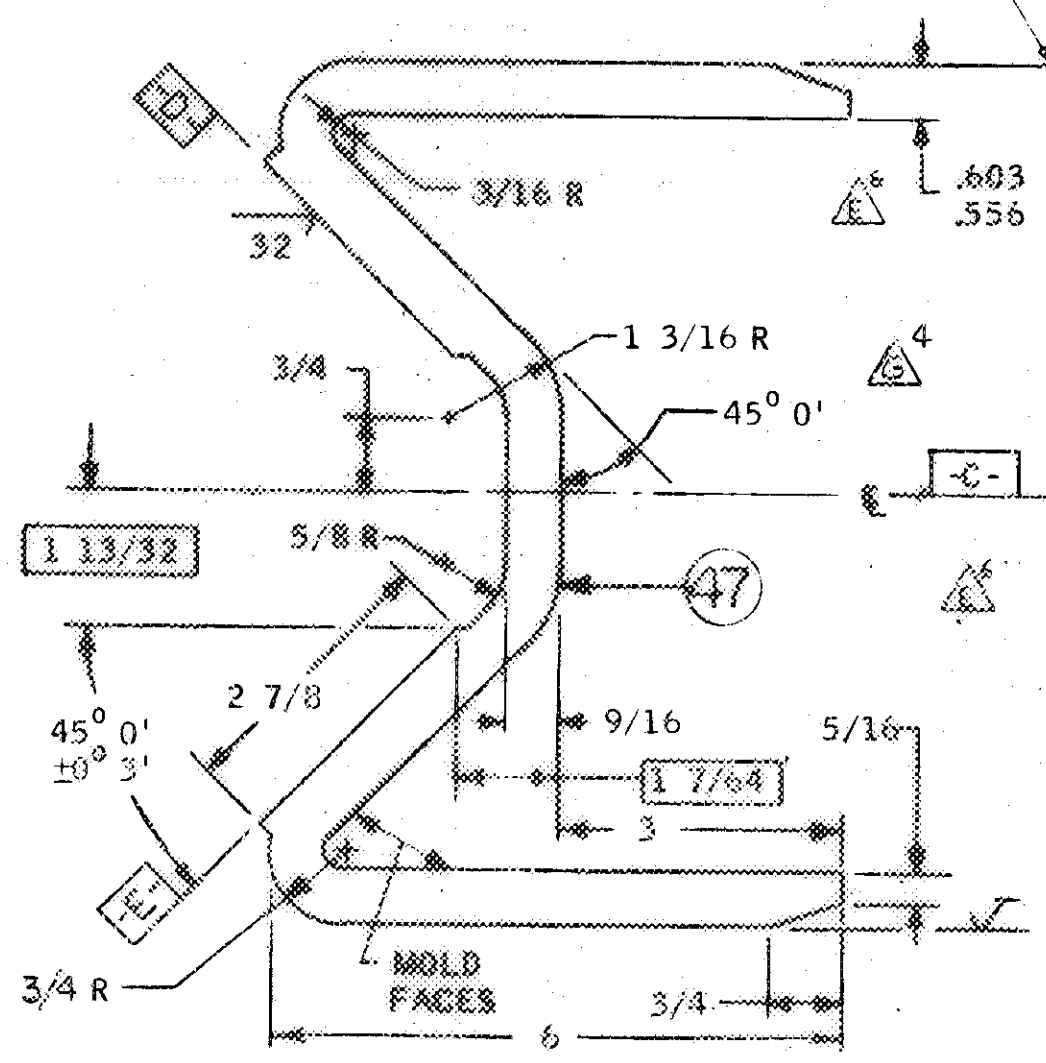

A-9
A-7

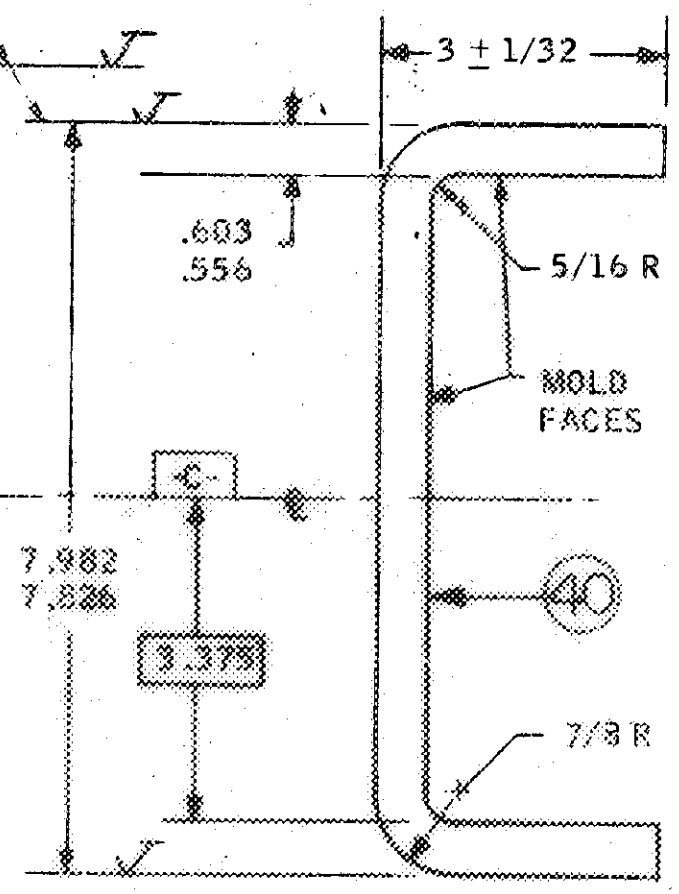

B-9
A-7

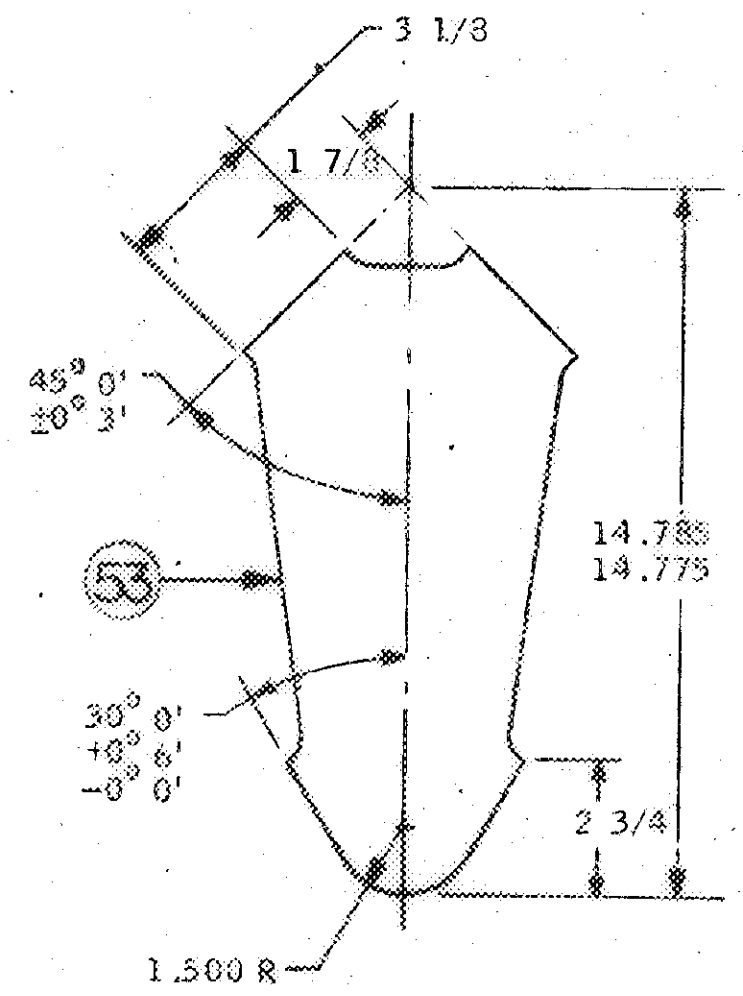

C-9
A-7

SIGMA, CHANNEL AND ASSY FIXTURE	DRAWN SEF REVIEWED	SIZE B	CODE IDENT 25685	NAVSHIPS DRAWING NO. SS-128-449143
		SCALE		SHREV △5 E △6 △ △ △ SH 9

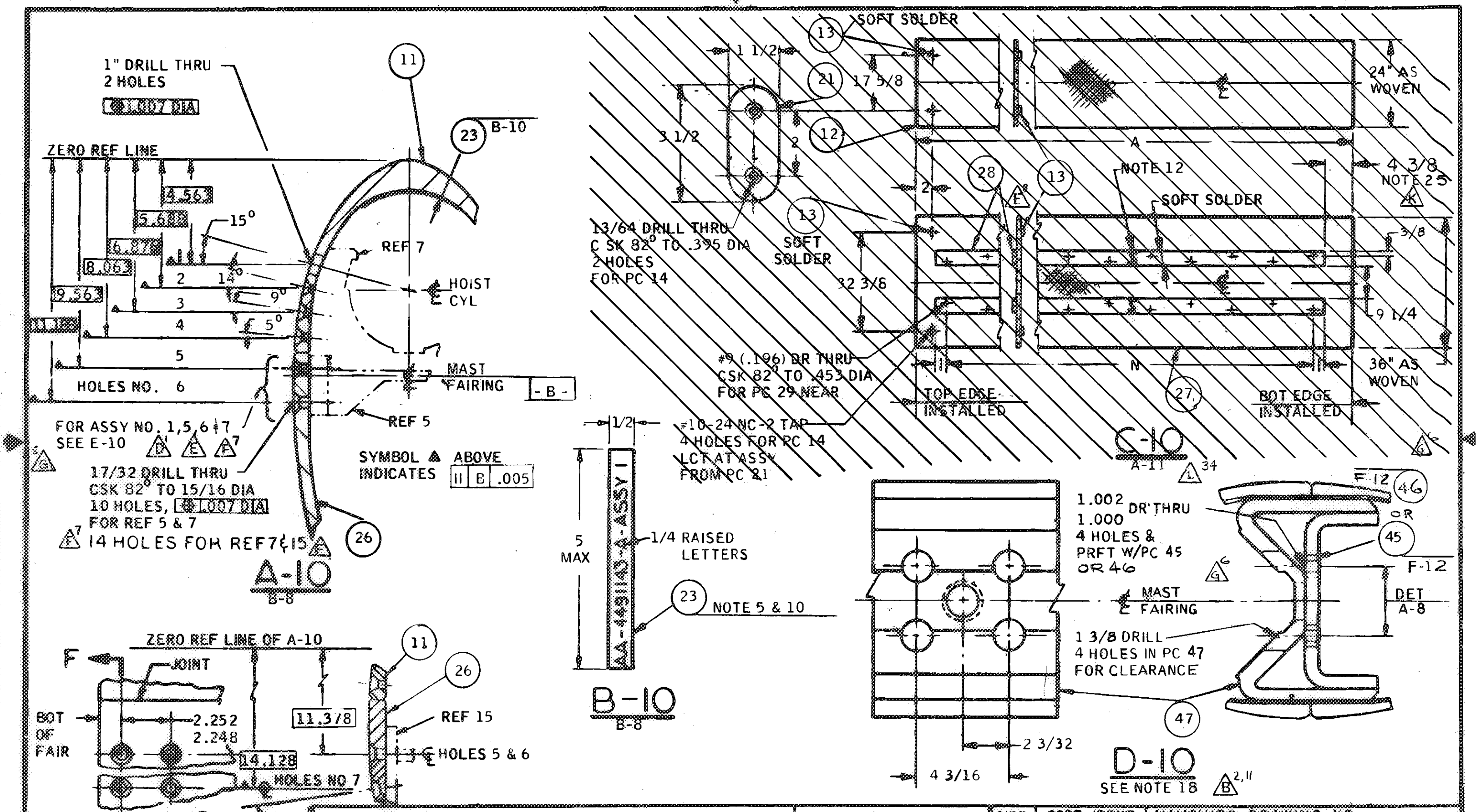

GROUND SCREEN & MISC DETAILS

DRAWN N.J.C.	SIZE	CODE IDENT	NAVSHIPS DRAWING NO.
REVIEWED J.E.S.	B	25685	SS-128-449143
	SCALE —	SHREV A B D E F G K L	SH 10

LM ASSEMBLY NO			1	2	3	4	5	6	7	8	9	61	62
ANTENNA SYSTEM			AN/BQR-19	AN/BRD-7	AN/BRA-34	AN/BRD-7	AN/BQR-19	AN/BQR-19	AN/BRA-34	AN/BRD-7	AN/BRA-34	AN/BRA-21	AN/BRA-34
PRINCIPAL DIMENSIONS		A	18' - 5 1/2	12' - 7 9/16	15' - 6 1/2	15' - 6 1/8	20' - 6 1/8	20' - 8 1/8	20' - 8 1/8	12' - 7 9/16	15' - 6 1/2	20' - 3 3/8	17' - 3 1/8
		B	17' - 7 1/2	11' - 7 5/16	14' - 9 3/4	14' - 5 7/8	19' - 8 1/8	19' - 10 1/8	19' - 11 3/8	11' - 7 5/16	14' - 9 3/4	19' - 1 5/8	16' - 1 1/8
		C	15' - 10 5/8	11' - 1 7/32	13' - 9 1/8	9' - 10 9/16	17' - 11 1/4	18' - 1 1/4	13' - 8 3/8	11' - 1 7/32	13' - 9 1/8	15' - 10 3/4	15' - 1 3/8
		D	12' - 7	8' - 3 19/32	10' - 3 1/2	11' - 5 15/16	14' - 7 5/8	14' - 9 5/8	15' - 3	8' - 3 19/32	10' - 3 1/2	14' - 7 3/8	12' - 0 1/8
		E	3.125	NOTE 18	2.468	2.468	3.125	3.125	2.468	NOTE 18	2.468	3.125	3.125
		F	4.000	NOTE 18	4.000	4.000	4.000	4.000	4.000	NOTE 18	4.000	4.000 REF	4.000
		G	5 1/4"	5 1/4"	5 1/4"	5 1/4"	5 1/4"	5 1/4"	5 1/4"	5 1/4"	5 1/4"	4 1/4"	4 1/4"
		~~H~~	~~4 3/8"~~	~~4 3/8"~~	~~4 3/8"~~	~~4 3/8"~~	~~4 3/8"~~	~~4 3/8"~~	~~4 3/8"~~	~~4 3/8"~~	~~4 3/8"~~	~~4 1/4"~~	~~4 1/4"~~
EQUAL FASTENER TOTAL DIMENSION SPAN	J	NO OF SP	15	5	11	3	20	20	11	5	11	16	14
		TOT SPAN	7' - 6	2' - 6	5' - 6	1' - 6	10' - 0	10' - 2	5' - 6	2' - 6	5' - 6	8' - 0	7' - 0
	K	NO OF SP	1			7	1	1	10			9	
		TOT SPAN	0' - 7 1/32			3' - 5 15/32	0' - 7 1/32	0' - 7 1/32	5' - 1 5/32			4' - 6	
	L	NO OF SP	16	4	12	12	22	22	22	4	12	20	16
		TOT SPAN	8' - 0	2' - 0	6' - 0	5' - 8	11' - 0	11' - 2	11' - 0	2' - 0	6' - 0	10' - 0	8' - 0
	~~M~~	~~NO OF SP~~	~~16~~	~~12~~	~~14~~	~~14~~	~~18~~	~~18~~	18	12	14	19	~~14~~
		~~TOT SPAN~~	~~16' - 3 7/8~~	~~10' - 3 11/16~~	~~13' - 5~~	~~13' - 2 1/4~~	~~18' - 4 1/2~~	~~18' - 6 1/2~~	18' - 7 3/4	10' - 3 11/16	13' - 5	19' - 3	~~14' - 11 1/4~~
	~~N~~	~~NO OF SP~~	~~9~~	~~9~~	~~8~~	~~9~~	~~11~~	~~11~~	11	9	8		~~9~~
		~~TOT SPAN~~	~~16' - 5 7/8~~	~~10' - 5 11/16~~	~~13' - 7~~	~~13' - 4 1/4~~	~~18' - 6 1/2~~	~~18' - 8 1/2~~	18' - 9 3/4	10' - 5 11/16	13' - 7		~~15' - 11 1/4~~
TOTAL FASTENER QUANTITY	PIECE NO.	45	8	4	8	8	8	8	8			4	8
		46								4	8		
		~~29~~	~~20~~	~~20~~	~~18~~	~~20~~	~~24~~	~~24~~	24	~~20~~	~~16~~	~~44~~	~~36~~
		~~32~~	~~38~~	~~30~~	~~34~~	~~34~~	~~42~~	~~42~~	42	~~30~~	~~34~~	~~44~~	~~36~~
		41	281	191	229	230	280	280	281	191	229	276	248
		42	47	35	41	42	52	52	53	35	41	56	44
		66	102	78	94	94	114	114	114	78	94	110	102
		63	102	78	94	94	114	114	114	78	94	110	102
APPLICATION BY SHIPS CLASS OR HULL NO. SEE APPLICABLE SHIPS DRAWING INDEX FOR VERIFICATION			640 CLASS EXC 654	688 CLASS HULLS 688-725 & 750	681 HULL 688 CLASS, HULLS 688-725 & 750	637 CLASS EXC 673 INCL 671	627-636 CL INTERIM	598 & 599 CL INTERIM	HMCS OJIBWA SUB	688 CL HULL 751 & UP	688 CL HULL 751 & UP	640 CL	637 CL SHORT HULL

A-11 TABULATION BLOCK

A-8, B-8, C-10

DRAWN

REVIEWED

SIZE	CODE IDENT	NAVSHIPS DRAWING NO.
B	25685	SS-128-4491143

SCALE:

SH REV A B C D E F G H J K L

SH 11

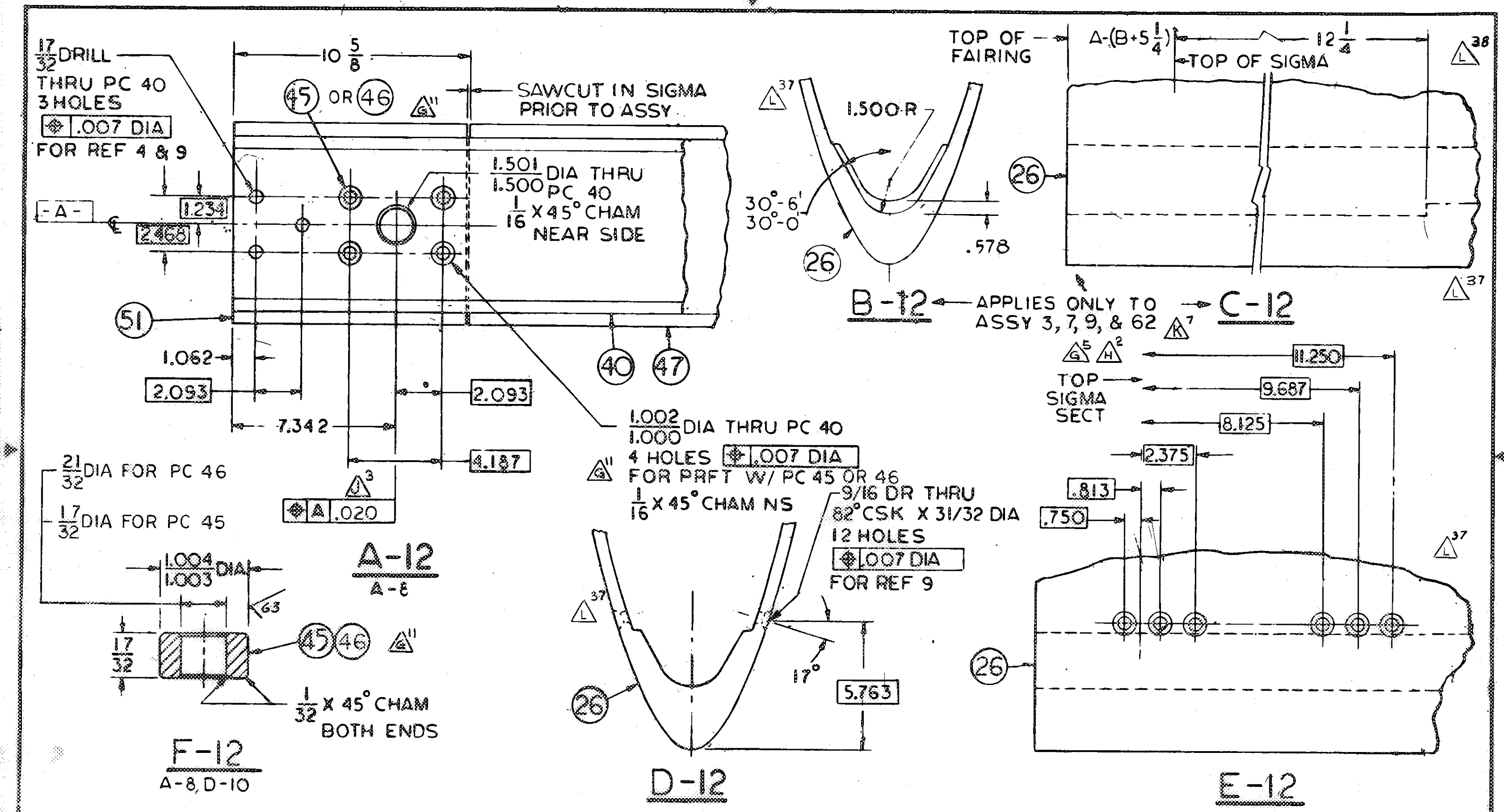

BRG MTG DETAILS	DRAWN SEF	SIZE	CODE IDENT	NAVSHIPS DRAWING NO.
	REVIEWED	B	25685	SS-128-4491143
		SCALE —	SHREV	SH 12

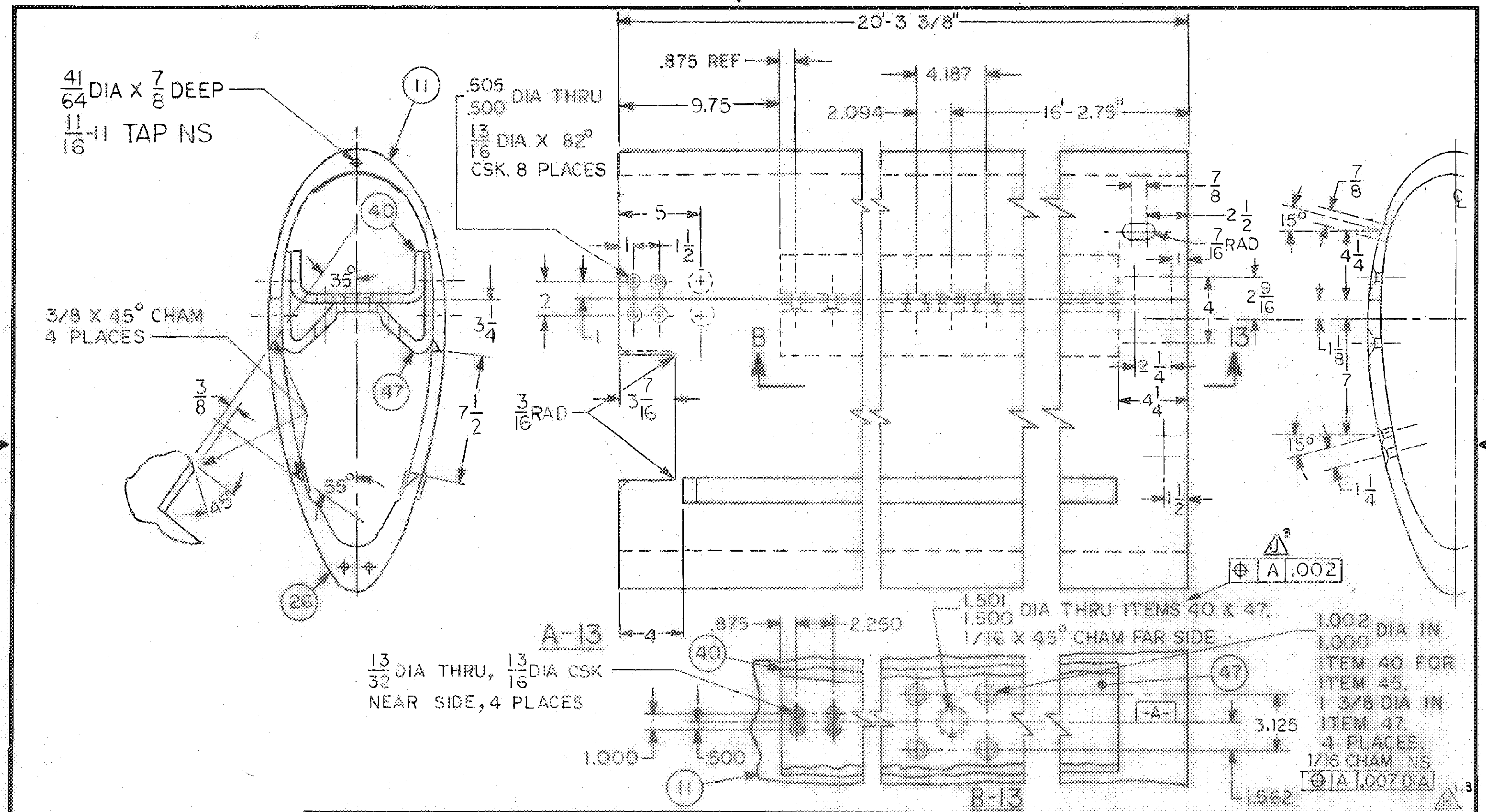

ASSEMBLY 61 FOR DIMENSIONS NOT SHOWN SEE SHEETS 6 THRU 12.

DRAWN JJM

REVIEWED

SIZE	CODE IDENT	NAVSHIPS DRAWING NO.
B	25685	SS-128-449143
SCALE: —	SH REV	SH 13

127200-A

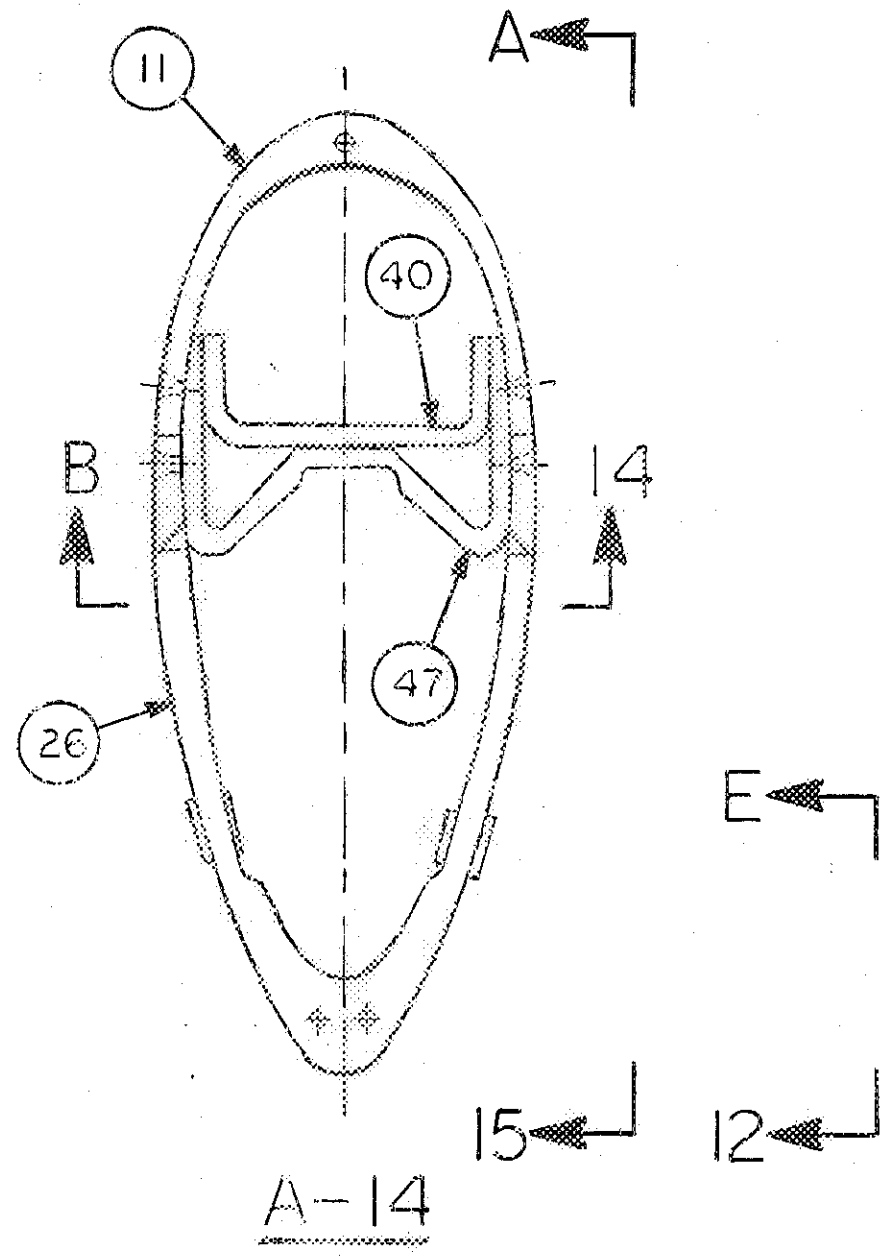

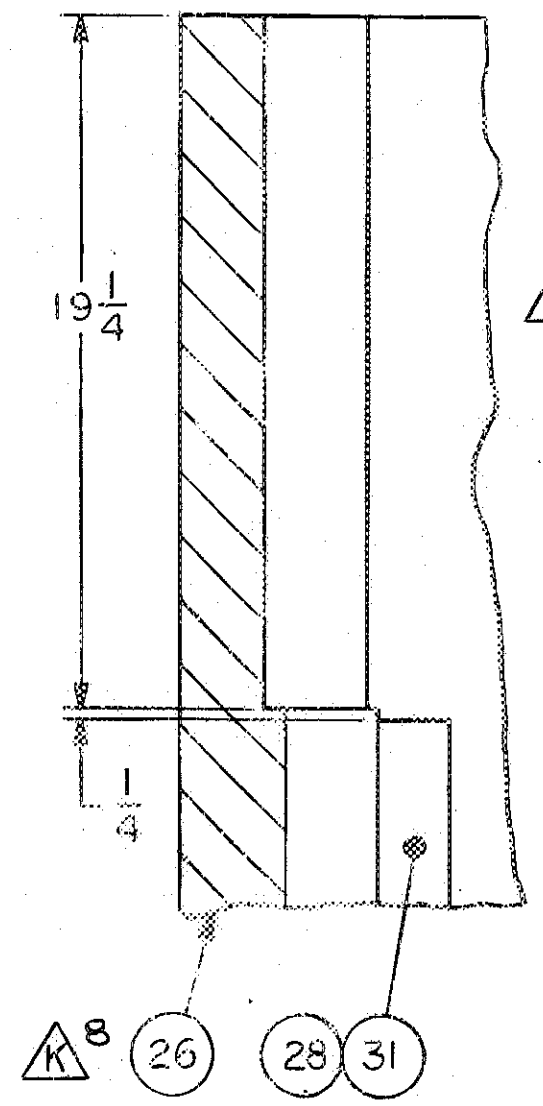

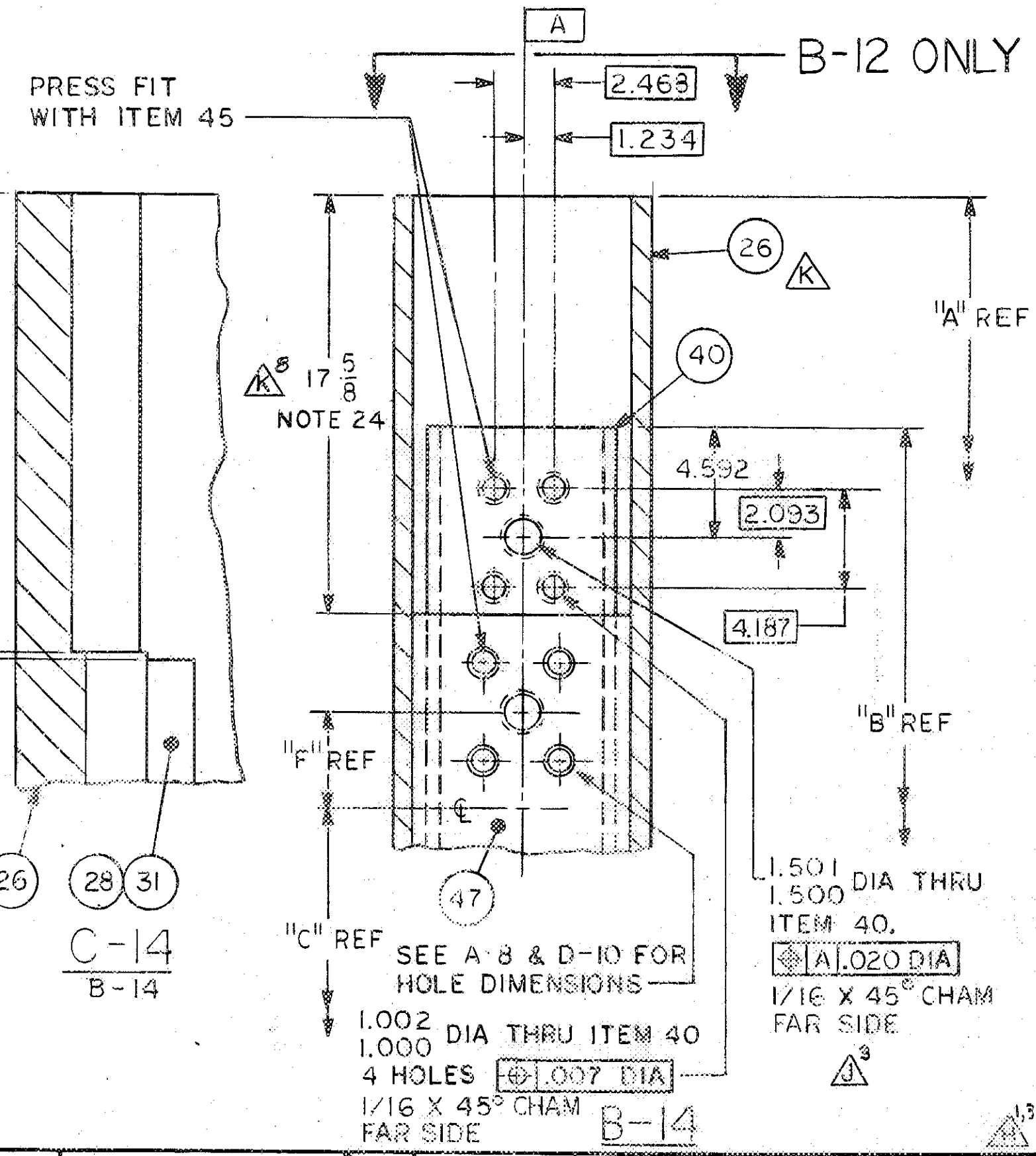

ASSEMBLY 62 FOR DIMENSIONS NOT SHOWN SEE SHEETS 6 THRU 12

DRAWN	JJM
REVIEWED	

SIZE	CODE IDENT	NAVSHIPS DRAWING NO.
B	25685	SS-128-449143
SCALE: ———		SH REV H J K SH 14

127200—A

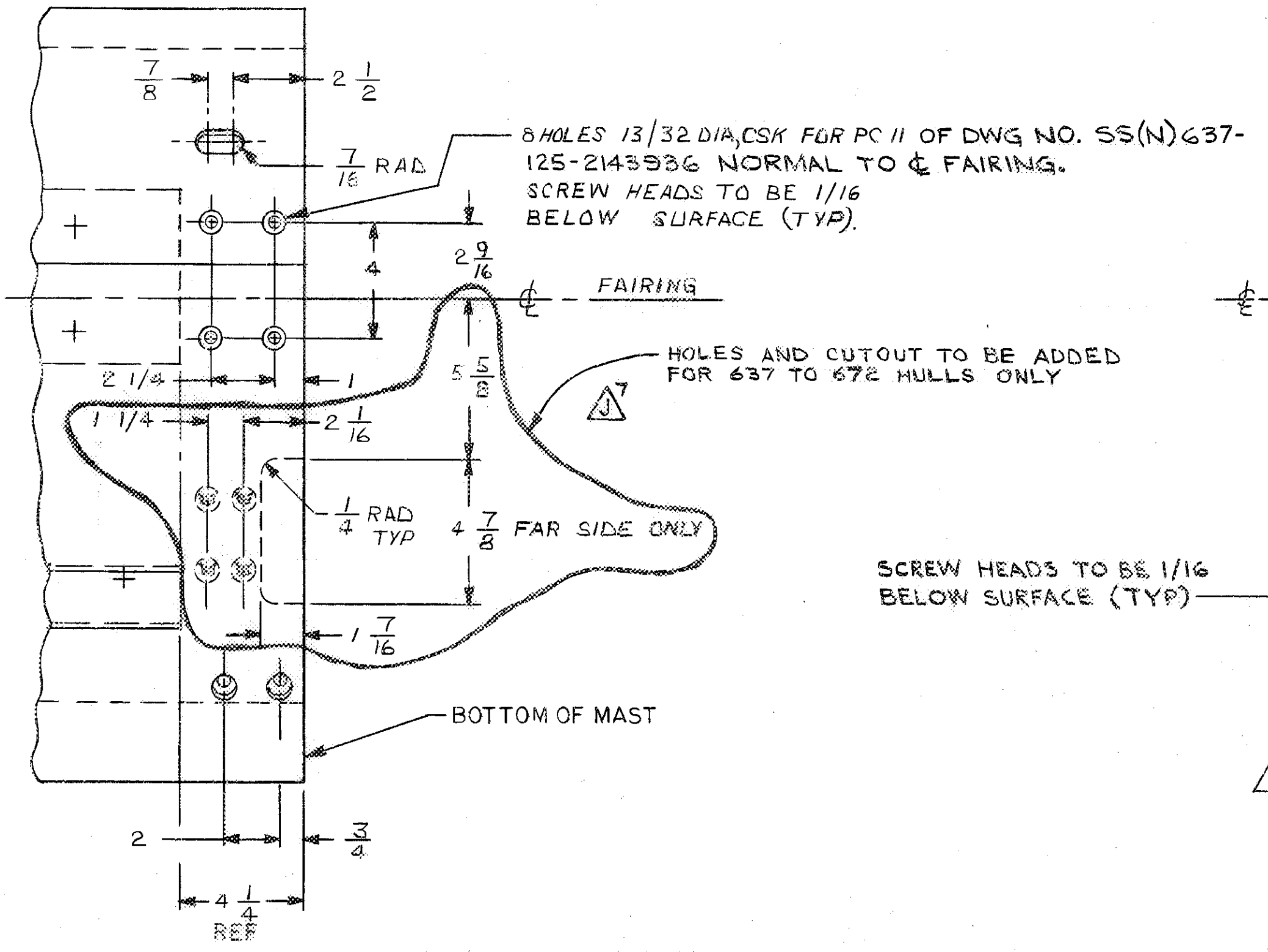

A-15
A-14

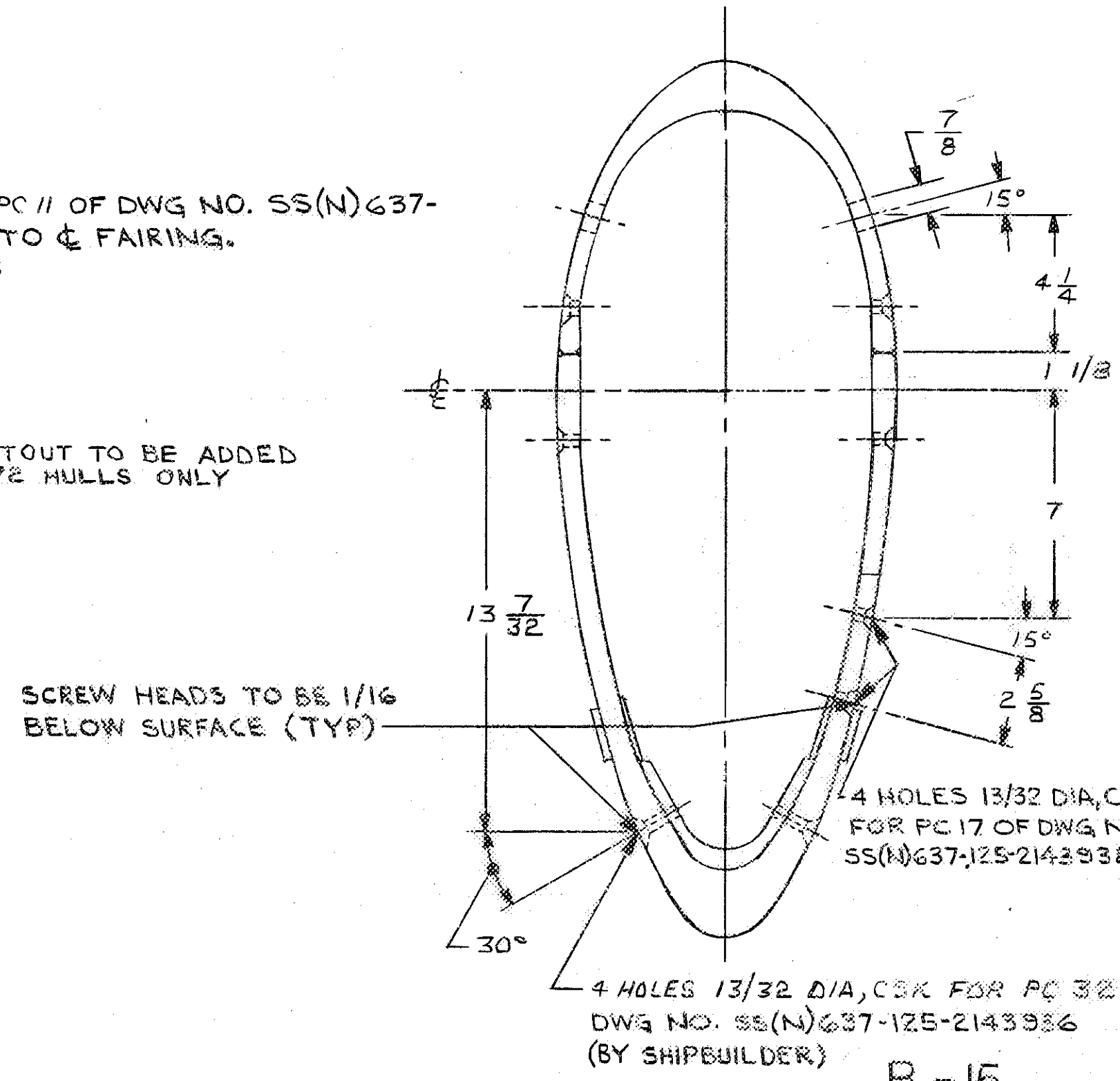

B-15
A-15

H 1,3

ASSEMBLY 62	DRAWN JIM SETARO	SIZE	CODE IDENT	NAVSHIPS DRAWING NO.
	REVIEWED	B	25685	SS-128-449143
		SCALE: NONE	SH REV H J	SH 15

N2994

REVISIONS

REV	DET SH		DATE	APPD
A	1-14	ORIGINAL ISSUE/DESIGN WORK ITEM NO 303/NHC/SEF		
B	2	(1) DET OF SHT 13 DELETED & REPLACED BY REVISION SHT.		
	3,10	(2) NOTE 18 ADDED.		
	4	(3) L/M REMARKS: PC 2 ADDED "EXCEPT 45"; PC 3, 53 WAS 59; PC 29, TYPE B ADDED.		
	5	(4) DELETED PC 44, 49, 50, 56-59; ADDED PC 45, 51.		
	6	(5) DELETED 13.422 FROM JOINT TO 1.500 RAD PT. ADDED 13.797 DIM FROM TO INSIDE OF BUILD-UP. ALSO ADDED 2.000 & 2 1/2 DIM TO CONTROL BUILD-UP. ADDED 8.812 REF DIM.		
	7	(6) DELETED 9.250 DIM.		
	8	(7) MODIFIED FEATURE CONTROLS FOR 2" & 1.500 DIA HOLES.		
		(8) DELETED PC 41 & 44 AT HST CYL MTG BRKT & SUB PC 45.		
		(9) ADDED PC 51 & CHG HOLE PATTERN NEAR TOP OF FAIRING TO SUIT NEW DET A-12 & E-12.		
		(10) IND CUT OUT OF BUILD-UP WHERE APPLICABLE.	11/4	
	10	(11) DET D-10 CHG ITEM 8 ABV.	11/16	
	11	(12) TAB DIMENSIONS CHG TO SUIT ALL ABOVE.	11-3-74	
	12	(13) COMPLETELY REVISED SHT TO SUIT ALL ABOVE AND REF 9. DES ITEM 303 BY SEF	11-3-78	
C	1	[1] ADDED STANDARD DIMENSIONAL TOLERANCES FOR PLASTICS.		
	4,11	[2] ADDED ASSEMBLIES NUMBER 4 AND 5.		
	5,7	[3] SPLINE NUT PC 41 WAS ESNA 09ND 22-080. SCREW LENGTHS CHG: PC 42 WAS 1 5/16, PC 43 WAS 2", AND PC 48 WAS 1 3/4. SHT 7 IS REDRAWN TO SHOW NEW STYLE SPLINE NUT INSTALLATION AND GENERAL NOTE 19 IS ADDED TO PROVIDE TOLERANCES ON NUT INSTALLATION.		
	6	[4] CLARIFIED WALL THICKNESS TO SHOW INCLUSION OF GROUNDING SCREEN (WALL NOT CHANGED).	7/6/71	
	8	[5] ADDED 1 1/2 MIN BETWEEN ℄ OF 2" DIA HOLE AND NEAREST SCREW.	8/28/71	
	11	[6] ASSY 3: M DIM WAS 13-6 1/8, N WAS 13-8 1/8. AUTH: DESIGN ITEMS 369 & 412 SEF	8-28-71	
	7,8	[7] ADDED END CHAMFER AT ALL BEARING AREAS.	6-28-71	
D	→	[1] ADDED ASSY 6 ON SHEETS 1, 4, 10 11. PER ITEM 412.12	9-17-71	
E	1,2	[1] ADDED TO TOLERANCE BLOCK, "SPEC---ETC---SIZES". ADDED REFS		
	3,4	13, 14 AND NOTES 20, 21. [2] PC 16 & 17 QTY WAS 26. PC 19 QTY		
	6	WAS 1. PC 21 WAS 1/16 THK. [3] ADDED * AND ** NOTES. ADDED PC 18 & 28 ON OPP SIDES OF SCREEN, SPECIFIED "CLEARANCE REQUIRED".		
	7	[4] ADDED DATUMS -C- THRU -K- WITH CONTROLS & REFERENCED NOTE 21. 26.562 ±.062 WAS 26.562 ±.025 EXTENDED SIDE BRG AREAS 2 3/4"		
	8	FWD. 5" FWD BRG AREA WAS 6". SHORTENED AFT SCRIBE FOR DATUM -A- TO SEPERATE FROM NEW DATUM -C-. [5] ADDED DATUM -C-. CLR ACCESS 3 X 7 5/8 WAS 3 X 5 3/8 AND STBD ONLY. [6] ADDED NOTE		
	9	D-9, DATUMS -C-D-E-, .605/.556 THK WAS 9/16. 7.982/7.826 WAS		
	10	7.875 [7] ADDED HOLES NO. 7 TO A-10 & E-10.		
	C-10 A-11	[8] MOVED PC 13 TO OPP SIDE FROM PC 28 AND SHOWED BY ROTATED SECTION. [9] ASSY 4: DIM C WAS 13-11 25/32, D WAS 9-4 5/16 J WAS 13 & 6'-4 1/4, K WAS BLANK, E & F WERE "NOTE 18"; ADDED 671		

REVISIONS

REV	DET SH		DATE	APPD
F	2	(1) ADDED REF 17, 18 & 19.		
	3	(2) UPDATED NOTES 5, 8 & ADDED NOTE 22 TO REFLECT CURRENT REQUIREMENTS.		
	4	(3) ADDED ASSY 7 & ITEM 36; PC NO'S 2, 3, 4 & 7: 11 THRU 55 WAS 11 THRU 53.		
	5	(4) ADDED PC. NO'S. 54 & 55		
	7,8	(5) DELETED 1/2 x 15° CHAMFER AT TOP OF MAST		
	8	(6) EXTENDED 1/2 x 15° CHAMFER ALL AROUND BOTTOM OF MAST FAIRING, ADDED SERIAL NO. PLATE & CMBL I.D. TAG, ITEMS 54, 55 & 36.		
	10	(7) A-10, FOR ASSY NO 1, 5, 6 WAS ASSY NO 1, 5, 6 & 7 ADDED 14 HOLES FOR REF 7 & 15 E-10, ASSY NO 1, 5, 6 WAS ASSY NO 1, 5, 6 & 7		
	11	(8) ADDED L/M ASSY NO 7 AUTH: CCBD #56 AND SEF 12/2/79 TASK		
G	3	(1) REVISED NOTE 21.		
	4&5	(2) IN THE LM, DELETED LEVEL "C" AS REQD. BY 0900-LP-016-4020.		
	7	(3) REMOVED A PORTION OF THE DATUM "V" SCRIBE FOR CLARITY IN DETAIL A-7.		
	9	(4) REMOVED TOLERANCE OF INSIDE ANGLE REQUIREMENT.		
	10,13	(5) ADDED ASSY 7 TO DETAILS A-10, E-10 & C-12.		
	4,5,8	(6) IN THE LM, ADDED PC 8, 9 & 46. (7) ADDED "OR 46" AT A-8.		
	11	(8) ADDED ASSY 8 & 9. (9) ADDED PC 45 & 46 TO "TOTAL FASTENER		
	11	QUANTITY". (10) ADDED APPLICATION TO ASSY 2 & 3.		
	12	(11) ADDED PC 46 AT A-12, F-12 & D-12. AUTHORITY: SAED CCBD # 68, 69 & 051383 TASK.		
H	5,12	(1) ADDED ASSY 61 & 62. (2) ADDED ASSY 9 AT B-12.		
	13-16	(3) SHEET 13 WAS REVISIONS & ADDED SHEETS 14 — 16. (4) ADDED "G" & "H" VALUES SH 11. AUTH: 021787 TASK		
J	3,5	(1) ADDED NOTE 23 FOR PC 41. (2) A-6: ADDED		
	6	± 3/32 TO 2 1/2 DIM & TOTAL WALL THK VARIATION		
	8,12	WAS ≤ 1/16. (3) AT A-8, A-12, B-13 & B-14: POSN TOL		
	13,14	.020 WAS .015 FOR 1.500 DIA. (4) ON SH 8:		
	8	ADDED ± 1/32 TO "G" DIM & ± 1/8 TO "H" DIM. ADDED DOUBLE ASTERICK (✱✱) NOTE FOR PC 13 & 34.		
	11	(5) SH 11: ADDED "SHORT NULL" TO LM ASSY 62. (6) SH 7:		
	7,15	ADDED "TOL VAR ± .05" TO ✱ NOTE. (7) SH 15: ADDED NOTE FOR HULLS. AUTH: 080388 DESIGN TASK		

REVISIONS	SIZE	CODE IDENT	NAVSHIPS DRAWING NO.
	B	25685	SS-128-449143
	SCALE:		SH REV A B C D E F G H J SH 16

REVISIONS

REV	SHEET	DESCRIPTION	BY	DATE	APPROVED
L	6	(10) DELETED ITEM 28. (11) DELETED ITEM 13, FOUR PLACES. (12) DELETED SCREEN, ITEM 27 AND CLEARANCE REQ. CALLOUT. (13) DELETED NOTE WAS; "VIEW C-10 LOCATES GROUND STRIP 28 INTO SCREEN 27. THIS VIEW A-6 LOCATES SCREEN 27 INTO MAST MOLDED SECTIONS 26 AND 11". (14) DELETED NOTE WAS; "1/16 TOTAL OF WIRE SCREEN CLOTH AND EPOXY".			
	7	(15) DELETED SCREEN, ITEM 27, (16) DELETED; "SEE NOTES 16 AND 17. (17) DELETED NOTE; "#18 (.169) DR THRU PC 26 FOR 29, LOCATE FROM PC 28". (18) DELETED ITEMS 28, 29, 31, 32 AND NOTE; " 7/32 DR, 82° CSK X 13/32 DIA FOR PC 32. STAKE AT ASSEMBLY". (19) PC 65 WAS PC 17. (20) ITEMS 64, 65 AND 66 WERE ITEMS; "16, 17 AND 43. (21) CALLOUT WAS; " 2 HOLES .375 DIA THRU PC 11 FOR PC 16 SEE NOTE 30. (22) PC 65 WAS PC 17. (23) PC 66 & 63 WAS 43 & 48. (24) ITEM 63 WAS 48, (25) NOTE WAS; "12 HOLES, P & S, .375 DIA THRU PC 26 FOR PC 16. TEMP FROM 34. SEE NOTE 30". (26) DELETED NOTE; "DR & TAP #10-24NC IN PC 28 FOR PC 32 AT ASSY, LOCATE FROM PC 31". (27) DELETED ITEMS 13, 14, 21 AND NOTE; "C-10 AND NOTE 17".			
	8	(28) ITEM 64 WAS 16 AND ITEM 65 WAS 17. (29) DELETED ITEM 31, WITH NOTE; "FOR CUT OUT SEE B-12 AS APPLICABLE" AND GROUNDING STRIP WITH DIMENSIONS. (30) DELETED ITEMS 13. 14, AND 21. (31) DETAIL E-12 WAS G-12. (32) DELETED PADS.			
	10	(33) DELETED; 'GROUND SCREEN AND " FROM TITLE BLOCK. (34) DELETED DETAIL C-10.			
	11	(35) DELETED INFORMATION IN H, M AND N BLOCKS. (36) PC NO.'S 66 AND 63 WERE; "43 AND 48". DELETED PC NO.'S 29 & 32.			
	12	(37) DELETED ITEMS 28 AND 31. (38) DELETED ¼" REF DIM. AUTH: ECP 98012 & 99016.			

REV	SHEET	DESCRIPTION	BY	DATE	APPROVED
K	1	(1) REVISED DISTRIBUTION LIST & SHEET 1 OF 17 WAS 1 OF 16.			
	2	(2) IN REF 19 SPEC WAS "6 792-022".			
	3	(3) FOR GENERAL NOTES ADDED "CONTINUED ON SHEET 5" & DELETED NOTE 14.			
	4	(4) PC. 12 & 27 WAS #12 MESH (.023). (5) ADDED PC 37 & 38. (6) PC. 16 WAS INSERT HELICOIL MS 124656, 5340-286-6600. (7) FOR PC. 36 ADDED PART NO. 6604120-2.			
	5	(8) ADDED NOTES 24 THRU 30. (9) PC. 55 REMARKS WAS "MILLER STEPHENSON CHEM. CO., DANBURY, CT. PN=907(KIT) OR EQ". (10) PC. 60 NAME WAS "CLEAR RESIN".			
	7	(11) CALLOUT FOR PC. 16, .375 DIA THRU WAS "DR & TAP" 2 PLACES.			
	8	(12) RELOCATED PC. 36 TO TOP OF FAIRING & ADDED DETAIL C-8.			
	11	(13) FOR ASSY NO. 62; "M" NO. OF SPACES WAS "16", TOTAL SPAN FOR "M" WAS "16 - 3-1/4". "N" NO. OF SPACES WAS "16", TOTAL SPAN FOR "N" WAS "16 - 7-1/4".			
	12	(14) ADDED "62" TO CALLOUT.			
	14	(15) "26" WAS "11", 2 PLACES, AND ADDED NOTE 24 TO 17-5/8 DIM.			
	17	(16) ADDED SHT 17, REVISIONS.		5/25/94	
L	1	(1) REVISED DISTRIBUTION LIST.			
	2	(2) ADDED SH 17 TO INDEX.			
	3	(3) DELETED NOTES 15, 16 AND 17.			
	4	(4) DELETED PC NO.'S 12, 13, 14, 16, 17, 21, 27, 28, 29, 31 and 32. (5) PC 37 REMARKS; 5310-00-054-5649 WAS 5305-00-052-8880.			
	5	(6) DELETED PC NO.'S 43 & 48. (7) ADDED PC NO.'S 63, 64, 65 AND 66. (8) DELETED NOTES 25, 27 AND 28. (9) NOTE 30 WAS; 'COAT INSERTS PC.16 WITH ADHESIVE PC. 55 PRIOR TO ASSEMBLY.			

REVISIONS

SIZE	CODE IDENT	NAVSHIPS DRAWING NO.
B	25685	SS-128-4491143
SCALE		SH REV L/R

SH 17 OF 17