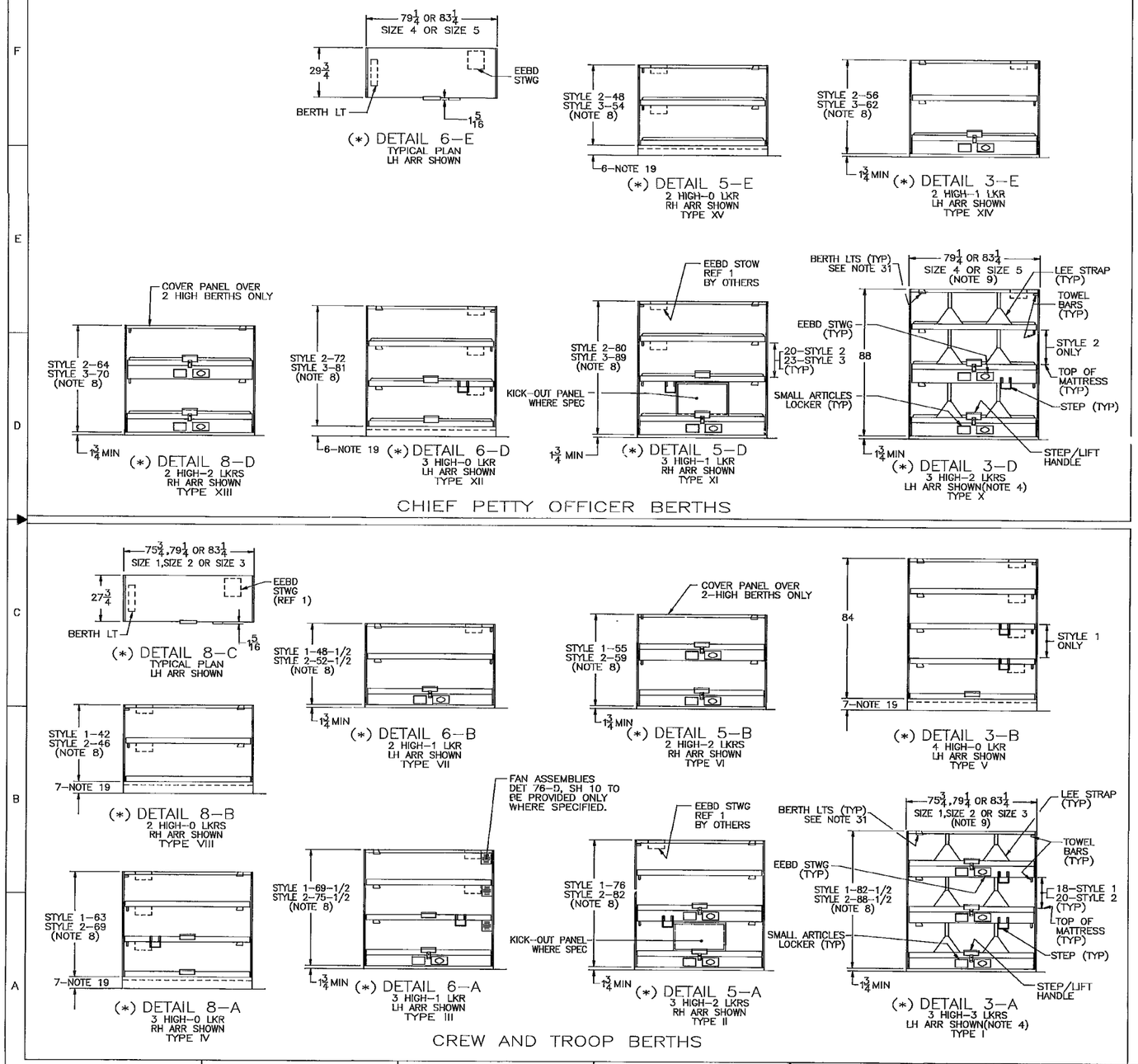


CHIEF PETTY OFFICER BERTHS




CREW AND TROOP BERTHS

REVISIONS

| ZONE | REV | DESCRIPTION | DATE | APPROVED |
|---|---|---|---|---|
| SH1-SH6 | A | MODIFIED EEBD STWG DOOR AND LOCKER DOOR; MODIFIED EEBD STWG COMPARTMENT. | 7/1/93 | MR & S |
| SH1-SH2 | | MOVED LOCATION OF BERTH STEP PC 61 AND PC 62. | | |
| 53-C | | MODIFIED DETAIL 53-C TO REFLECT CHANGE IN LENGTH OF END BRACKET PC 63. | | |
| 27-D 29-A | | ENLARGED HINGE REINFORCEMENT PC 17. | | |
| 13-B 33-A | | MODIFIED DISTANCE FROM BERTH LIGHT TO HEAD END OF BERTH AS INDICATED IN NOTE 25. | | |
| 63-D 63-B | | EDITORIAL. | | |
| SH1-SH3 SH7 | | UPDATED PARTS LIST TO REFLECT ALL CHANGES. | | |
| 2A | | UPDATED TITLE OF REF. 1, ADDED REF. 2 AND REF. 3. | | |

(*)NOTES:

1. BERTHS SHALL BE BUILT IN ACCORDANCE WITH MILITARY SPECIFICATION MIL-F-902 WHERE APPLICABLE. WHERE THE REQUIREMENTS OF THIS DRAWING DIFFER FROM THOSE OF MIL-F-902 THIS DRAWING SHALL PREVAIL.
2. MANDATORY REQUIREMENTS ARE NOTED WITH AN ASTERISK (*) ALL DIMENSIONS WITH TOLERANCES ARE MANDATORY TO SUIT NON-DEVIATION REPAIRABLE PARTS REQUIREMENTS. IT IS INTENDED THAT ASSEMBLIES AND PARTS MANUFACTURED TO THESE REQUIREMENTS WILL FACILITATE REPAIR AND/OR REPLACEMENT BY THE SHIPS' PERSONNEL. FOR OTHER REQUIREMENTS DEVIATIONS ARE PERMITTED PROVIDED MATERIAL COMPOSITION IS MAINTAINED AND FUNCTION, STRENGTH AND REPAIRABLE PARTS REQUIREMENTS ARE NOT IMPAIRED UPON APPROVAL OF NAVAL SURFACE WARFARE CENTER CODE 9724.
3. BERTHS SHALL BE INSTALLED PARALLEL TO BASE LINE OF SHIP. WHERE BERTH ASSEMBLIES ARE ARRANGED IN FAYING GROUPS THEY SHALL BE FASTENED TOGETHER TO PREVENT VIBRATION AND RATTLING AND FOR INCREASED STRENGTH OF THE GROUP.

(NOTES CONTINUED ON SH 2)

| QTY REQ | PC NO | DESCRIPTION | MATERIAL | MATL SPEC | REMARKS | ZONE | SH NO |
|---|---|---|---|---|---|---|---|
| | 24 | PROP (TUBE) | AL-6063-T6 | QQ-A-200/8 | 3/4 OD X 5/8 ID | 35B | 5 |
| | 23 | STAPLE | STL,ZINC CTD | ASTM-A36 | | 39C | 5 |
| | 22 | HASP | STL,ZINC CTD CRES PIN | ASTM-A36 AISI CL 304 | | 37A | 5 |
| | 21 | BOTTOM PNL, BERTH | AL-5052-H32 | QQ-A-250/8 | | 39E | 5 |
| | 20 | BERTH RAIL, 1-1/4 H | AL-6063-T5 | QQ-A-200/9 | EXTRUSION | 35E, 38C | 5 |
| | 19 | BERTH RAIL, 3-1/4 H | AL-6063-T5 | QQ-A-200/9 | EXTRUSION | 35E, 37C | 5 |
| | 18 | HINGE | STL,ZINC CTD CRES PIN | ASTM-A36 AISI CL 304 | | 35A, 35E | 5 |
| | 17 | REINF, HINGE | AL-5052-H32 | QQ-A-250/8 | FOR PC 18 | 26C, 27D, 29A | 4 |
| | 16 | STAPLE, FOR PC 13 | STEEL | ASTM-A36 | | 30D, 38B | 4/5 |
| | 15 | STAPLE, FOR PC 13 | STEEL | ASTM-A36 | | 30D, 38A | 4/5 |
| | 14 | HINGE, CONTINUOUS | AL/CRES | COML | LG TO SUIT NOTE 10 | 30D, 47C | 4/6 |
| | 13 | DOOR,COVER, SMALL ARTICLES LKR | AL-5052-H32 | QQ-A-250/8 | | 30D | 4 |
| | 12 | BODY,LOCKER | AL-5052-H32 | QQ-A-250/8 | | 27D | 4 |
| | 11 | FRONT, LKR, CPO | AL-6063-T5 | QQ-A-200/9 | EXTRUSION | 27D, 28A | 4 |
| | 10 | FRONT, LKR, CREW | AL-6063-T5 | QQ-A-200/9 | EXTRUSION | 27D, 28A | 4 |
| | 9 | BACK PANEL, TOP | AL-5052-H32 | QQ-A-250/8 | FOR BERTH W/OUT LOCKER-NOTE 5,6 | 22D | 3 |
| | 8 | BACK PNL, INTMD | AL-5052-H32 | QQ-A-250/8 | FOR BERTH W/OUT LOCKER-NOTE 5,6 | 22D | 3 |
| | 7 | BACK PNL, BOTTOM | AL-5052-H32 | QQ-A-250/8 | FOR BERTH W/OUT LOCKER-NOTE 5,6 | 22D | 3 |
| | 6 | BACK PANEL, TOP | AL-5052-H32 | QQ-A-250/8 | FOR BERTH WITH LOCKER-NOTE 5,6 | 22A | 3 |
| | 5 | BACK PNL, INTMD | AL-5052-H32 | QQ-A-250/8 | FOR BERTH WITH LOCKER-NOTE 5,6 | 22A | 3 |
| | 4 | BACK PANEL, BOTTOM | AL-5052-H32 | QQ-A-250/8 | FOR BERTH WITH LOCKER-NOTE 5,6 | 22A | 3 |
| | 3 | RAIL, BOTTOM HD/FT BOARD | AL-6063-T5 | QQ-A-200/9 | EXTRUSION | 19E, 20A | 3 |
| | 2 | RAIL, INTMD HD/FT BOARD | AL-6063-T5 | QQ-A-200/9 | EXTRUSION | 19F, 20A | 3 |
| | 1 | STILE, HD/FT BOARD | AL-6063-T5 | QQ-A-200/9 | EXTRUSION | 19D, 20A | 3 |

(*)PARTS LIST

REFERENCE DRAWINGS

| REF NO | DRAWING TITLE | DRAWING NO |
|---|---|---|
| 1 | CONTAINER, STOWAGE EEBD | 803-5751208 |
| 2 | CURTAIN, BERTH | DOD-C-24556 |
| 3 | MATTRESS AND MATTRESS TICKS, BERTH, SYNTHETIC CELLULAR RUBBER | MIL-M-18351 |

| 10 | 9 | 8 | 7 | 6 | 5 | 4 | 3 | 2 | 1 | SH | REVISION STATUS OF SHEETS |
|---|---|---|---|---|---|---|---|---|---|---|---|
| A | A | A | A | A | A | A | A | A | A | REV | |

TYPE DRAWING

APPROVED FOR PUBLIC RELEASE DISTRIBUTION IS UNLIMITED

UNLESS OTHERWISE NOTED, DIMENSIONS ARE IN "INCHES". TOLERANCES ARE IN ACCORDANCE WITH COMMERCIAL PRACTICE UNLESS OTHERWISE INDICATED ON DRAWING

CONTRACT NO.

PREP ACTIVITY FSCM

| | SIGNATURE | DATE |
|---|---|---|
| PREPARED | MR & S | 3-87 |
| CHECKED | MED | 4-87 |
| HD ENGR | T. DADE | 4-87 |

NAVY APPROVAL

PROJ ENGR
BR. HD
DIV. DIR
SR REP CDR
APPV'D FOR COMMANDER NAVSEA

DEPARTMENT OF THE NAVY — WASHINGTON, D.C. 20362-5101
NAVAL SEA SYSTEMS COMMAND

BERTH,MODULAR, LIGHTWEIGHT

| SIZE | CAGE CODE | ESWBS | DRAWING NO. | REV |
|---|---|---|---|---|
| F | 53711 | 804 | 5959312 | A |

SCALE:1/2=1 FT — WEIGHT:NOTE 20 — SHEET 1 OF 10

DRAWING NO. 804-5959312 SH 1 REV A

804-5959312 SH 1

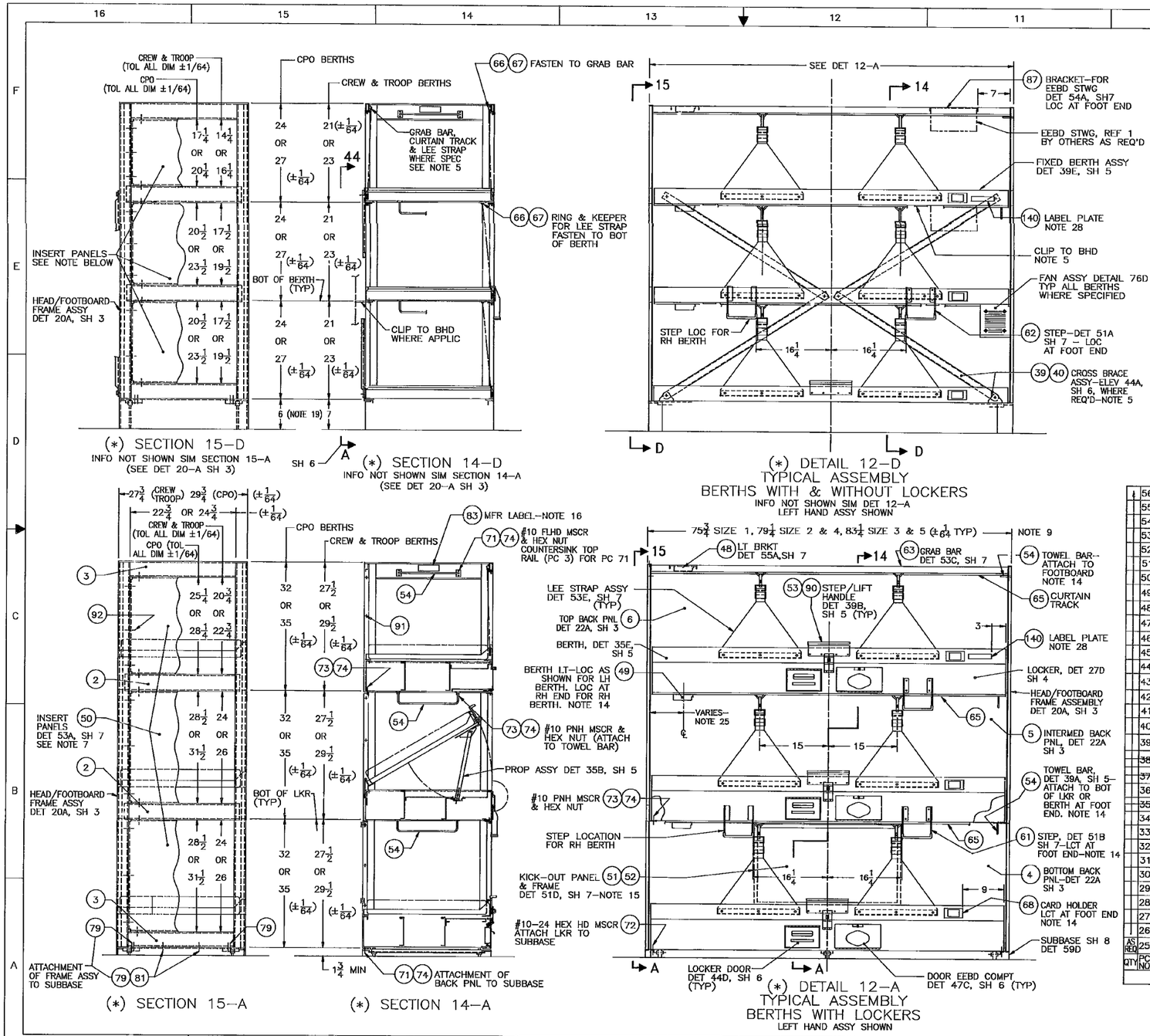


## REVISIONS

| ZONE | REV | DESCRIPTION | DATE | APPROVED |
|---|---|---|---|---|
| 53E | A | REMOVED ATTACHED NOTE TO PC 60 TO REFLECT CHANGE IN EYELET USE. | 7/1/93 | MR & S |
| 37D 33B | | ADDED DETAIL 37–D. | | |
| SH8 | | MODIFIED DETAIL 63–B, 63–F, 63–E, 69–A AND 60–A TO REFLECT CHANGE IN MATERIAL THICKNESS AND SUBBASE SEAL. | | |
| 67A 70C | | ADDED NOTE REFERENCE TO DETAIL 67–A AND 70–C. | | |
| SH10 | | ADDED PC 317 AND PC 318 TO DETAIL 75–D. MODIFIED PARTS LIST. | | |
| SH6 SH8 | | ADDED NOTES 25, 26, 27, 28, 29, 30, 31 AND 32. MODIFIED NOTE 21. | | |
| SH1 SH2 | | ADDED STEP/LIFT HANDLES AND/OR STEPS TO DETAILS 3–A, 6–A, 8–A, 5–D, 6–D AND 12–A. | | |
| SH1 | | REMOVED LEE STRAPS IN ALL DETAILS EXCEPT DETAILS 3–A AND 5–D. | | |
| SH4 | | MODIFIED NOTES 9 AND 17. | | |

## (*)NOTES (CONTD)

4. THE HEAD & FOOT BOARDS, DETAIL 20A, SHEET 3 ARE IDENTICAL IN ALL LIKE ASSEMBLIES. THEIR FUNCTION AS A HEAD OR FOOTBOARD IS DETERMINED BY THE LOCATIONS OF THE VARIOUS ACCESSORIES AT INSTALLATION.

5. WHERE BACK OF THE BERTH IS ADJACENT TO BULKHEAD OR SHELL THE BACK PANELS MAY BE OMITTED FOR WEIGHT REDUCTION AND/OR ACCESS BEHIND THE BERTH. WHERE BACK PANELS ARE OMITTED THE BERTH ASSEMBLY SHALL BE RIGIDIZED BY THE USE OF CLIPS FASTENED TO THE BULKHEAD OR BY THE USE OF CROSS BRACING WHERE ATTACHMENT TO THE BULKHEAD OR SHELL FRAMING IS IMPRACTICAL, AS SHOWN IN DETAIL 12D THIS SHEET. A GRAB BAR, PC 63 SHALL ALSO BE INSTALLED AT THE BACK BETWEEN HEAD AND FOOTBOARD. THE OPEN BACK AREA MAY BE FITTED WITH CURTAINS FOR AESTHETICS OR BLOCK–OUT OF LIGHT.

6. IN BACK–TO–BACK INSTALLATIONS THE BACK PANELS ON ONE ASSEMBLY MAY BE OMITTED FOR WEIGHT REDUCTION. WHERE A KICK–OUT ESCAPE PANEL IS INSTALLED BETWEEN ADJOINING BERTHS THE BACK PANEL SHALL BE OMITTED ON ONE ASSEMBLY.

(NOTES CONTINUED ON SH 3)

## (*)PARTS LIST (CONTD)

| QTY AS REQD | PC NO | DESCRIPTION | MATERIAL | MATL SPEC | REMARKS | ZONE | SH |
|---|---|---|---|---|---|---|---|
| | 56 | BUCKLE | STL, ZINC CTD | ASTM–A36 | | 53E, 54F | 7 |
| | 55 | HOOK, BOLT SNAP | STL, NKL PLD | COML | NOTE 17 | 53E | 7 |
| | 54 | TOWEL BAR | CRES | AISI CL 304 | | 12A, 39A | 2/5 |
| | 53 | STEP/LIFT HANDLE | AL–6063–T5 | QQ–A–200/9 | EXTRUSION(CREW) | 12A, 39B | 2/5 |
| | 52 | PANEL, KICK–OUT | AL–5052–H32 | QQ–A–250/8 | NOTE 15 | 12A, 51D | 2/7 |
| | 51 | FR, KICK–OUT PNL | AL–6063–T5 | QQ–A–200/9 | EXTRUSION NOTE 15 | 12A, 51D | 2/7 |
| | 50 | INSERT PANEL | AL–5052–H32 | QQ–A–250/8 | FOR HEAD/FOOT BD | 15A, 53A | 2/7 |
| | 49 | BERTH LIGHT | VARIES | MIL–F–16377/17A | NOTE 31 | 55A | 7 |
| | 48 | BRACKET, BERTH LT | AL–5052–H32 | QQ–A–250/8 | | 55A | 7 |
| | 47 | CLIP | STL OR AL | ASTM A–36 QQ–A–250/8 | | 63B | 8 |
| | 46 | HEX NUT, 1/2–13 | STL, ZINC CTD | COML | 1/2–13 UNC–2B | 63D, 63E | 8 |
| | 45 | SOCKET, STUD | AL–6061–T651 | QQ–A–200/8 | TAP THRU 1/2–13 UNC 2B | 63D | 8 |
| | 44 | STUD, FULLY THD | STEEL | ASTM–A307 | 1/2–13 UNC 2A | 63D | 8 |
| | 43 | STUD, WELDING | STEEL | MIL–S–24149/1 | 1/2–13, TYII, CL 1 UNC 2A | 63E | 8 |
| | 42 | SUBBASE TRIM(AL DK) | STEEL | ASTM–A36 | 2–3/8 H | 63D | 8 |
| | 41 | SUBBASE TRIM(STL DK) | STEEL | ASTM–A36 | 1–3/4 H | 63E | 8 |
| | 40 | BRACKET, CROSS BRACE | STEEL | ASTM–A36 | | 43B, 44A | 6 |
| | 39 | CROSS BRACE | AL–6063–T5 | QQ–A–200/9 | 1–1/2 X 1–1/2 X 1/8 CHANNEL | 43A, 44A | 6 |
| | ~~38~~ | ~~LABEL,"PULL"~~ | ~~AL~~ | ~~MIL–P–15024/5~~ | | ~~47B, 46B~~ | ~~6~~ |
| | ~~37~~ | ~~LABEL,"EMERG ESC"~~ | ~~AL~~ | ~~MIL–P–15024/5~~ | | ~~47B, 46C~~ | ~~6~~ |
| | 36 | CUSHIONING | FOAMED LATEX | MIL–R–20092 | 1 X 1 SQUARE, TYII | 47C | 6 |
| | ~~35~~ | ~~CATCH, FRICTION~~ | ~~BRASS/STL~~ | ~~FF–H–111C~~ | ~~SIM TY 1071~~ | ~~47D~~ | ~~6~~ |
| | 34 | DOOR, EEBD STOW | AL–5052–H32 | QQ–A–250/8 | | 47D | 6 |
| | 33 | COVER PANEL | AL–5052–H32 | QQ–A–250/8 | FOR 2–HIGH BERTHS | 48A | 6 |
| | 32 | BUMPER | RUBBER | COML | NOTE 13 | 44D | 6 |
| | 31 | LOCK, COMBINATION | VARIES | COML | NOTE 12 | 44D | 6 |
| | 30 | DOOR FRAME | AL–5052–H32 | QQ–A–250/8 | | 44D | 6 |
| | 29 | WASHER | STL, ZINC CTD | COML | 3/16 DIA–FLAT | 35C | 5 |
| | 28 | WASHER | NYLON | COML | 3/4 OD X 17/64 ID X 1/16 | 35B | 5 |
| | 27 | PIN, STOP | STL, ZINC CTD | COML | NOTE 11 | 35B | 5 |
| | 26 | PROP TIP | NYLON | COML | | 35B | 5 |
| | 25 | PROP BRACKET | STL, ZINC CTD | ASTM–A36 | | 35B | 5 |

| SIZE | FSCM NO. | SHBS | NAVSEA DRAWING NO. | REV. |
|---|---|---|---|---|
| F | 53711 | 804 | 5959312 | A |
| SCALE: NONE | | | SH. 2 OF 10 | |

DRAWING NO. 804–5959312 SH 2 REV A

804–5959312 SH 2

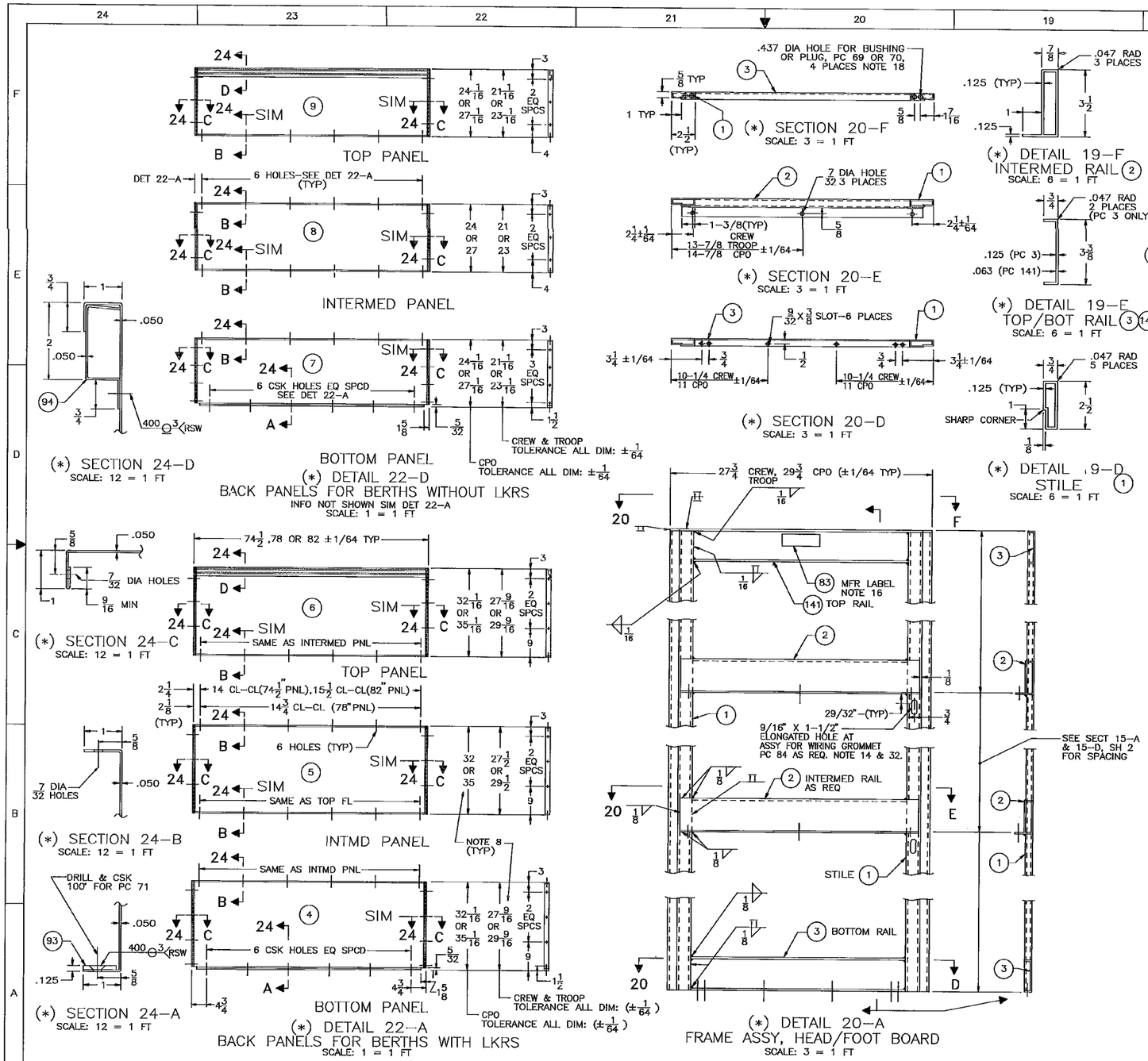


## REVISIONS

| ZONE | REV | DESCRIPTION | DATE | APPROVED |
|---|---|---|---|---|
| 73D | A | MODIFIED NOTE 104. | 7/1/93 | MR & S |
| 13A 13D 53C | | REMOVED GRAB BAR SUPPORT. | | |
| 3A 6A 8BC 3D 14C 53E | | EDITORIAL. | | |
| 19E 20A 56E | | MODIFIED TOP RAIL THICKNESS, HOLE AT ASSY FOR WIRING GROMMET, DETAIL 53–E AND PARTS LIST TO REFLECT CHANGE IN BERTH LIGHT FROM SYSMBOL 232 TO SYMBOL 232.1. | | |

## (*)NOTES (CONTD)

7. WHERE THE HEAD AND/OR FOOT OF A BERTH ASSEMBLY IS LOCATED ADJACENT TO A BULKHEAD OR THE END OR BACK OF ANOTHER BERTH, THE INSERT PANELS, PC 50, OF THAT ASSEMBLY MAY BE OMITTED FOR WEIGHT REDUCTION OR ACCESS.
8. THROUGHOUT THIS DRAWING WHEREVER DUAL DIMENSIONS ARE SHOWN FOR HEIGHTS OF VARIOUS COMPONENTS THESE DIMENSIONS PROVIDE CLEAR HEIGHTS ABOVE THE TOP OF THE MATTRESS OF 18 OR 20 INCHES FOR CREW BERTHS AND 20 OR 23 INCHES FOR CPO BERTHS. PROCURING ACTIVITY SHALL SPECIFY HEIGHT REQUIRED.

(NOTES CONTINUED ON SH 4)
PARTS LIST CONTINUED ON SH 7

## (*) PARTS LIST (CONTD)

| AS REQ | ITEM NO | DESCRIPTION | MATERIAL | MATL SPEC | REMARKS | ZONE | SHEET NO |
|---|---|---|---|---|---|---|---|
| | 96 | END PANEL | AL 5052–H32 | QQ–A–250/8 | | 26C, 27D | 4 |
| | 95 | PARTITION | AL 5052–H32 | QQ–A–250/8 | | 27C, 27D | 4 |
| | 94 | STIFFENER | AL 5052–H32 | QQ–A–250/8 | | 24D | 3 |
| | 93 | SPACER | AL 5052–H32 | QQ–A–250/8 | .125 THK X 7/8 | 24A | 3 |
| | 92 | RIVET, BLIND | ALUM/STL MANDREL | MIL–R–24243/10 | 1/8" DIA | | |
| | 91 | RIVET, BLIND | ALUM/STL MANDREL | MIL–R–24243/10 | 3/16" DIA | | |
| | 90 | STEP/LIFT HANDLE | AL 6063–T5 | QQ–A–200/9 | EXTRUSION–(CPO) | 12A, 39B | 2/5 |
| | 89 | GROMMET | RUBBER | COML | 55 DUROMETER | 55A, 56E | 7 |
| | 88 | FLASHING | STEEL | ASTM–A36 | | 59D, 63B | 8 |
| | 87 | BRACKET, EEBD STWG | AL 5052–H32 | QQ–A–250/8 | | 54A | 7 |
| | 86 | WASHER, 1/4 FLAT | CRES | COML | | 46B,47B | 6 |
| | ~~85~~ | ~~BUMPER~~ | ~~RUBBER~~ | ~~COML~~ | | ~~43D~~ | ~~6~~ |
| | 84 | GROMMET | RUBBER | COML | 55 DUROMETER | 20A | 3 |
| | 83 | LABEL, MFR | AL | COML | NOTE 16 | 14A, 20A | 3 |
| | 82 | #4–40 CSK OHD MSCR | CRES | COML | | | |
| | 81 | 1/4–20 HEX NUT | CRES | COML | SELF–LOCKING | | |
| | 80 | 1/4–20 CSK FLH MSCR | CRES | COML | 100° CSK | | |
| | 79 | 1/4–20 HEX HD MSCR | CRES | COML | | | |
| | 78 | #8–32 HEX NUT | CRES | COML | SELF–LOCKING | | |
| | 77 | #8–32 CSK FLH MSCR | CRES | COML | | | |
| | 76 | #8–32 PNH MSCR | CRES | COML | | | |
| | 75 | #10 FLAT WASHER | CRES | COML | | | |
| | 74 | #10–24 HEX NUT | CRES | COML | SELF–LOCKING | | |
| | 73 | #10–24 PNH MSCR | CRES | COML | | | |
| | 72 | #10–24 HEX HD MSCR | CRES | COML | | | |
| | 71 | #10–24 CSK FLH MSCR | CRES | COML | 100° CSK | | |
| | 70 | HOLE PLUG | NYLON | COML | NOTE 18 | 20F | 3 |
| | 69 | BUSHING | NYLON | COML | NOTE 18 | 20F | 3 |
| | 68 | CARD HOLDER | BRASS | COML | | 56C | 7 |
| | 67 | KEEPER, RING | CRES | AISI CL 304 | | 55D, 14D | 2/7 |
| | 66 | RING | CRES | AISI CL 304 | FOR LEE STRAP | 56F, 14D | 2/7 |
| | 65 | CURTAIN TRACK | AL | DOD–C–24556 (SH) | STYLE A | 53C, 12A | 2/7 |
| | 64 | END BRKT–FOR PC 63 | STEEL | ASTM–A36 | | 53C | 7 |
| | 63 | GRAB BAR | STEEL | ASTM–A513 | 1–1/2 X 1 X 11GA TUBE | 53C | 7 |
| | 62 | STEP | STEEL | ASTM–A36 | FOR BERTH RAIL | 12D, 51A | 7 |
| | 61 | STEP | STEEL | ASTM–A36 | FOR LKR FRONT | 12A, 51B | 7 |
| | 60 | EYELET | AL | COML | FOR 3/16 DIA BOLT | 53E | 7 |
| | 59 | 1 X 1/8 FB | AL 6063–T5 | QQ–A–200/9 | | 53E | 7 |
| | 58 | CLOTH, DUCK | COTTON | CCC–C–443 | 11.16 OZ | 53E | 7 |
| | 57 | WEBBING, 2"WIDE | COTTON | MIL–W–530 | TYPE III, CL 1 | 53E | 7 |

| SIZE | FSCM NO. | SWBS | NAVSEA DRAWING NO. | REV. |
|---|---|---|---|---|
| F | 53711 | 804 | 5959312 | A |
| SCALE: AS NOTED | | | SHL 3 OF 10 | |

804–5959312 SH. 3

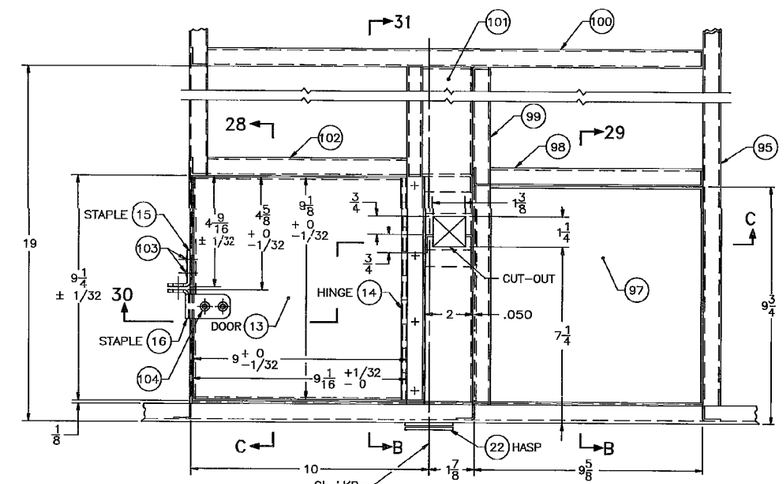


(*) DETAIL 30-D
SCALE: 6 = 1 FT

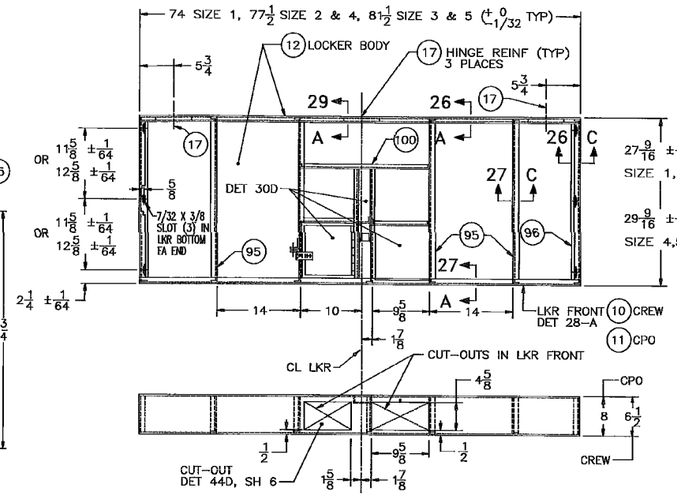


(*) DETAIL 27-D
LOCKER
SCALE: 1 1/2 = 1 FT

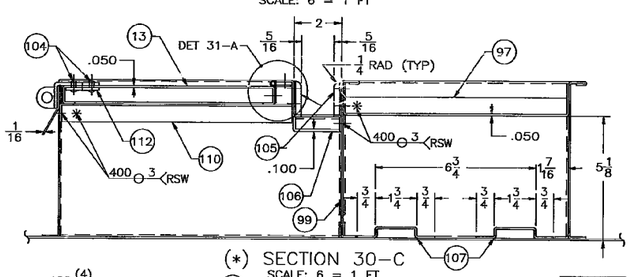


(*) SECTION 30-C
SCALE: 6 = 1 FT

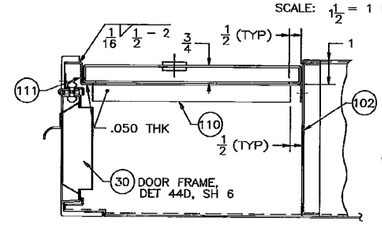


(*) SECTION 28-C
SCALE: 6 = 1 FT

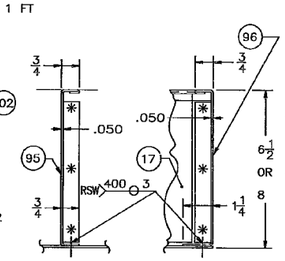


(*) SECTION 27-C
TYP PTN
SCALE: 6 = 1 FT

(*) SECTION 26-C
LKR END
SCALE: 6 = 1 FT

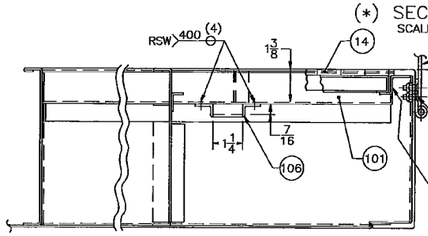


(*) SECTION 31-B
SCALE: 6 = 1 FT

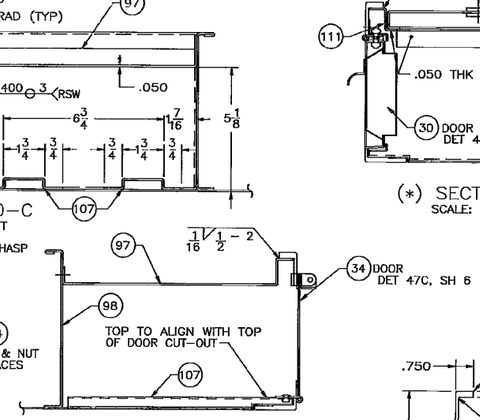


(*) SECTION 29-B
SCALE: 6 = 1 FT

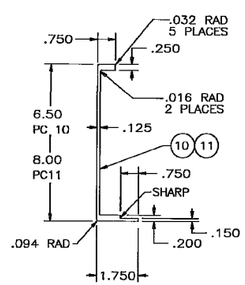


(*) DETAIL 28-A
LOCKER FRONT
SCALE: 6 = 1 FT

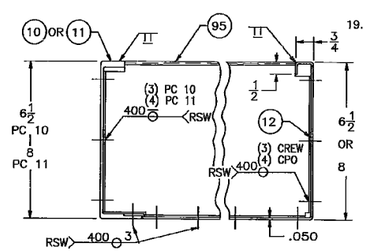


(*) SECTION 27-A
LKR FRONT
SCALE: 6 = 1 FT

(*) SECTION 26-A
LKR BACK
SCALE: 6 = 1 FT

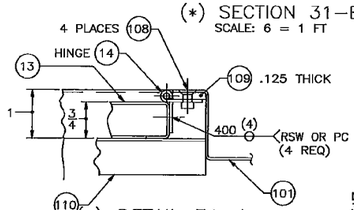


(*) DETAIL 31-A
SCALE: 12 = 1 FT

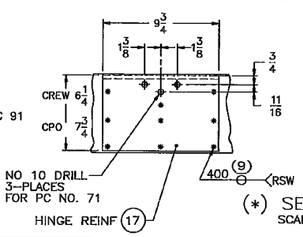


(*) SECTION 29-A
SCALE: 3 = 1 FT




## (*)NOTES (CONTD)

9. BERTH SIZES NOTED THROUGHOUT THE DRAWING ARE RELATIVE TO MATTRESS SIZES AS FOLLOWS (SEE REF 3):

   SIZE 1–26 X 72–1/2 X 3 INCH MATTRESS
   SIZE 2–26 X 76 X 3 INCH MATTRESS
   SIZE 3–26 X 80 X 3 INCH MATTRESS
   SIZE 4–28 X 76 X 4 INCH MATTRESS
   SIZE 5–28 X 80 X 4 INCH MATTRESS

10. HINGE, PC 14 SHALL BE 1–1/2 INCH OPEN WIDTH CONTINUOUS HINGE WITH .050 INCH THICK ALUMINUM LEAVES AND 1/8 INCH DIAMETER CRES PIN.

11. STOP PIN, PC 27 TO BE SPRING PIN .187 DIA BY 1–3/4 LONG. PIN SHALL FIT SECURELY THROUGH PROP & PROP TIP, PC 24 & 26 TO ACT AS CENTERING GUIDE IN PROP TROUGH.

12. COMBINATION LOCK, PC 31 SHALL BE MODEL SME PUSHBUTTON LOCK AS MFD BY SIMPLEX SECURITY SYSTEMS, INC., COLLINSVILLE CT., OR EQ.

13. DOOR BUMPER, PC 32 TO BE SIMILAR TO PC 29, REF 1, EXCEPT BUMPER SURFACE TO BE 1/16 INCH THICK, FLAT IN LIEU OF 3/16 INCH THICK, SPHERICAL.

14. ITEMS REFERRING TO THIS NOTE SHALL BE LOCATED AND INSTALLED RELATIVE TO THE POSITION OF THE HEAD AND FOOT OF BERTH ASSEMBLY.

15. KICK–OUT PANEL & FRAME, PC 51 & 52 SHALL BE INSTALLED IN THE BOTTOM BACK PANEL OF THE BERTH ASSEMBLY AS DETERMINED BY THE COMPARTMENT ARRANGEMENT FOR PERSONNEL EMERGENCY ESCAPE.

16. MANUFACTURER'S LABEL, PC 83 SHALL BE STAMPED ALUMINUM AND SHALL CONTAIN THE FOLLOWING:
    MANUFACTURER'S IDENTIFICATION, THIS DWG NUMBER WITH TYPE, SIZE & STYLE, STOCK NUMBER IF ANY, AND CONTRACT OR ORDER NUMBER AND DATE.

    LABEL SHALL BE AFFIXED TO THE INNER SIDE OF THE TOP RAIL OF EACH HEAD/FOOTBOARD FRAME ASSEMBLY, DETAIL 20A, SH 3 WITH EPOXY RESIN BASE ADHESIVE MILITARY SPECIFICATION MIL–A–47284.

17. SNAP HOOK, PC 55 SHALL BE SQUARE RIGID EYE BOLT SNAP FOR INSTALLATION ON 2 INCH WIDE STRAP. OVERALL LENGTH ABOUT 4 INCHES.

18. BUSHING AND HOLE PLUG, PC 69 & 70 TO BE ELECTRICAL INSULATING TYPE WITH TABS FOR LOCKING IN .468 INCH DIAMETER HOLE. BUSHING TO HAVE INSIDE DIAMETER SUITABLE FOR .399 INCH DIAMETER BERTH LIGHT CABLE. BUSHING, PC 69, SHALL BE HEYCO SHORTY BUSHING PART NO. 2817 OR EQUAL. PLUG, PC 70, SHALL BE HEYCO SHORTY PLUG PART NO. 1669 OR EQUAL.

19. SUBBASE HEIGHTS REFERRING TO THIS NOTE PROVIDE A HEIGHT OF 10 INCHES FROM THE DECK TO THE TOP OF A 3 INCH THICK MATTRESS FOR CREW BERTHS AND A 4 INCH THICK MATTRESS FOR CPO BERTHS.

(NOTES CONT ON SH 5)

REVISIONS

| ZONE | REV | DESCRIPTION | DATE | APPROVED |
|---|---|---|---|---|
| | | | | |

| SIZE | FSCM NO. | SWBS | NAVSEA DRAWING NO. | REV. |
|---|---|---|---|---|
| F | 53711 | 804 | 5959312 | A |
| SCALE: AS NOTED | | | SHL 4 OF 10 | |

DRAWING NO. 804–5959312 SH 4 REV A

804–5959312 SH 4

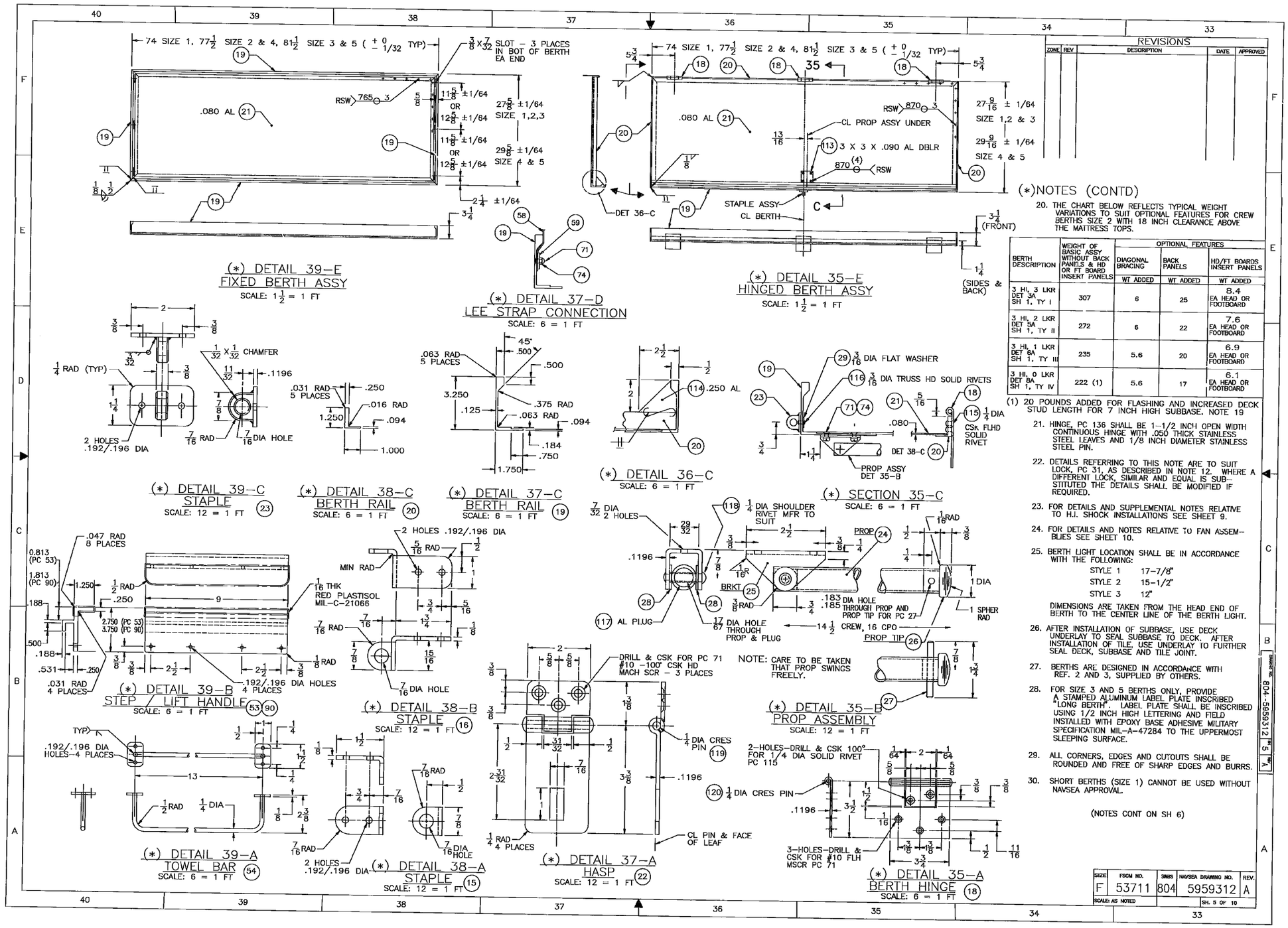


## REVISIONS

| ZONE | REV | DESCRIPTION | DATE | APPROVED |
|---|---|---|---|---|
| | | | | |

## (*)NOTES (CONTD)

20. THE CHART BELOW REFLECTS TYPICAL WEIGHT VARIATIONS TO SUIT OPTIONAL FEATURES FOR CREW BERTHS SIZE 2 WITH 18 INCH CLEARANCE ABOVE THE MATTRESS TOPS.

| BERTH DESCRIPTION | WEIGHT OF BASIC ASSY WITHOUT BACK PANELS & HD OR FT BOARD INSERT PANELS | OPTIONAL FEATURES | | |
|---|---|---|---|---|
| | | DIAGONAL BRACING | BACK PANELS | HD/FT BOARDS INSERT PANELS |
| | | WT ADDED | WT ADDED | WT ADDED |
| 3 HI, 3 LKR DET 3A SH 1, TY I | 307 | 6 | 25 | 8.4 EA HEAD OR FOOTBOARD |
| 3 HI, 2 LKR DET 5A SH 1, TY II | 272 | 6 | 22 | 7.6 EA HEAD OR FOOTBOARD |
| 3 HI, 1 LKR DET 6A SH 1, TY III | 235 | 5.6 | 20 | 6.9 EA HEAD OR FOOTBOARD |
| 3 HI, 0 LKR DET 8A SH 1, TY IV | 222 (1) | 5.6 | 17 | 6.1 EA HEAD OR FOOTBOARD |

(1) 20 POUNDS ADDED FOR FLASHING AND INCREASED DECK STUD LENGTH FOR 7 INCH HIGH SUBBASE. NOTE 19

21. HINGE, PC 136 SHALL BE 1-1/2 INCH OPEN WIDTH CONTINUOUS HINGE WITH .050 THICK STAINLESS STEEL LEAVES AND 1/8 INCH DIAMETER STAINLESS STEEL PIN.

22. DETAILS REFERRING TO THIS NOTE ARE TO SUIT LOCK, PC 31, AS DESCRIBED IN NOTE 12. WHERE A DIFFERENT LOCK, SIMILAR AND EQUAL IS SUBSTITUTED THE DETAILS SHALL BE MODIFIED IF REQUIRED.

23. FOR DETAILS AND SUPPLEMENTAL NOTES RELATIVE TO H.I. SHOCK INSTALLATIONS SEE SHEET 9.

24. FOR DETAILS AND NOTES RELATIVE TO FAN ASSEMBLIES SEE SHEET 10.

25. BERTH LIGHT LOCATION SHALL BE IN ACCORDANCE WITH THE FOLLOWING:

| | |
|---|---|
| STYLE 1 | 17-7/8" |
| STYLE 2 | 15-1/2" |
| STYLE 3 | 12" |

DIMENSIONS ARE TAKEN FROM THE HEAD END OF BERTH TO THE CENTER LINE OF THE BERTH LIGHT.

26. AFTER INSTALLATION OF SUBBASE, USE DECK UNDERLAY TO SEAL SUBBASE TO DECK. AFTER INSTALLATION OF TILE, USE UNDERLAY TO FURTHER SEAL DECK, SUBBASE AND TILE JOINT.

27. BERTHS ARE DESIGNED IN ACCORDANCE WITH REF. 2 AND 3, SUPPLIED BY OTHERS.

28. FOR SIZE 3 AND 5 BERTHS ONLY, PROVIDE A STAMPED ALUMINUM LABEL PLATE INSCRIBED "LONG BERTH". LABEL PLATE SHALL BE INSCRIBED USING 1/2 INCH HIGH LETTERING AND FIELD INSTALLED WITH EPOXY BASE ADHESIVE MILITARY SPECIFICATION MIL-A-47284 TO THE UPPERMOST SLEEPING SURFACE.

29. ALL CORNERS, EDGES AND CUTOUTS SHALL BE ROUNDED AND FREE OF SHARP EDGES AND BURRS.

30. SHORT BERTHS (SIZE 1) CANNOT BE USED WITHOUT NAVSEA APPROVAL.

(NOTES CONT ON SH 6)

| SIZE | FSCM NO. | SNSS | NAVSEA DRAWING NO. | REV. |
|---|---|---|---|---|
| F | 53711 | 804 | 5959312 | A |
| SCALE: AS NOTED | | | SH. 5 OF 10 | |

804-5959312 SH 5

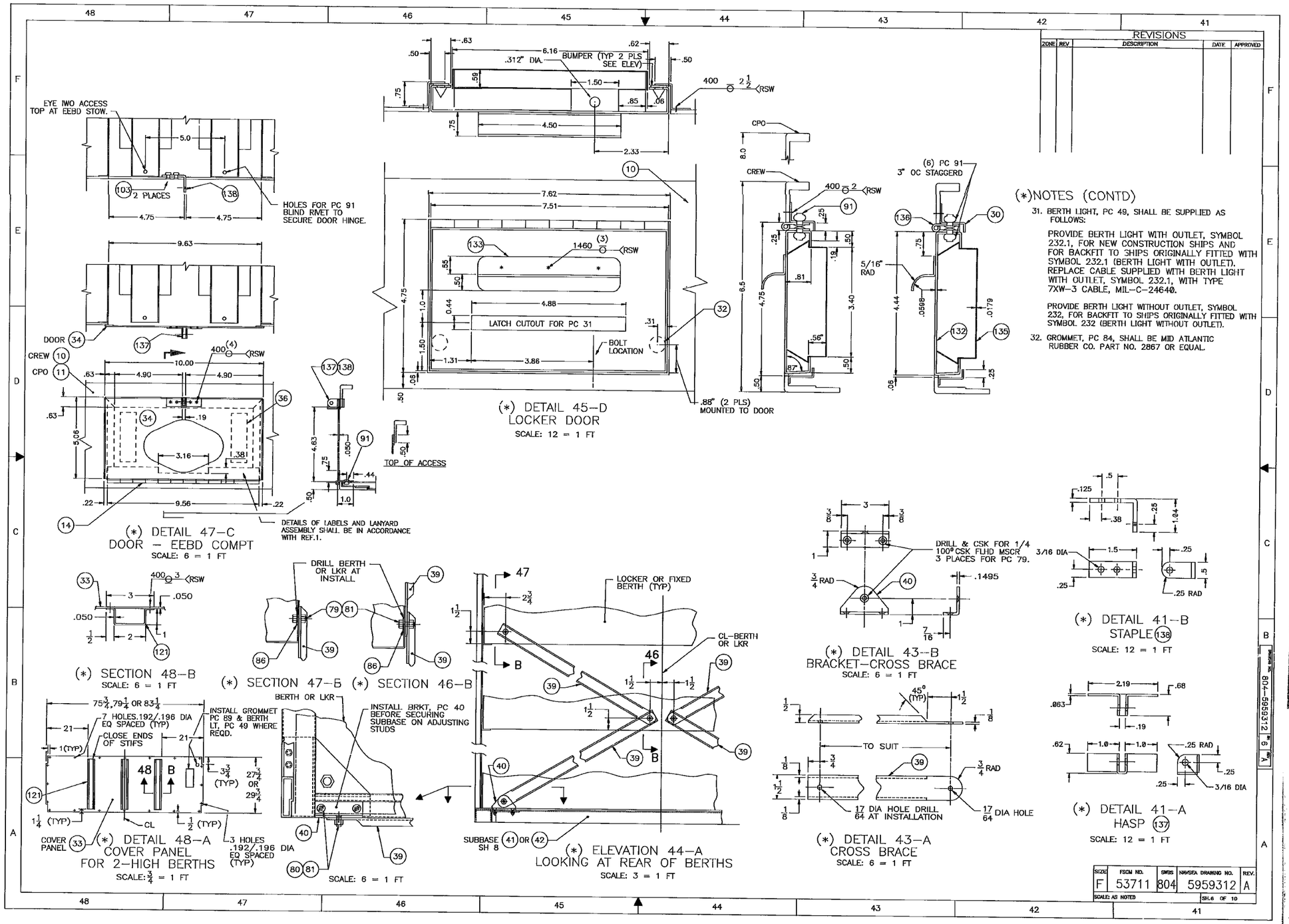


## (*)NOTES (CONTD)

31. BERTH LIGHT, PC 49, SHALL BE SUPPLIED AS FOLLOWS:

    PROVIDE BERTH LIGHT WITH OUTLET, SYMBOL 232.1, FOR NEW CONSTRUCTION SHIPS AND FOR BACKFIT TO SHIPS ORIGINALLY FITTED WITH SYMBOL 232.1 (BERTH LIGHT WITH OUTLET). REPLACE CABLE SUPPLIED WITH BERTH LIGHT WITH OUTLET, SYMBOL 232.1, WITH TYPE 7XW-3 CABLE, MIL-C-24640.

    PROVIDE BERTH LIGHT WITHOUT OUTLET, SYMBOL 232, FOR BACKFIT TO SHIPS ORIGINALLY FITTED WITH SYMBOL 232 (BERTH LIGHT WITHOUT OUTLET).

32. GROMMET, PC 84, SHALL BE MID ATLANTIC RUBBER CO. PART NO. 2867 OR EQUAL.

REVISIONS

| ZONE | REV | DESCRIPTION | DATE | APPROVED |
|---|---|---|---|---|
| | | | | |

| SIZE | FSCM NO. | SWBS | NAVSEA DRAWING NO. | REV. |
|---|---|---|---|---|
| F | 53711 | 804 | 5959312 | A |

SCALE: AS NOTED — SH.6 OF 10

DRAWING NO. 804-5959312 SH 6 REV A

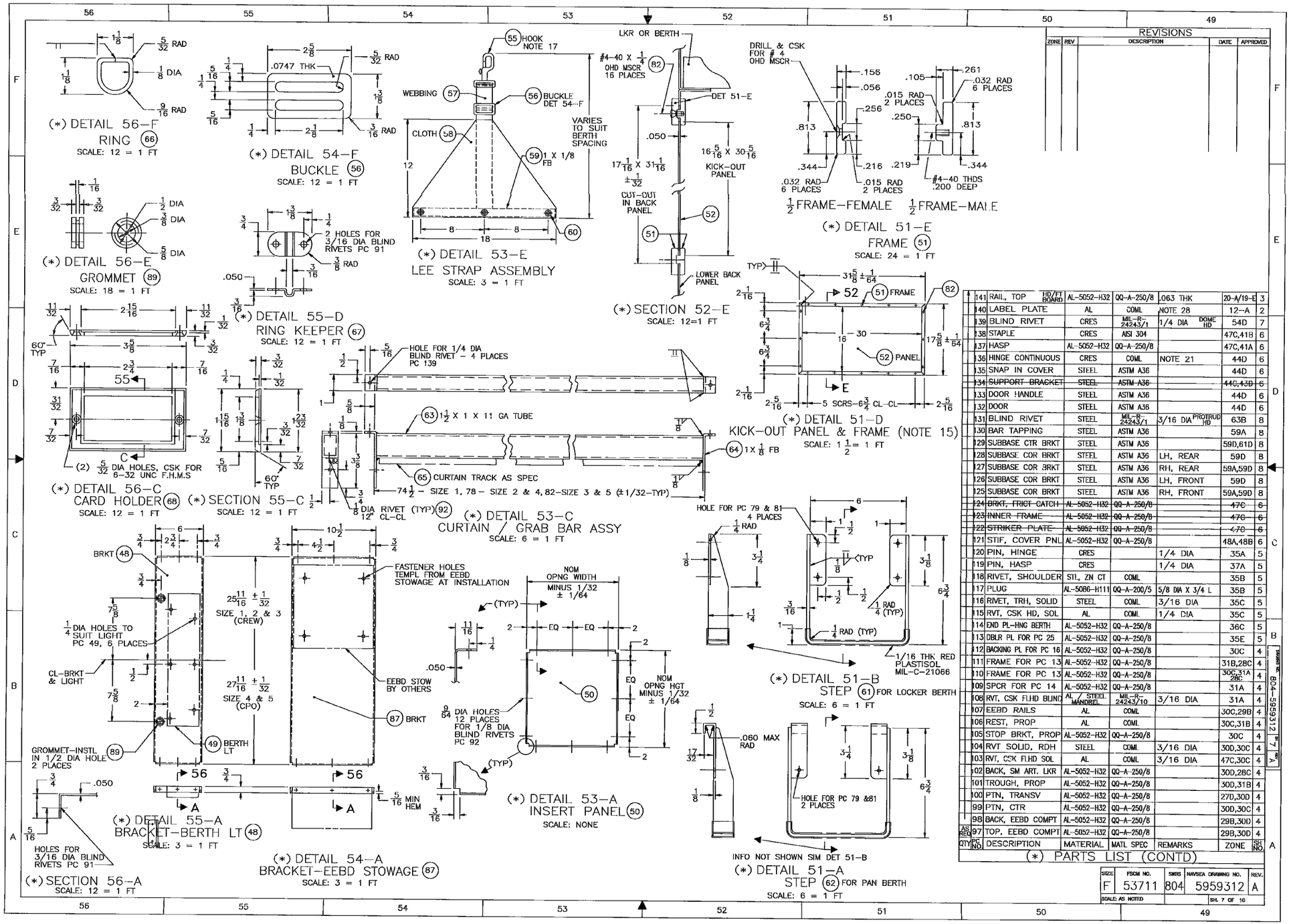


| ZONE | REV | DESCRIPTION | DATE | APPROVED |
|---|---|---|---|---|
| | | | | |

REVISIONS

| QTY REQ | PC NO. | DESCRIPTION | MATERIAL | MATL SPEC | REMARKS | ZONE | SH NO. |
|---|---|---|---|---|---|---|---|
| | 141 | RAIL, TOP HD/FT BOARD | AL-5052-H32 | QQ-A-250/8 | .063 THK | 20-A/19-E | 3 |
| | 140 | LABEL PLATE | AL | COML | NOTE 28 | 12-A | 2 |
| | 139 | BLIND RIVET | CRES | MIL-R-24243/1 | 1/4 DIA DOME HD | 54D | 7 |
| | 138 | STAPLE | CRES | AISI 304 | | 47C,41B | 6 |
| | 137 | HASP | AL-5052-H32 | QQ-A-250/8 | | 47C,41A | 6 |
| | 136 | HINGE CONTINUOUS | CRES | COML | NOTE 21 | 44D | 6 |
| | 135 | SNAP IN COVER | STEEL | ASTM A36 | | 44D | 6 |
| | ~~134~~ | ~~SUPPORT BRACKET~~ | ~~STEEL~~ | ~~ASTM A36~~ | | ~~44C,43D~~ | ~~6~~ |
| | 133 | DOOR HANDLE | STEEL | ASTM A36 | | 44D | 6 |
| | 132 | DOOR | STEEL | ASTM A36 | | 44D | 6 |
| | 131 | BLIND RIVET | STEEL | MIL-R-24243/1 | 3/16 DIA PROTRUD HD | 63B | 8 |
| | 130 | BAR TAPPING | STEEL | ASTM A36 | | 59A | 8 |
| | 129 | SUBBASE CTR BRKT | STEEL | ASTM A36 | | 59D,61D | 8 |
| | 128 | SUBBASE COR BRKT | STEEL | ASTM A36 | LH, REAR | 59D | 8 |
| | 127 | SUBBASE COR BRKT | STEEL | ASTM A36 | RH, REAR | 59A,59D | 8 |
| | 126 | SUBBASE COR BRKT | STEEL | ASTM A36 | LH, FRONT | 59D | 8 |
| | 125 | SUBBASE COR BRKT | STEEL | ASTM A36 | RH, FRONT | 59A,59D | 8 |
| | ~~124~~ | ~~BRKT, FRICT CATCH~~ | ~~AL-5052-H32~~ | ~~QQ-A-250/8~~ | | ~~47C~~ | ~~6~~ |
| | ~~123~~ | ~~INNER FRAME~~ | ~~AL-5052-H32~~ | ~~QQ-A-250/8~~ | | ~~47C~~ | ~~6~~ |
| | ~~122~~ | ~~STRIKER PLATE~~ | ~~AL-5052-H32~~ | ~~QQ-A-250/8~~ | | ~~47C~~ | ~~6~~ |
| | 121 | STIF, COVER PNL | AL-5052-H32 | QQ-A-250/8 | | 48A,48B | 6 |
| | 120 | PIN, HINGE | CRES | | 1/4 DIA | 35A | 5 |
| | 119 | PIN, HASP | CRES | | 1/4 DIA | 37A | 5 |
| | 118 | RIVET, SHOULDER | STL, ZN CT | COML | | 35B | 5 |
| | 117 | PLUG | AL-5086-H111 | QQ-A-200/5 | 5/8 DIA X 3/4 L | 35B | 5 |
| | 116 | RIVET, TRH, SOLID | STEEL | COML | 3/16 DIA | 35C | 5 |
| | 115 | RVT, CSK HD, SOL | AL | COML | 1/4 DIA | 35C | 5 |
| | 114 | END PL-HNG BERTH | AL-5052-H32 | QQ-A-250/8 | | 36C | 5 |
| | 113 | DBLR PL FOR PC 25 | AL-5052-H32 | QQ-A-250/8 | | 35E | 5 |
| | 112 | BACKING PL FOR PC 16 | AL-5052-H32 | QQ-A-250/8 | | 30C | 4 |
| | 111 | FRAME FOR PC 13 | AL-5052-H32 | QQ-A-250/8 | | 31B,28C | 4 |
| | 110 | FRAME FOR PC 13 | AL-5052-H32 | QQ-A-250/8 | | 30C,31A 28C | 4 |
| | 109 | SPCR FOR PC 14 | AL-5052-H32 | QQ-A-250/8 | | 31A | 4 |
| | 108 | RVT, CSK FLHD BLIND | AL / STEEL MANDREL | MIL-R-24243/10 | 3/16 DIA | 31A | 4 |
| | 107 | EEBD RAILS | AL | COML | | 30C,29B | 4 |
| | 106 | REST, PROP | AL | COML | | 30C,31B | 4 |
| | 105 | STOP BRKT, PROP | AL-5052-H32 | QQ-A-250/8 | | 30C | 4 |
| | 104 | RVT SOLID, RDH | STEEL | COML | 3/16 DIA | 30D,30C | 4 |
| | 103 | RVT, CSK FLHD SOL | AL | COML | 3/16 DIA | 47C,30C | 4 |
| | 102 | BACK, SM ART. LKR | AL-5052-H32 | QQ-A-250/8 | | 30D,28C | 4 |
| | 101 | TROUGH, PROP | AL-5052-H32 | QQ-A-250/8 | | 30D,31B | 4 |
| | 100 | PTN, TRANSV | AL-5052-H32 | QQ-A-250/8 | | 27D,30D | 4 |
| | 99 | PTN, CTR | AL-5052-H32 | QQ-A-250/8 | | 30D,30C | 4 |
| | 98 | BACK, EEBD COMPT | AL-5052-H32 | QQ-A-250/8 | | 29B,30D | 4 |
| | 97 | TOP, EEBD COMPT | AL-5052-H32 | QQ-A-250/8 | | 29B,30D | 4 |

(*) PARTS LIST (CONTD)

| SIZE | FSCM NO. | SWBS | NAVSEA DRAWING NO. | REV. |
|---|---|---|---|---|
| F | 53711 | 804 | 5959312 | A |
| SCALE: AS NOTED | | | SH. 7 OF 10 | |

804-5959312 SH 7 REV A

7 .H2 804-5959312

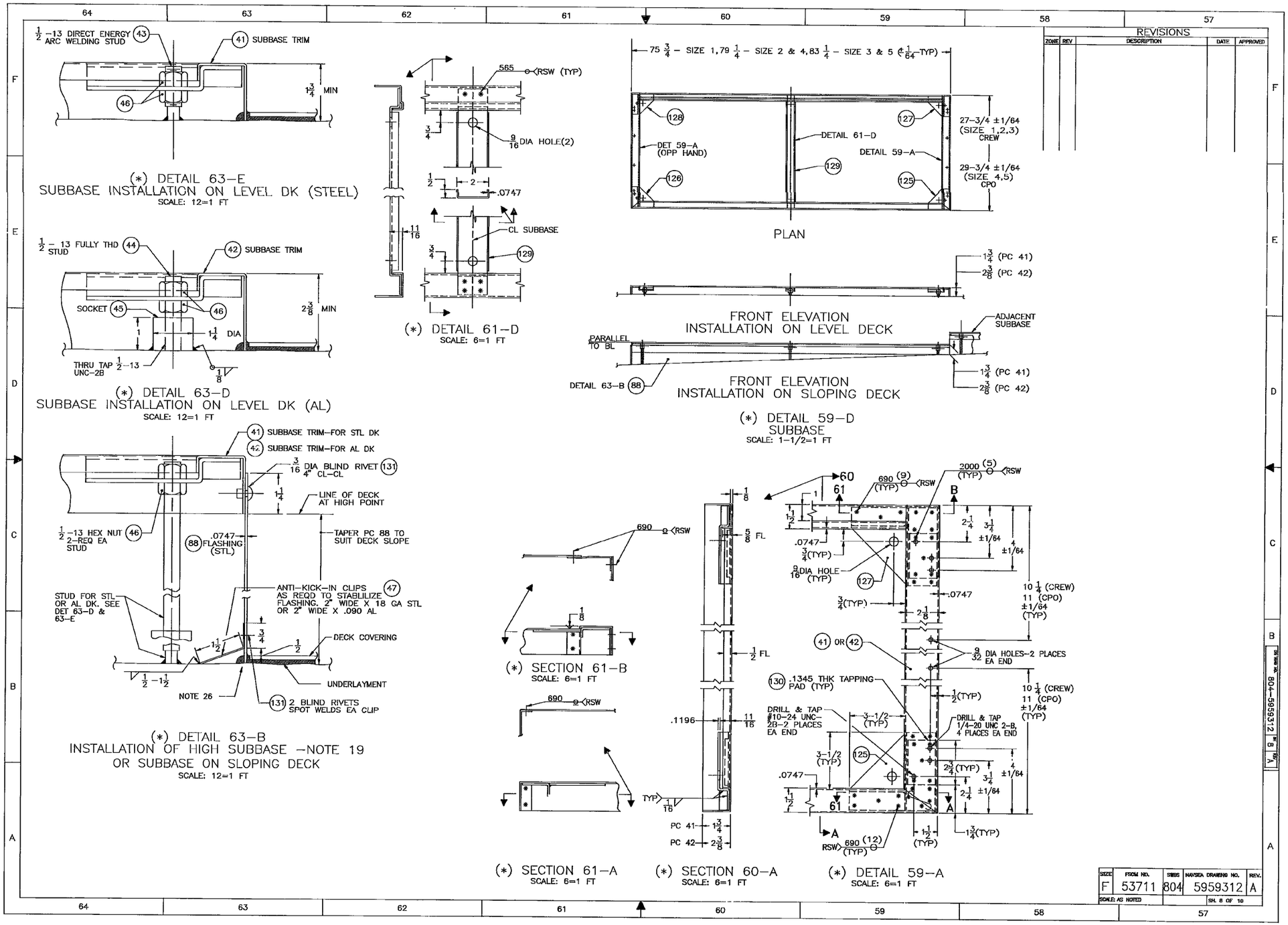


REVISIONS

| ZONE | REV | DESCRIPTION | DATE | APPROVED |
|---|---|---|---|---|

| SIZE | FSCM NO. | SWBS | NAVSEA DRAWING NO. | REV. |
|---|---|---|---|---|
| F | 53711 | 804 | 5959312 | A |

SCALE: AS NOTED — SH. 8 OF 10

804-5959312 SH. 8

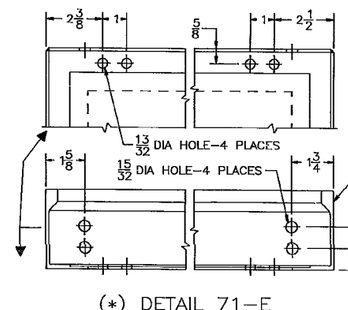


(*) DETAIL 71–E
FIXED BERTH–MODIFICATION
RIGHT END SHOWN–LEFT END SIM & OPP
SCALE: 6=1 FT

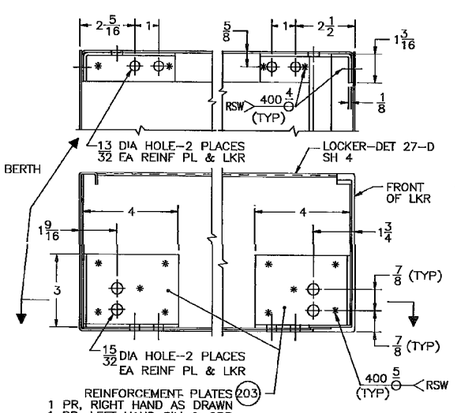


(*) DETAIL 69–D
LOCKER REINFORCEMENT PLATES
RIGHT HAND AS DRAWN–LEFT HAND SIM & OPP
SCALE: 6=1 FT

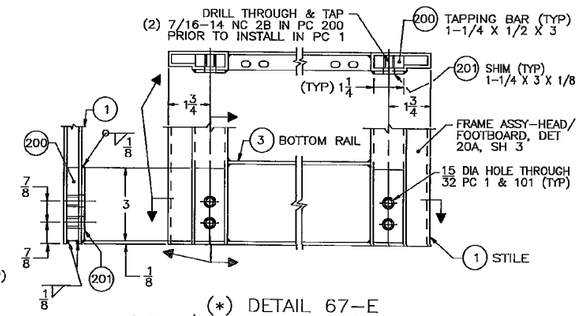


(*) DETAIL 67–E
HEAD/FOOTBOARD MODIFICATION
SCALE: 6=1 FT

| REVISIONS | | | | |
|---|---|---|---|---|
| ZONE | REV | DESCRIPTION | DATE | APPROVED |

(*) NOTES (SUPPLEMENTAL–HI SHOCK)

50. DETAILS SHOWN ON SHEET 9 ARE SUGGESTED MODIFICATIONS FOR ATTACHMENT OF THE BERTH ASSEMBLY TO THE SUBBASE AND THE DECK WHERE THE BERTH IS SPECIFIED TO BE SHOCK QUALIFIED TO MEET THE REQUIREMENTS OF MILITARY SPECIFICATION MIL–S–901. (SEE NOTE 53).

51. MODIFICATIONS SHOWN ARE THOSE EMPLOYED DURING SHENANDOAH LABORATORIES, DIVISION OF HOPEMAN BROTHERS, INC. SHOCK TESTS OF PROTOTYPE BERTH ASSEMBLIES DETAILS 3–A & 3–B, SHEET 1 IN ACCORDANCE WITH MILITARY SPECIFICATION MIL–S–901, AS DESCRIBED IN SHENANDOAH LABORATORIES SHOCK TEST REPORTS NO. S–469 & S–470, DATED OCT 29 & NOV 20, 1985 RESPECTIVELY (EXCEPT AS DESCRIBED IN NOTE 52).

52. CHOCKS, PC 106 ARE ADDED TO THE FOUR CORNER SUBBASE STUDS AS SHOWN IN DETAILS 69–B, 71–B & SECTION 67–A TO REINFORCE THE STUDS UNDER SHOCK LOAD AS INDICATED BY FAILURE OF THE STUDS AS DESCRIBED IN SHOCK TESTS PER NOTE 51.

53. INCORPORATION OF THE DETAILS SHOWN ON THIS SHEET ARE SUGGESTED ONLY AND DO NOT IN THEMSELVES QUALIFY THE BERTH ASSEMBLIES FOR THE REQUIRED SHOCK GRADE WITHOUT THE TESTS IN ACCORDANCE WITH MILITARY SPECIFICATION MIL–S–901. DEVIATIONS ARE PERMITTED PROVIDED PERFORMANCE REQUIREMENTS ARE MET.

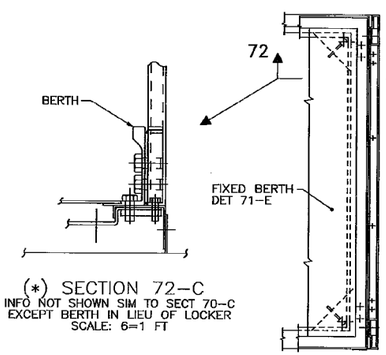


(*) SECTION 72–C
INFO NOT SHOWN SIM TO SECT 70–C
EXCEPT BERTH IN LIEU OF LOCKER
SCALE: 6=1 FT

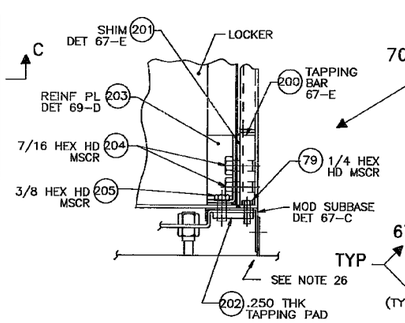


(*) SECTION 70–C
SCALE: 6=1 FT

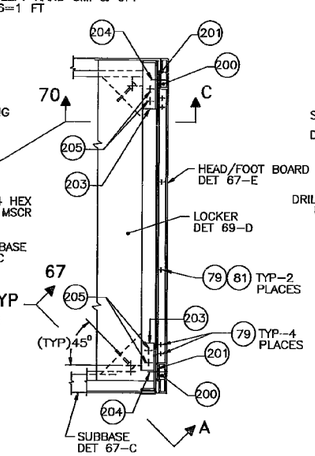


(*) DETAIL 71–B
HEAD/FOOTBOARD & FIXED BERTH
ATTACHMENT TO SUBBASE
ALL INFO NOT SHOWN SIM TO DET 69–B
EXCEPT BERTH IN LIEU OF LOCKER
SCALE: 3=1 FT

(*) DETAIL 69–B
HEAD/FOOTBOARD & BOTTOM LOCKER
ATTACHMENT TO SUBBASE
SCALE: 3=1 FT

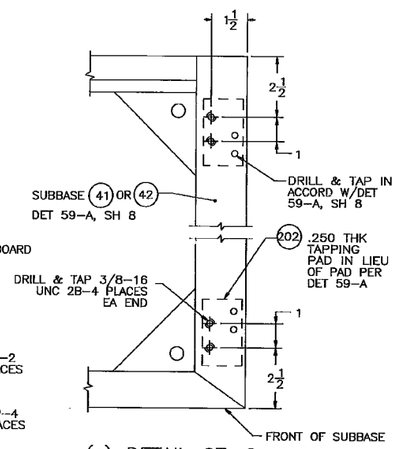


(*) DETAIL 67–C
SUBBASE–MODIFICATION
RIGHT END SHOWN–LEFT END SIM & OPP
SCALE: 6=1 FT
SUBBASE–MODIFICATION

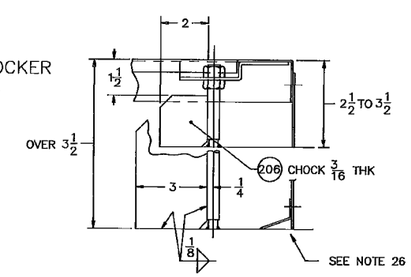


(*) SECTION 67–A
SUBBASE–OVER 2–1/2 HIGH
INSTALLATION–NOTE 52
SCALE: 6=1 FT

| QTY | PC NO. | DESCRIPTION | MATERIAL | MATL SPEC | REMARKS | ZONE | SHEET NO |
|---|---|---|---|---|---|---|---|
| 4 | 206 | CHOCK–3/16 PL | STEEL | ASTM–A36 | FOR SUBBASE OVER 2–1/2 HIGH | 67A | 9 |
| 8 | 205 | 3/8–16 HEX HD MSCR | STL–ZINC CTD | COML | L=3/4" | 69B,70C | 9 |
| 8 | 204 | 7/16–14 HEX HD MSCR | STL–ZINC CTD | COML | L=3/4" | 69B,70C | 9 |
| 1 SET | 203 | REINF PLATE | AL 5052–H32 | QQ–A–250/8 | IN LKR | 69D | 9 |
| 4 | 202 | TAPPING PAD | STEEL | ASTM–A36 | ON SUBBASE | 67C | 9 |
| 4 | 201 | SHIM | AL 5052–H32 | QQ–A–250/8 | IN HD/FT BD | 67E | 9 |
| 4 | 200 | TAPPING BAR | AL 5052–H32 | QQ–A–250/8 | IN HD/FT BD | 67E | 9 |

(*) PARTS LIST (SUPPLEMENTAL–HI SHOCK)

SUGGESTED
INSTALLATION DETAILS
MOD FOR HI SHOCK

| SIZE | FSCM NO. | SWBS | NAVSEA DRAWING NO. | REV. |
|---|---|---|---|---|
| F | 53711 | 804 | 5959312 | A |
| SCALE: AS NOTED | | | SH. 9 OF 10 | |

DRAWING NO. 804–5959312 SH 9 REV A

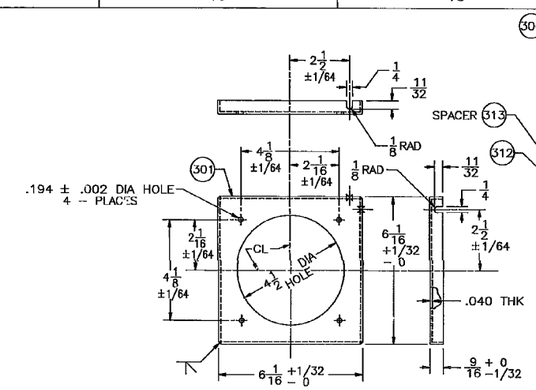


(*)DETAIL 78–E
HOUSING COVER (301)
SCALE: 6 = 1 FT

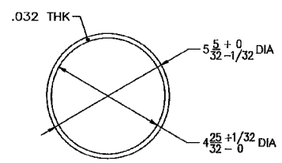


(*)DETAIL 78–D
WASHER (304)
SCALE: 6 = 1 FT

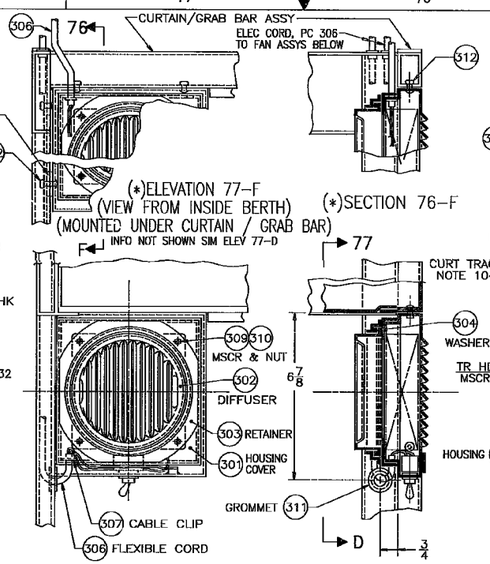


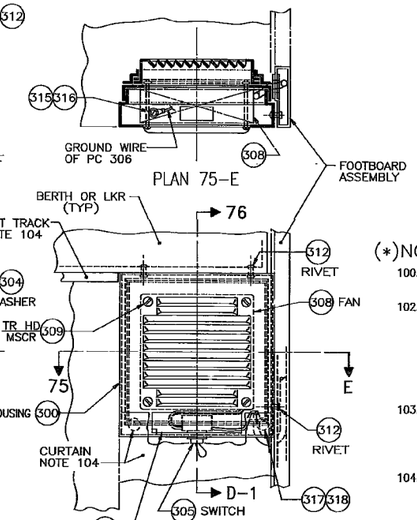


(*)DETAIL 76–D
TYPICAL INSTALLATIONS
FAN ASSEMBLY
SCALE: 6 = 1 FT

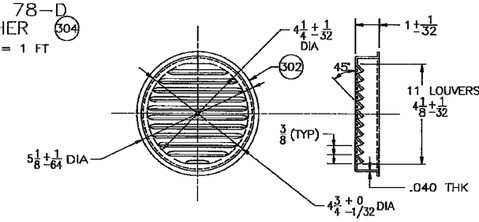


(*)DETAIL 77–C
ADJUSTABLE DIFFUSER (302)
SCALE: 6 = 1 FT

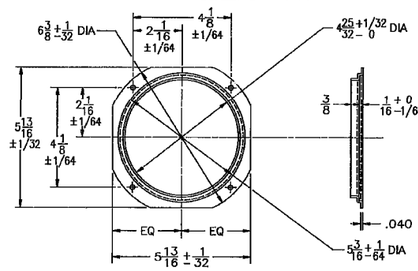


(*)DETAIL 77–A
RETAINER (303)
SCALE: 6 = 1 FT

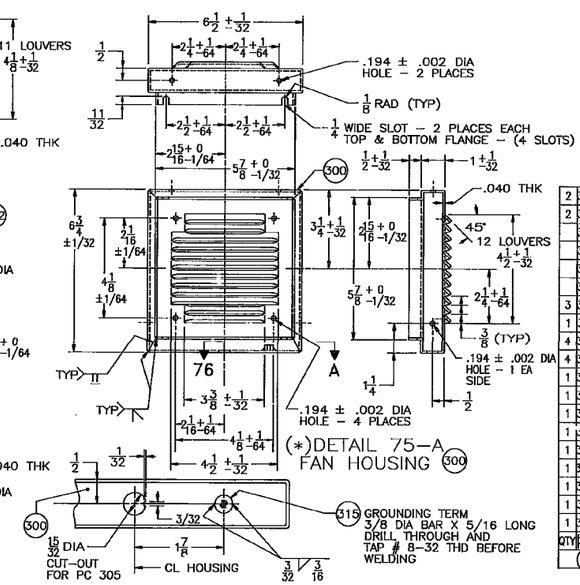


## (*)NOTES

100. NOTES 1 & 2, SH 1 FOR CONSTRUCTION OF BERTHS ALSO APPLY TO CONSTRUCTION OF FAN ASSEMBLIES.

102. MFR LABEL, PC 314 SHALL BE STAMPED ALUMINUM AND SHALL CONTAIN THE FOLLOWING:
MFR'S IDENTIFICATION, THIS DRAWING NUMBER, STOCK NUMBER IF ANY, AND CONTRACT OR ORDER NUMBER AND DATE.

LABEL SHALL BE AFFIXED TO THE LOWER FACE OF THE FAN HOUSING, PC 300 AS SHOWN IN ELEV 75–D WITH EPOXY RESIN BASE ADHESIVE, MIL SPEC MIL–A–47284.

103. THE FLEXIBLE CORD, PC 306 SHALL BE EXTENDED THROUGH THE APPROPRIATE SLOT IN THE FAN HOUSING FLANGE, PC 300 AT INSTALLATION. THE HOUSING COVER, PC 301 SHALL THEN BE INSTALLED WITH ITS APPROPRIATE SLOT OVER THE CORD FOR RETENTION.

104. INSTALLATION OF THE FAN ASSEMBLY REQUIRES REMOVAL OF THAT PORTION OF THE CURTAIN TRACK OCCUPIED BY THE FAN. A FIXED CURTAIN, FASTENED WITH SNAP FASTENERS (PC 317 & 318) SHALL BE INSTALLED UNDER THE FAN.

105. FAN, PC 308, SHALL BE WHISPER FAN MODEL NO. WR2A1 AS MANUFACTURED BY ROTRON, INC. WOODSTOCK, N.Y. OR EQUAL. WHERE DIFFERENT, BUT EQUAL FAN IS USED THE FAN HOUSING ASSEMBLY MAY REQUIRE MODIFICATIONS ACCORDINGLY.

REVISIONS

| ZONE | REV | DESCRIPTION | DATE | APPROVED |
|---|---|---|---|---|
| | | | | |

| QTY | PC NO. | DESCRIPTION | MATERIAL | MATL SPEC | REMARKS | ZONE | SH NO. |
|---|---|---|---|---|---|---|---|
| 2 | 318 | KIRSCH F501\61 RIVET | CRES | COML | | 75D | 10 |
| 2 | 317 | KIRSCH 92121 D–2/16 SNAP | CRES | COML | | 75D | 10 |
| | 316 | #8–32 X 1/4 TR HD MSCR | STL – ZN CTD | COML | | 75E | 10 |
| | 315 | GROUNDING TERMINAL | AL 5086–H111 | QQ–A–200/5 | | 75A,76A | 10 |
| | 314 | LABEL, MFR | AL | COML | NOTE 102 | 75D,76D | 10 |
| | 313 | SPACER | AL 5052–H32 | QQ–A–250/8 | FOR UPPER BERTH ONLY | – ,77F | 10 |
| 3 | 312 | BLIND RIVET, 3/16 DIA | AL – STEEL MANDREL | MIL–R–24243/10 | DOMED HEAD | – ,76D | 10 |
| 1 | 311 | GROMMET | RUBBER | COML | SAME AS PC 84 | – 76D–1 56E–1 | 10 |
| 4 | 310 | #6–32 HEX NUT | STL – ZN CTD | COML | SELF–LOCKING | – | 10 |
| 4 | 309 | #6–32 X 1–7/8 TR HD MSCR | STL – ZN CTD | COML | | – | 10 |
| 1 | 308 | FAN | VARIES | COML | NOTE 105 | – | 10 |
| 1 | 307 | CABLE CLIP | AL / PLASTIC | COML | STRAIN RELIEF | – | 10 |
| 1 | 306 | FLEXIBLE CORD | VARIES | W–C–500 | 18–3–SVT OR EQ 20 FT LONG | – | 10 |
| 1 | 305 | SWITCH, TOGGLE, DPST | VARIES | MS16569–1 | FSN 5930–669–8371 | – | 10 |
| 1 | 304 | WASHER LINER | FELT | COML | CEMENT TO PC 302 | 78D, | 10 |
| 1 | 303 | RETAINER | AL 5052–H32 | QQ–A–250/8 | | 77A, | 10 |
| 1 | 302 | ADJUST DIFFUSER | AL 5052–H32 | QQ–A–250/8 | | 77C, | 10 |
| 1 | 301 | HOUSING COVER | AL 5052–H32 | QQ–A–250/8 | | 78E, | 10 |
| 1 | 300 | FAN HOUSING | AL 5052–H32 | QQ–A–250/8 | | 75A,76D | 10 |

(*)PARTS LIST – FOR ONE FAN ASSEMBLY

FAN ASSEMBLY

| SIZE | FSCM NO. | SHBS | NAVSEA DRAWING NO. | REV. |
|---|---|---|---|---|
| F | 53711 | 804 | 5959312 | A |
| SCALE: AS NOTED | | SH. 10 OF 10 | | |

DRAWING NO. 804–5959312 REV. A