GENERAL NOTES

1. EMERGENCY ESCAPE BREATHING DEVICE CONTAINER SHALL BE BUILT IN ACCORDANCE WITH MIL-F-902.
2. TAMPER SEAL, PC. 3, AND MOUNTING BOLTS SHALL BE PROVIDED BY THE INSTALLING ACTIVITY.
3. MOUNTING SCREWS, 1/4-20 RHMS, SHALL BE INSTALLED WITH THE HEAD OF THE SCREW INSIDE THE CONTAINER. WHEN THE CONTAINER IS INSTALLED ON BERTHS, USE A CAP NUT TO PREVENT THE SCREW FROM DAMAGING THE MATTRESS.
4. MATCH DRILL 0.191 DIA HOLE THROUGH PCS. 8 AND 9 AFTER MOUNTING ON CONTAINER TO INSURE PROPER FIT OF PC. 11.
5. THE CONTAINER SHOWN ON THIS DRAWING HAS BEEN TESTED TO GRADE A SHOCK, PER MIL-S-901, BASED UPON HIGH-TEST LABORATORIES, INC., REPORTS NO. 219 AND 224. ANY DEVIATIONS OR WAIVERS SHALL REQUIRE FIRST ARTICLE SHOCK TEST.
6. STENCILED LETTERS EEBD SHALL BE PHOTOLUMINESCENT PAINT, COLOR NUMBER 11105 IN ACCORDANCE WITH ADVANCE CHANGE NOTICE (ACN) #10 TO NSTM S9086-CN-STM-020, CHAPTER 079, VOLUME II.

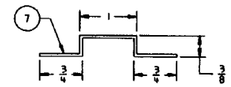

DETAIL 6-F
SPACER
SCALE : 1 = 1

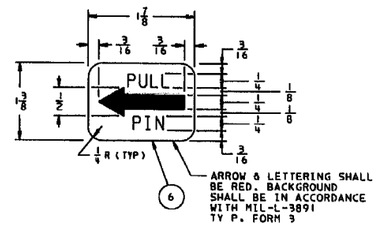

DETAIL 5-E
PULL LABEL
SCALE : 1 = 1

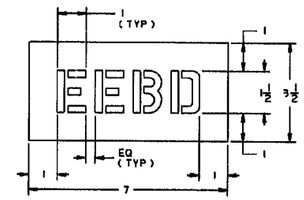

HORIZONTAL TEMPLATE FOR MARKING EACH SIDE THAT IS NORMALLY VISIBLE

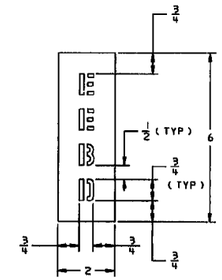

VERTICAL TEMPLATE FOR MARKING DOOR

DETAIL 3-E
IDENTIFICATION LABEL (5)
SCALE : 1/2 = 1

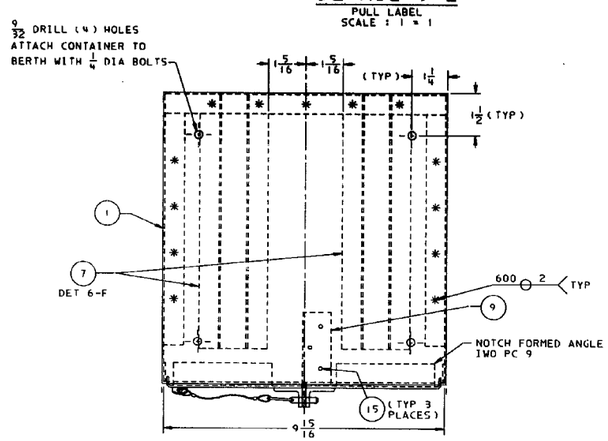

PLAN 5-D
GENERAL ARRANGEMENT - CONTAINER TOP
SCALE : 1/2 = 1

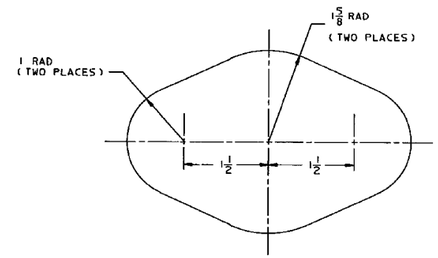

DETAIL 3-D
DOOR CUTOUT
SCALE : 1 = 1

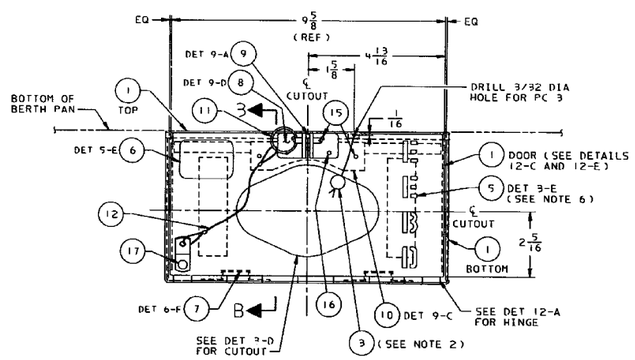

ELEVATION 5-B
CONTAINER FRONT
SCALE : 1/2 = 1

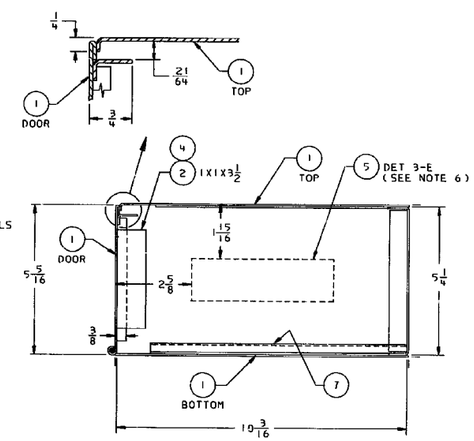

SECTION 3-B
CONTAINER TYPICAL SECTION
SCALE : 1/2 = 1

ZONE	REV	REVISIONS DESCRIPTION	DATE	APPROVED
ALL	A	COMPLETELY REDRAWN. ADDED TOGGLE DEVICE TO SUIT SHOCK REQUIREMENTS. CHANGED FROM TYPE TO STANDARD DWG	7/11/89	JKB

NO REQ	PC NO	DESCRIPTION	MATERIAL	MATL SPEC	REMARKS	REF DWG
1	17	RIVET, BLIND. 3/16 DIA	ALUM	MIL-R-24243/1	PART NO. M24243/1-A602	
2	16	RIVET, BLIND. 1/8 DIA	ALUM	MIL-R-24243/1	PART NO. M24243/1-A406	
7	15	RIVET, BLIND. 1/8 DIA	ALUM	MIL-R-24243/1	PART NO. M24243/1-A404	
1	14	PIN, HINGE. 1/8 DIA	ALUM 5052	QQ-A-225/7	TEMPER. HALF HARD	
3	13	RIVET, BLIND. 1/8 DIA	ALUM	MIL-R-24243/1	PART NO. M24243/1-A403	
1	12	LANYARD, 6" LG	CRES	COML	McMASTER CARR 9031 2A31 OR EQ	
1	11	QUICK RELEASE PIN	CRES	MIL-P-23460 TYPE II, STYLE 4	MS17990-C305	
1	10	BACKING PLATE	ALUM 6061-T6	QQ-A-200/16	CUT FROM 1X1/8 F.B.	
1	9	LATCH EYE, FIXED	ALUM 6061-T6	QQ-A-200/16	CUT FROM 1X1X1/8 L	
2	8	LATCH EYE, DOOR	ALUM 6061-T6	QQ-A-200/16	(1 RH, 1 LH) CUT FROM 1X1X1/8 L	
2	7	SPACER, 0.050 THK	ALUM 5052-H32	ASTM-B-209	8-1/4 LONG	
1	6	LABEL, PULL	ALUM	MIL-P-15024/5		
1	5	LABEL, IDENT	NOTE 6			
AR	4	ADHESIVE		COML	3M N EC880 OR EQ	
1	3	TAMPER SEAL ASSY	NOTE 2	MIL-S-23769	TY 1	
2	2	FOAM BLOCK		MIL-R-20092	TYII, CL 5	
AR	1	BODY	ALUM 5052-H32	ASTM-B-209	0.050 THK	

PARTS LIST

2	1	SH	REVISION STATUS OF SHEETS
A	A	REV	

SUPERSEDES DWG NO. 5184216

NO.	DRAWING TITLE	DWG NO.
1	RACKS FOR MOUNTING (EEBD) CONTAINERS	803-LATER

REFERENCE DRAWING

APPROVED FOR PUBLIC RELEASE: DISTRIBUTION IS UNLIMITED

UNLESS OTHERWISE NOTED, DIMENSIONS ARE INCHES

TOLERANCES ARE IN ACCORDANCE WITH COMMERCIAL PRACTICE UNLESS OTHERWISE INDICATED ON DRAWING.

CONTRACT NO.

PREP ACTIVITY CAGE CODE

	SIGNATURE	DATE
PREPARED	J.V. MILLER	6/19/89
CHECKED	M. TYNAN	6/19/89
HD ENGR	M. TYNAN	6/19/89
NAVY APPROVAL		
PROJ ENGR		
BR. HD		
DIV. DIR		
GPP DEP DIR		
APPD FOR COMNAVSEA		DATE

STANDARD DRAWING

DEPARTMENT OF THE NAVY WASHINGTON, D.C. 20362-5101

NAVAL SEA SYSTEMS COMMAND

CONTAINER, STOWAGE
EMERGENCY ESCAPE BREATHING DEVICE
(EEBD)

SIZE	CAGE CODE	ESWBS	DRAWING NO.	REV
F	53711	803	5751208	A

SCALE: AS SHOWN WEIGHT (MASS): 2.5 LB SHEET 1 OF 2

803-5751208 SHEET 1 REV A

53711 803 5751208 01A

REVISIONS				
ZONE	REV	DESCRIPTION	DATE	APPROVED

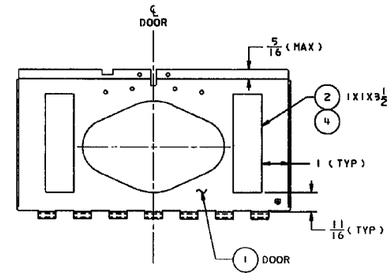

DETAIL 12-E
CONTAINER DOOR REAR
SCALE : 1/2 = 1

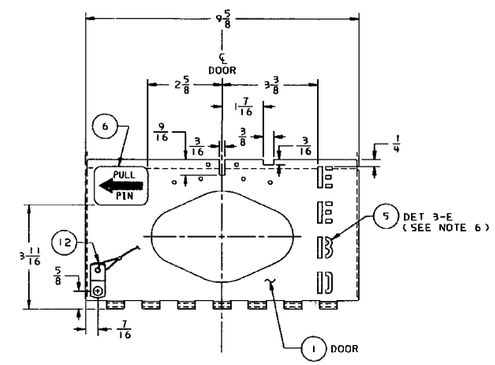

DETAIL 12-C
CONTAINER DOOR FRONT
SCALE : 1/2 = 1

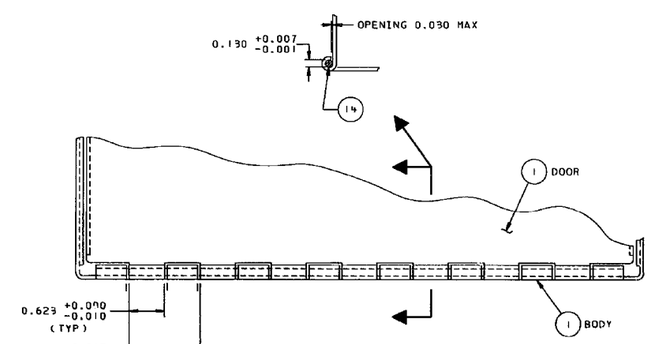

DETAIL 12-A
HINGE
SCALE : 1 = 1

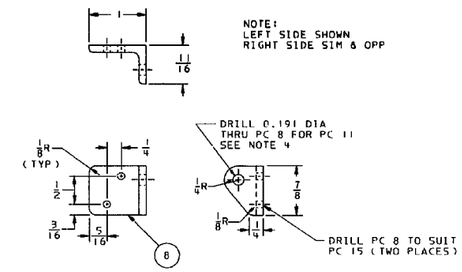

DETAIL 9-D
DOOR LATCH EYE
SCALE : 1 = 1

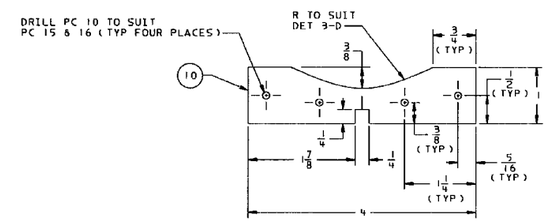

DETAIL 9-C
BACKING PLATE
SCALE : 1 = 1

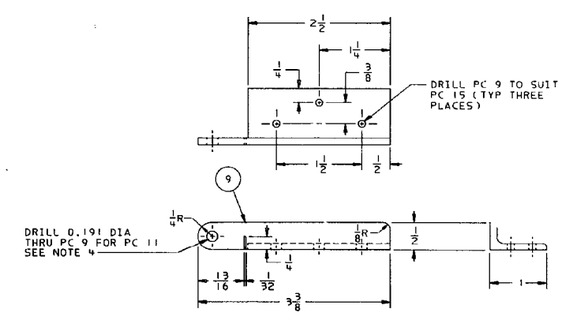

DETAIL 9-A
FIXED LATCH EYE
SCALE : 1 = 1

DEPARTMENT OF THE NAVY NAVAL SEA SYSTEMS COMMAND WASHINGTON, D.C. 20362-5101	SIZE	CAGE CODE	ESWBS	DRAWING NO.	REV
DRAWN J.V.MILLER	F	53711	803	5751208	A
ISSUE	SCALE: AS SHOWN	MASS (WEIGHT)		SHEET 2	

DWG NO. 5751208 SHT 2 REV A

5751208 803 SH2