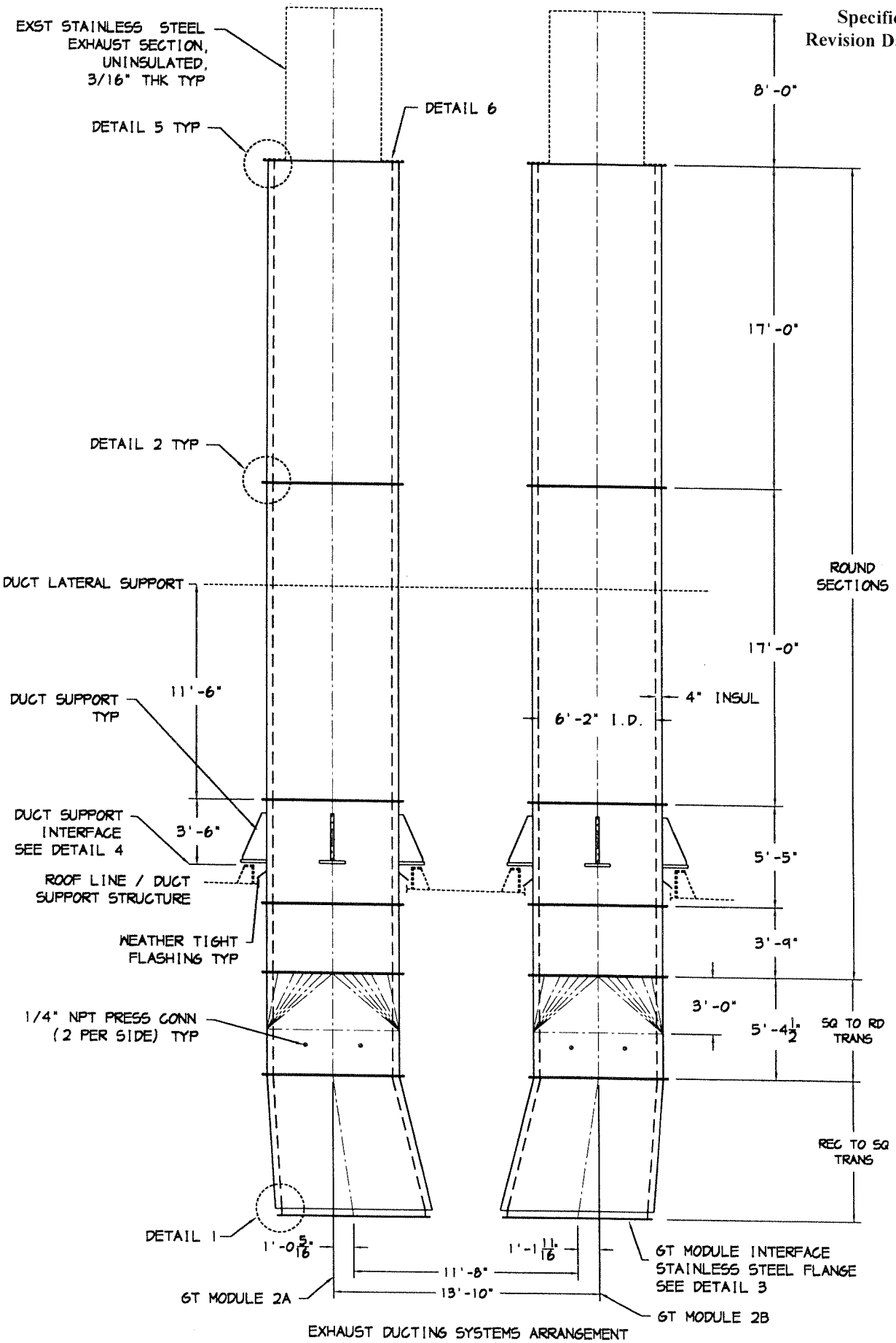

EXHAUST DUCTING SYSTEMS ARRANGEMENT
LOOKING NORTH

FIGURE 1
SHEET 1 OF 5

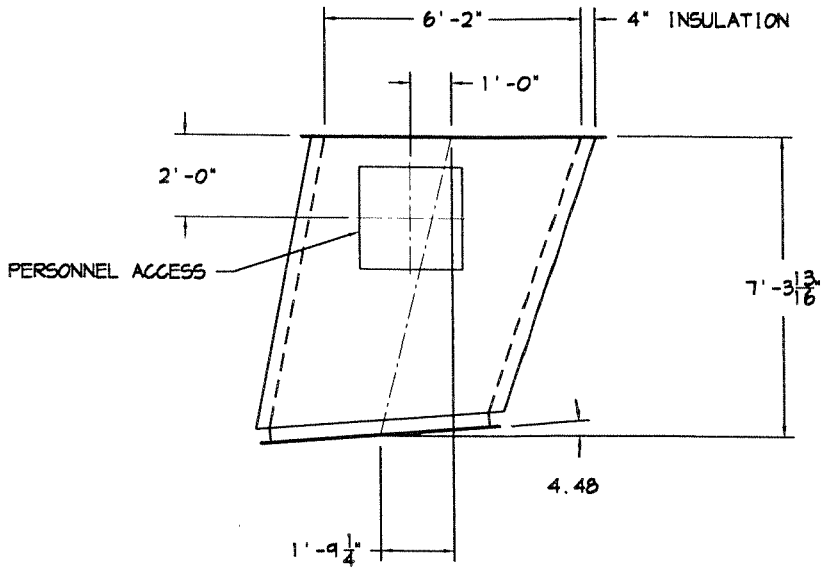

GT MODULE 2B REC TO SQ TRANS ARRANGEMENT
LOOKING EAST

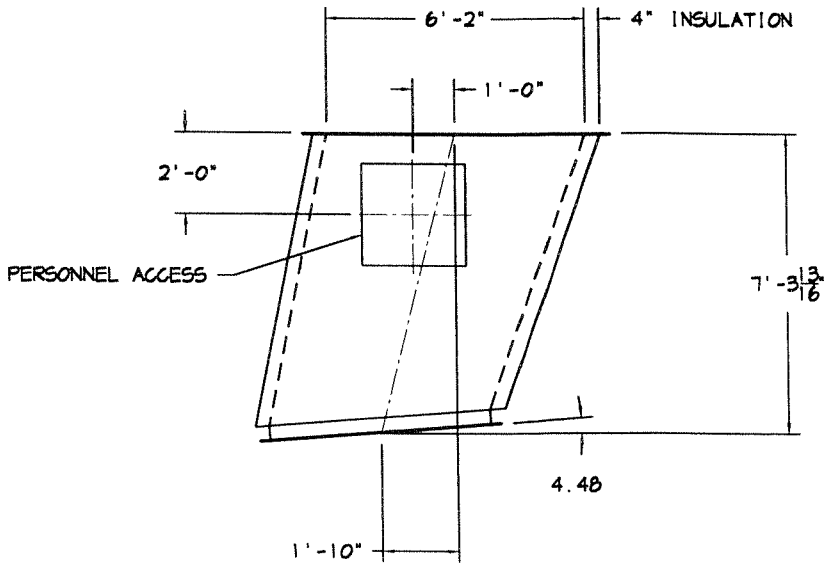

GT MODULE 2A REC TO SQ TRANS ARRANGEMENT
LOOKING EAST

FIGURE 1
SHEET 2 OF 5

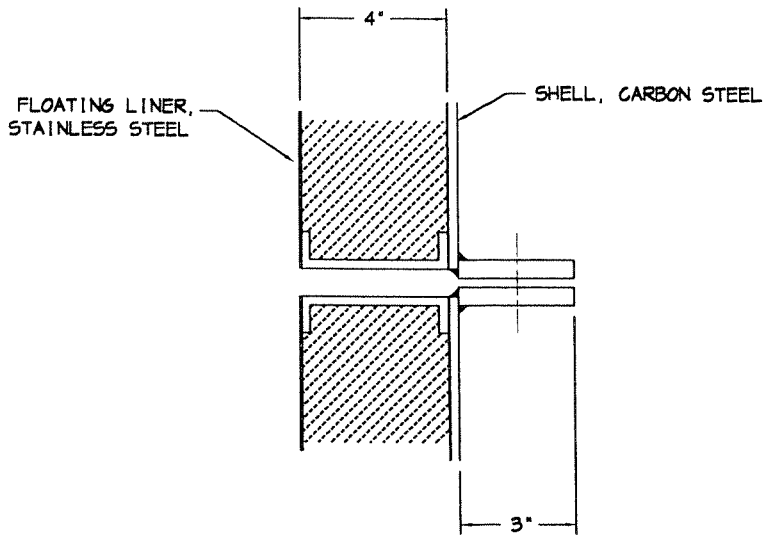

DETAIL 2
TYPICAL FLANGE CONFIGURATION

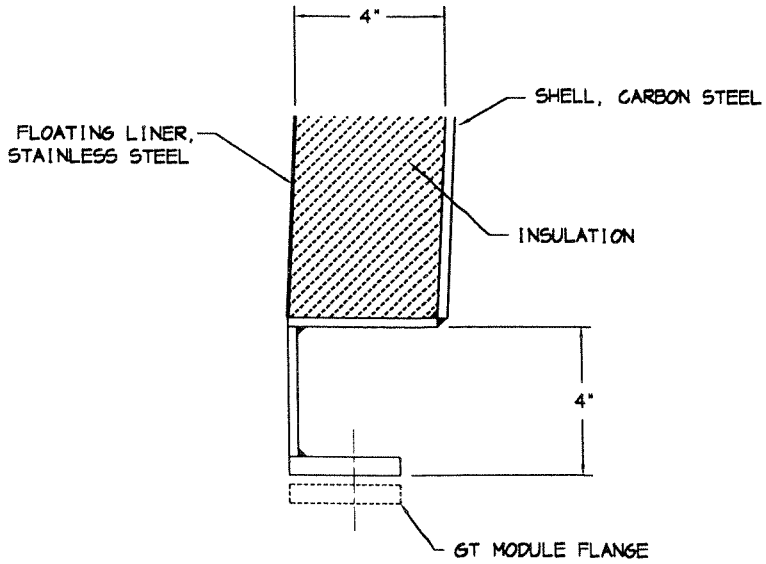

DETAIL 1
TYPICAL GT MODULE FLANGE CONFIGURATION

FIGURE 1
SHEET 3 OF 5

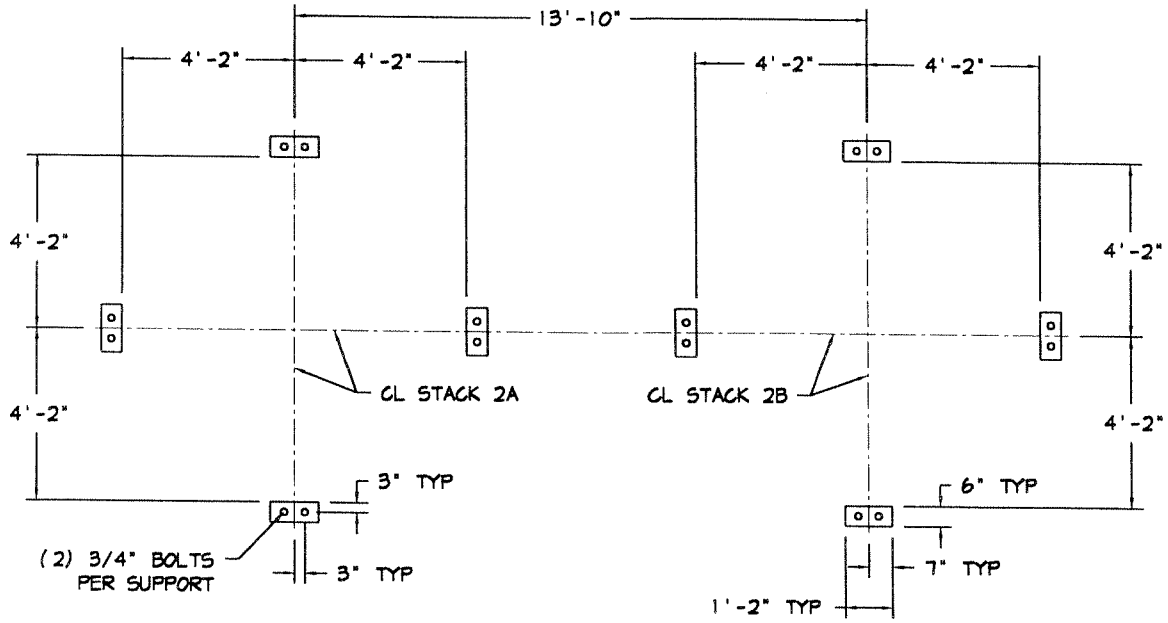

DETAIL 4
EXHAUST SYSTEM SUPPORT INTERFACE

NORTH

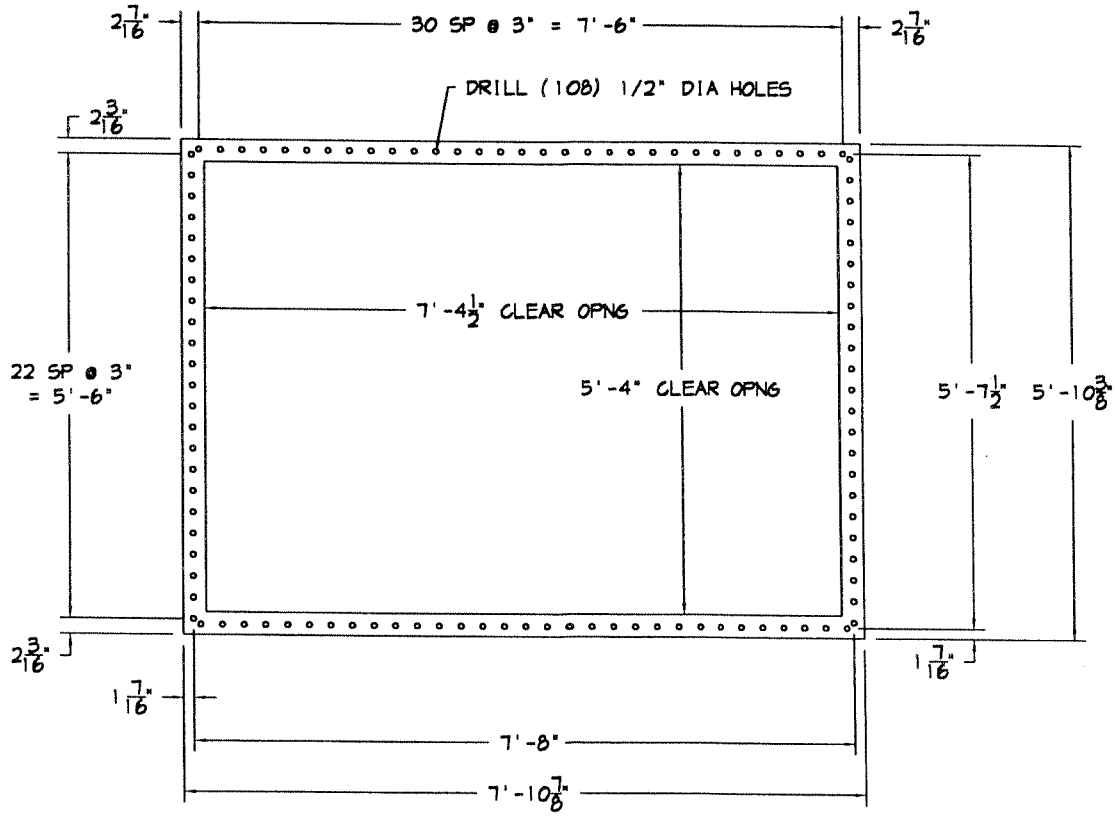

DETAIL 3
GT MODULE INTERFACE FLANGE

FIGURE 1
SHEET 4 OF 5

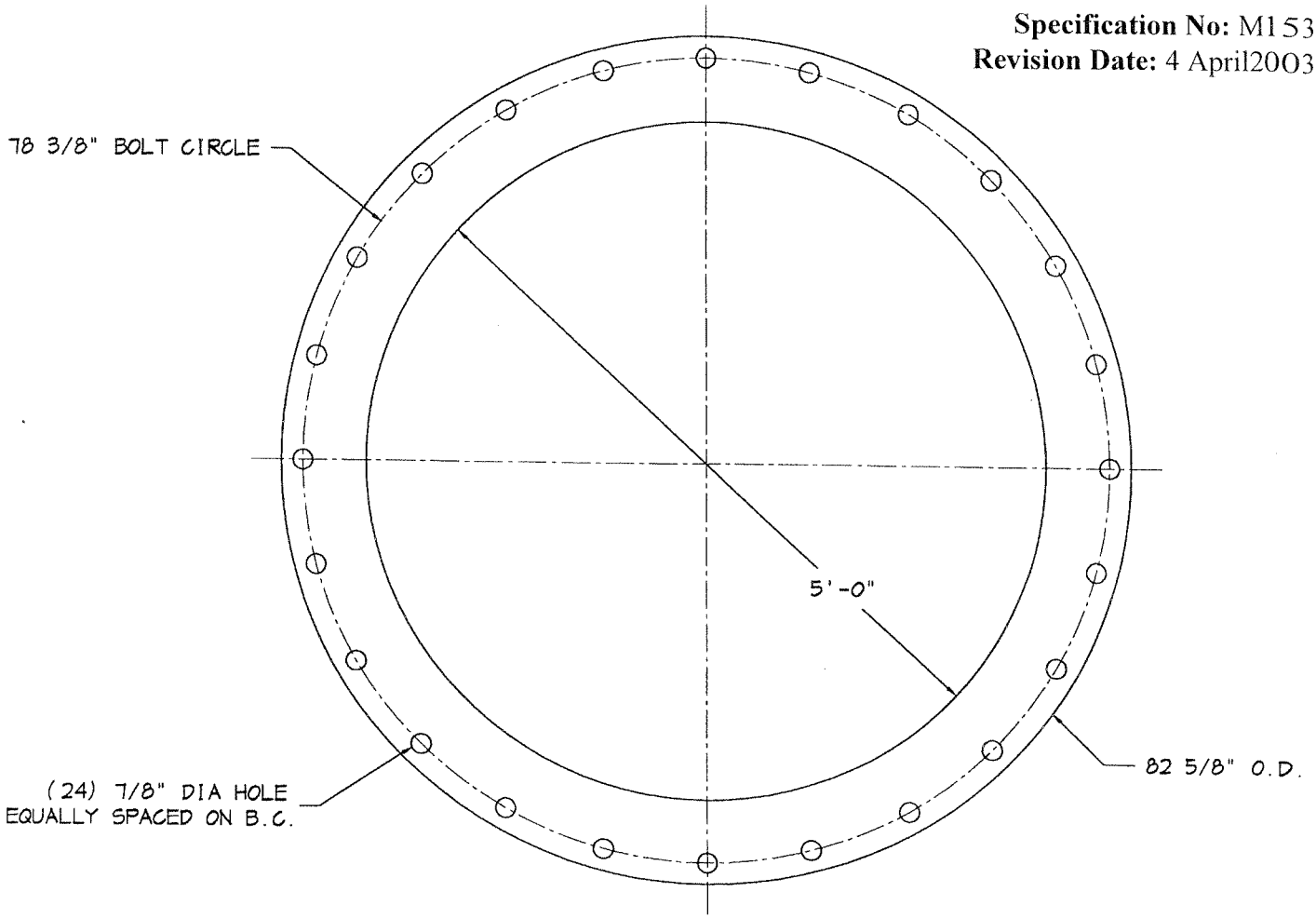

DETAIL 6
EXHAUST DUCT TAILPIECE INTERFACE FLANGE

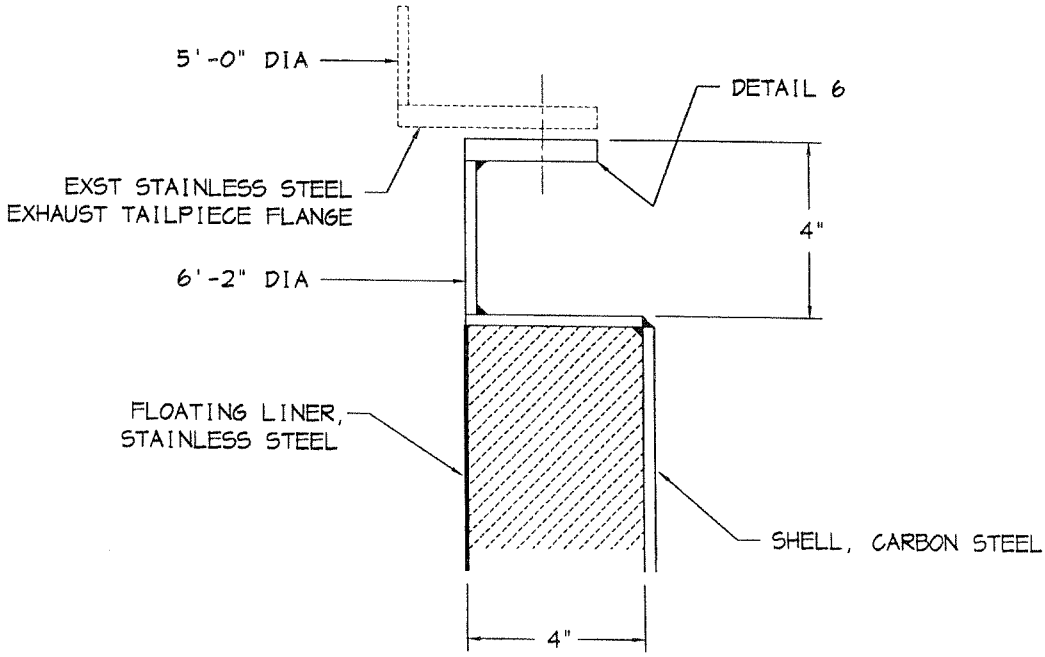

DETAIL 5
UPPER DUCT TO EXISTING TAILPIECE FLANGED CONNECTION