DISTRIBUTION LIST

ACTIVITY CODE	KIND	B	C	D	QUANTITY
NAVSEA 92J	D	1	1	1	
NAVSEA LANT	D	1	1	1	
NAVSEA PAC	D	1	1	1	
NAVELEX PDE 110-322	6	1	1	1	
NAVSEA PMS 393	G	1	1	1	
SPCC MECH CODE 6823	D	—	—	—	
TRIFFITFAC CODE 324	D	1	1	1	
NAVSSES 064	D	20	20	20	
NAVSSES 06022	S	1	1	1	
NAVSSES 06022	D	2	2	2	
NAVSSES 061	S	1	1	1	
NAVSSES 062	S	—	—	—	
NAVSSES 0623	S	1	1	1	
NAVSSES 063	S	2	—	—	
NESEC MORF CODE 240	D	1	1	1	
NAVSHIPS NPTWS	D	1	1	1	
NAVSHIPS GROTON	D	1	1	1	
NAVSHIPS PASCAGOULA	D	1	1	1	
NAVSHIPYD PTSMH CODE 202.1	S	1	1	1	
NAVSHIPYD CHARS	D	1	1	1	
NAVSHIPYD NORF	D	1	1	1	
NAVSHIPYD PEARL	D	1	1	1	
NAVSHIPYD PHILA	D	1	1	1	
NAVSHIPYD PTSMH CODE 2442	S	1	1	1	
NAVSHIPYD PUGET	D	1	1	1	
NAVSHIPYD S.F. BAY M.I	D	1	1	1	
NAVSHIPYD BRTWS SHIPS DG	D	1	1	1	
NAVSHIPYD GD/EB GROTON	D	1	1	1	
SUBMARINE TENDERS (ONE EACH-8 SETS)	D	12	12	12	
NAVSHIPS REP FACILITY GUAM	D	1	1	1	
NAVSHIPS REP FACILITY SUBIC BAY	D	1	1	1	
NAVSUBSYPFAC CODE 768 BLDG	D	1	1	1	
SUB BASE PEARL	D	1	1	1	
NUSL/BL 5342	D	1	1	1	
SPCC MECH CODE 0543	D	1	1	1	
TOTALS: SILVER HALIDE APERT CARD *	S	3	3	3	
DIAZO APERT CARD *	D	57	57	57	
VANDYKE/SEPIA	V	—	—	—	
BLUE PRINT/BLUELINE	B	5	3	3	
DATE AUTHOR ED	MM	04	04	08	
	DD	17	21	88	
	YY	85	86	85	

* MICROFILM SHALL BE IN ACCORDANCE WITH MIL-M-9868 TYPE I CLASS I FOR SILVER HALIDE AND TYPE II CLASS 2 FOR DIAZO. .35 MM MICRO REPRODUCTION SHALL BE MOUNTED OR STANDARD TABULATING APERTURE CARDS WITH FORMATS AND CODING IN ACCORDANCE WITH THE LATEST ISSUE OF MIL-STD-804.

INDEX

SHEET NO	TITLE	REV
1	INDEX, MATL LIST, NOTES & REFERENCES	D
2	PLAN & SECTION 696 HULL ONLY	D
3	PLAN & ELEVATION 47'-11.88 ABL	D
4	PLAN & ELEVATION 45'-11.88 — 47'-11.88 ABL	D

PARTS AND MATERIAL LIST

	ITEM	NAME		QTY	MATL	SPEC	REMARKS	NOTE 3	ZONE
	1	PLATE, MOUNTING, STBD	1/2 PL	1	STEEL	MIL-S-22698	GR EH, 36T		12-B
	2	PLATE, STIFFENER	1/2 PL	2	STEEL	MIL-S-22698	GR EH, 36T		15-B
	3	PLATE, STIFFENER	1/2 PL	1	STEEL	MIL-S-22698	GR EH, 36T		15-A
	4	COAMING	1/2 PL	1	STEEL	MIL-S-22698	GR EH, 36T		15-B
	5	COAMING	1/2 PL	1	STEEL	MIL-S-22698	GR EH, 36T		12-A
	6	GUSSET	1/2 PL	2	STEEL	MIL-S-22698	GR EH, 36T		12-B
4	7	PAD, SUPPORT	1/2 PL	1	STEEL	MIL-S-22698	GR EH, 36T		15-B
4	8	RIB	1/2 PL	2	STEEL	MIL-S-22698	GR EH, 36T		15-B
4	9	NUT, HEX 1/2 - 13 UNC - 3B		2	NI-CU	QQ-N-281	MIL-B-857		12-B
	10	PLATE, MOUNTING, PORT	1/2 PL	1	STEEL	MIL-S-22698	GR EH, 36T		23-A
	11	PLATE, STIFFENER	1/2 PL	1	STEEL	MIL-S-22698	GR EH, 36T		23-C
	12	COAMING	1/2 PL	1	STEEL	MIL-S-22698	GR EH 36T		20-A
	13	COAMING	1/2 PL	1	STEEL	MIL-S-22698	GR EH 36T		20-A
4	14	PLATE, MOUNTING	1/2 PL	1	STEEL	MIL-S-22698	GR EH 36T		31-A
4	15	PLATE, SUPPORT	1/2 PL	1	STEEL	MIL-S-22698	GR EH 36T		31-A

GENERAL NOTES

1. THIS DRAWING IS DEVELOPED TO PROVIDE DETAILS FOR SAIL STRUCTURAL MODIFICATIONS REQUIRED FOR INSTALLATION OF AN/BRD-7, AN/BLD-1 ANTENNA CLOSURE DOORS.
2. INTERPRETATION OF THIS DRAWING SHALL BE IAW THE FOLLOWING STANDARDS FOR ENGINEERING DRAWING PRACTICES: DOD-STD-100, USASI Y14.5, AND ASA B46.1.
3. MATERIAL IDENTIFICATION AND CONTROL REQUIREMENTS: THE IDENTITY OF MATERIALS SHALL BE VERIFIED BY VISUAL (NON-METALLIC) OR ACID AND HARDNESS TESTS (WHERE MATERIAL SPECIFICATION SHOWS HARDNESS VALUES).
4. ALL PHASES OF WELDING SHALL BE AS REQUIRED BY NAVSHIPS 0902-001-5000 AND MIL-STD-278 WHICH INVOKES THE FOLLOWING SPECIFICATIONS: (A) MIL-STD-248 - QUALIFICATION TEST FOR WELDERS. (B) MIL-STD-271 - NON-DESTRUCTIVE TESTING OF WELDS. (C) NAVSHIPS 0900-003-8000 - SURFACE INSPECTION ACCEPTANCE STANDARDS FOR METALS. (D) NAVSHIPS 0900-003-9000 - RADIOGRAPHIC STANDARDS FOR PRODUCTION AND REPAIR OF WELDS. (E) MIL-STD-1688 (SH) - FABRICATION WELDING AND INSPECTION OF HY-80 SUBMARINE HULLS. (F) MIL-STD-1869 FABRICATION WELDING AND INSPECTION OF NON HY-80 SUBMARINE HULLS.
5. 12-A ALL DETAILS, SECTIONS, TABLES, ETC. ARE IDENTIFIED BY LABELS SUCH AS 12-A (VIEW IN ZONE 12-A).
   15-A SUB LABELS REFER TO RELATED VIEWS, TABLES, ETC. SUCH AS 15-A (VIEW IN ZONE 15-A).

REVISIONS

REV	ZONE	DESCRIPTION	DATE	APPROVED
—		ORIGINAL ISSUE PER 012083 DESIGN TASK		
A	NOTES	ADDED SUB LABEL(7) TO NOTE 4 AUTH 012083 DESIGN TASK	4-27-84	
B	SH 1	(1) L/M: ITEM 7, QTY WAS 2; ITEM 8, NAME WAS GUSSET, 1/2 PL WAS 3/8 PL; ITEM 9, QTY WAS 4; TITLE BLOCK, SH 1 OF 4 WAS 1 OF 3.		
	SH 2	(2) ZONE 9-B: ADDED HULL APPLICABILITY NOTE; (3) ZONE 15-A: CUT AWAY SECTION OF EXISTING STRUCTURE TO CLEAR DOOR ARM.		
	SH 3	(4) ZONE 19-D & 23-C: CUT AWAY EXISTING STRUCTURE TO CLEAR DOOR MECHANISM; (5) ZONE 23-C: 10.00 REF WAS 8.25 REF.		
	SH 4	(6) ADDED SH 4 AND HULL APPLICABILITY, CBT REQD TO CLEAR F/W ANTENNA CONDUIT. DWG REVISED TO REFLECT AS INSTALLED CONDITION ON SSN696, 1-10-85 AUTH: 110584 DESIGN TASK	3-29-85 3-8-85	SHB SEF
C	— SH 3&4	1) ADDED ITEMS 14 & 15.		
	SH 4	2) DIMEN TO ℄ CART BRG WAS 25.25.		
	EAM	3) ITEMS 1, 7 & 8 REDESIGNED AND VIEWS ON SHEET 4 MODIFIED TO SUIT. AUTH: 020686 DESIGN TASK	4-2-86	SEF
D	SH 1	(1) ADDED REF 4.		
	SH 3	(2) ADDED SECT 18-B. (3) 20-A: DELETED PC 6. (4) 20-B: DELETED PC 6; PC 2 RELOCATED; DIM 13.75 MIN AFT OF FAIRING CL SUPERSEDES DIM 23.50. (5) 23-A: DELETED DIM 6.50 REF & 3.00; ADDED HANDHOLE AND ADDED DIM 13.75 & 9.09 FROM CL OF FAIRING. (6) 23-C: PC 11 MODIFIED.		
	SH 4	(7) 26-A: DIM 12.44 NOM SEE NOTE & 1.25 NOM SEE NOTE WAS 12.44 TYP & 1.25 TYP RESP; DIM 5.00 WAS 4.00; PC 2 MODIFIED. (8) 27-A: PC 3 MODIFIED. (9) 27-C: DIM 6.50 & 13.00 WAS 5.75 & 11.50 RESP. (10) 31-A: DELETED PC 6; ADDED DIM 5.00; AND DIM 3.00 WAS 2.00. (11) 31-C: DELETED PC 6; ADDED 1.00 DIA DRAIN HOLE; PC 8 CORRECTED; PC 2 RELOCATED; DIM 24.00 & 12.00 WAS 23.00 & 11.00 RESP. AUTH: 092688 DESIGN TASK.	8-18-89 8-25-89	

REFERENCES

NO.	TITLE	NAVSEA DRAWING NO.
4	NAVSEA PROCEDURE	0900-LP-024-3071
3	PENET - PRESS HULL FR 49-50 (DFS)	113-4863574
2	SSN688 FAIRWATER SECTIONS	111-4403802
1	RIPOUT	150-5361660

THIS PLAN HAS BEEN MICRO-FILMED AT PHILADELPHIA NAVAL SHIPYARD, AND APERTURE EAM CARD PREPARED FOR FILE.

DIMENSIONAL TOLERANCES & SURFACE FINISH — UNLESS OTHERWISE SPECIFIED							
DECIMALS		FRACTIONS		WELDMENTS		CASTINGS	
PLACES	± TOL	DIMENSION	± TOL	DIMENSION	± TOL	DIMENSION	TOLERANCE
XXX	0.05	< 6"	1/64	< 24"	.062	< 2"	+1/16 − 1/16
XX	02	6" TO 24"	1/32	≥ 24"	.125	2" TO 5"	+3/32 − 1/16
X	1	≥ 24"	1/16	ALL PLASTICS		5" TO 8"	+1/8 − 3/32
WHOLE NUMBERS ARE TOL ± .1				CONDITION	± TOL	8" TO 12"	+3/16 − 1/8
				MACHINED	.010	12" TO 18"	+1/4 − 3/16
				MOLDED	.035	≥ 18"	+1/4 − 1/4

(√) MACHINED SURFACE FINISHES = 125 MUIN (AA). BREAK ALL SHARP EDGES .01 TO .02. ALL ANGLES ± 0°30'. MATERIAL SPECIFICATION TOLERANCES APPLY TO STOCK SIZES. THREAD DIMENSIONS AND DESIGNATIONS TO BE IN ACCORDANCE WITH NATIONAL BUREAU OF STANDARDS HANDBOOK H-28 AND MIL-STD-8, RESPECTIVELY.

NAVAL SHIP SYSTEMS ENG STATION PHILADELPHIA, PA. 19112 CODE IDENT NO. 25685	DEPARTMENT OF THE NAVY NAVAL SEA SYSTEMS COMMAND WASHINGTON, D.C. 20362	
ENGINEERING BR HD	SSN 688 CL AN/BRD-7, AN/BLD-1 CLOSURE DOOR SAIL STRUCTURAL MODS	
FLEET SUPPORT BR HD		
MATL MGT BR HD		
TEST & EVLTN BR HD		
CONFIG MGR		
ENGRG SECT HD	BRD7 BLD1 CLOS DR SA STR MOD	
DESIGN SECT HD		
PROJ COORD		
CHECKER	SIZE D CODE IDENT 53711 SWBS 150 NAVSEA DRAWING NUMBER 5361661 REV D	
DRAFTSMAN		
APPROVED FOR NAVSEA	SCALE: NOT TO BE SCALED	SHEET 1 OF 4

SECTION IN MODEL SPACE

TOTAL

ASSY LB WT ☐ CALCULATED ☐ ACTUAL

⊕ CENTER OF GRAVITY ☐ CALCULATED ☐ ACTUAL

8 7 6 5 4 3 FOLD 2 1

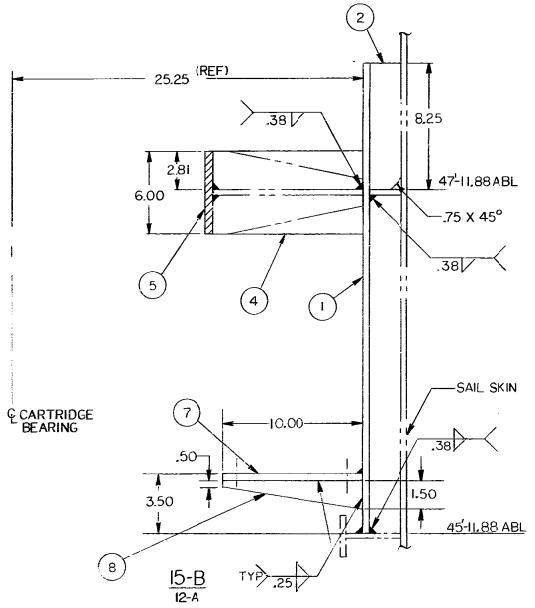

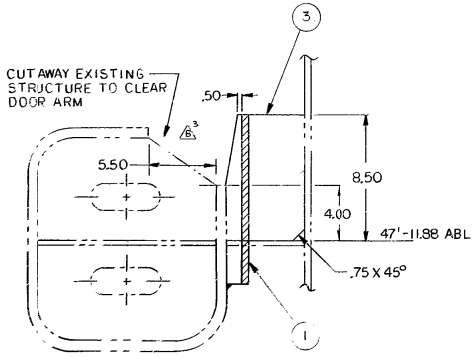

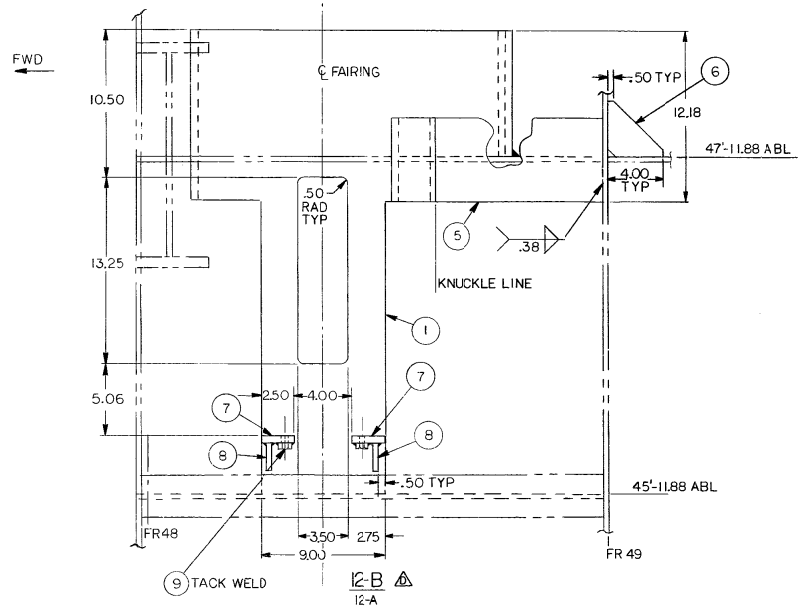

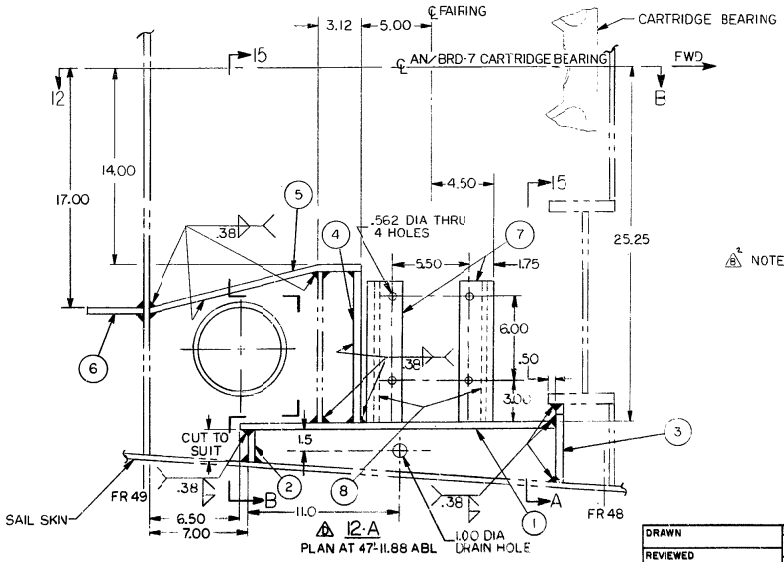

NOTE: THIS SHEET APPLICABLE TO SSN696 ONLY

DRAWN	SIZE	CODE IDENT	SWBS	NAVSEA DRAWING NUMBER	REV
REVIEWED	D	53711	150	5361661	D
	SCALE			SHEET 2 OF 4	

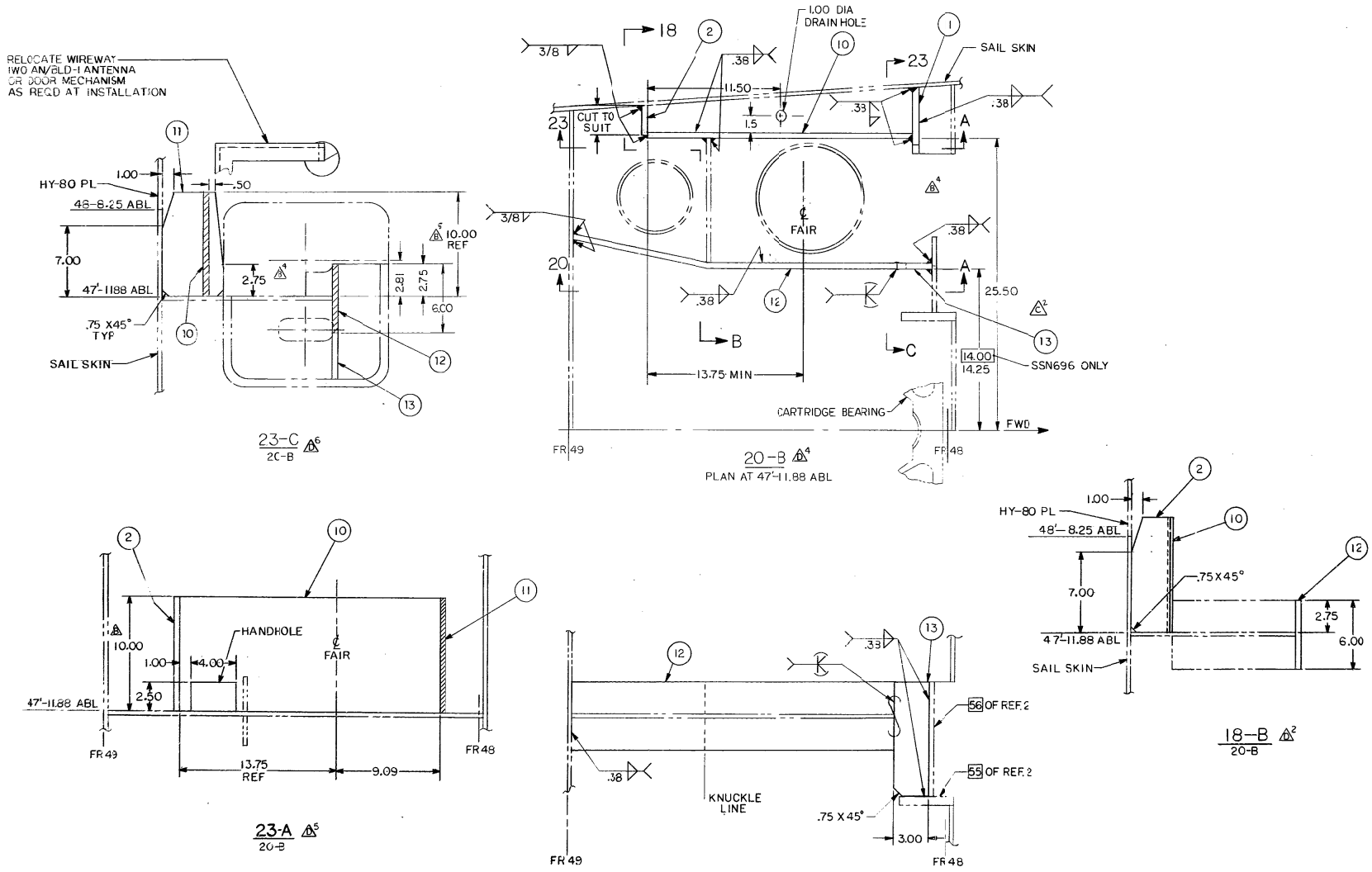

DRAWN	SIZE	CODE IDENT	SWBS	NAVSEA DRAWING NUMBER	REV
REVIEWED	D	53711	150	5361661	D
	SCALE			SHEET 3 OF 4	

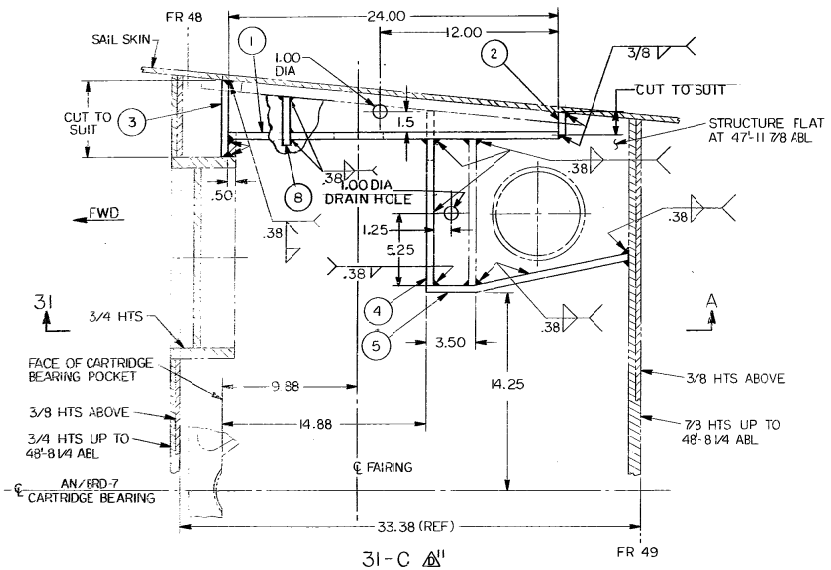

31-C 11

PLAN AT 47'-11.88 ABL

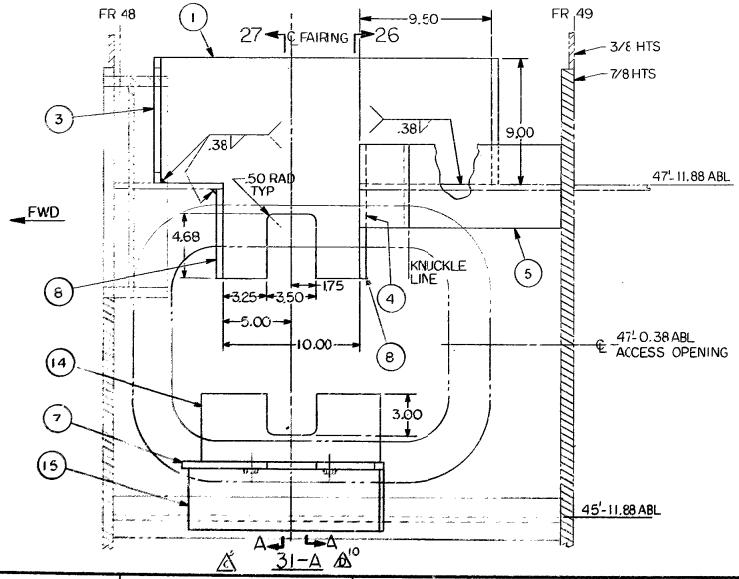

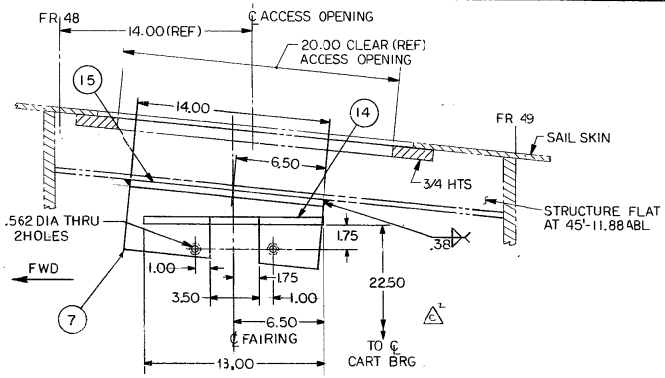

NOTE: THIS SHEET APPLICABLE TO HULLS SSN 688-695, 697-725 & 750

27-C 9

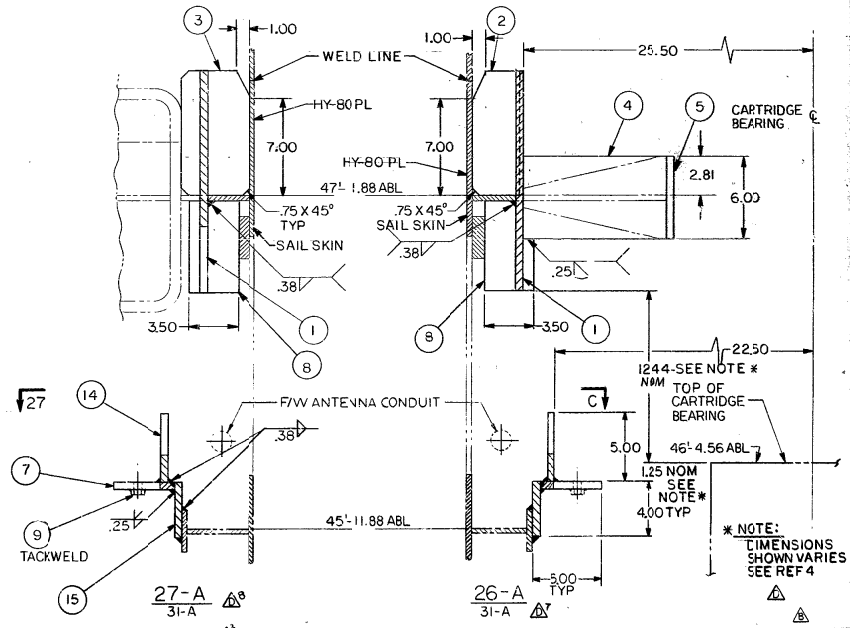

27-A 9
31-A

26-A 7
31-A

DRAWN	SIZE	CODE IDENT	SWBS	NAVSEA DRAWING NUMBER	REV
REVIEWED	D	53711	150	5361661	D
	SCALE			SHEET 4 OF 4	