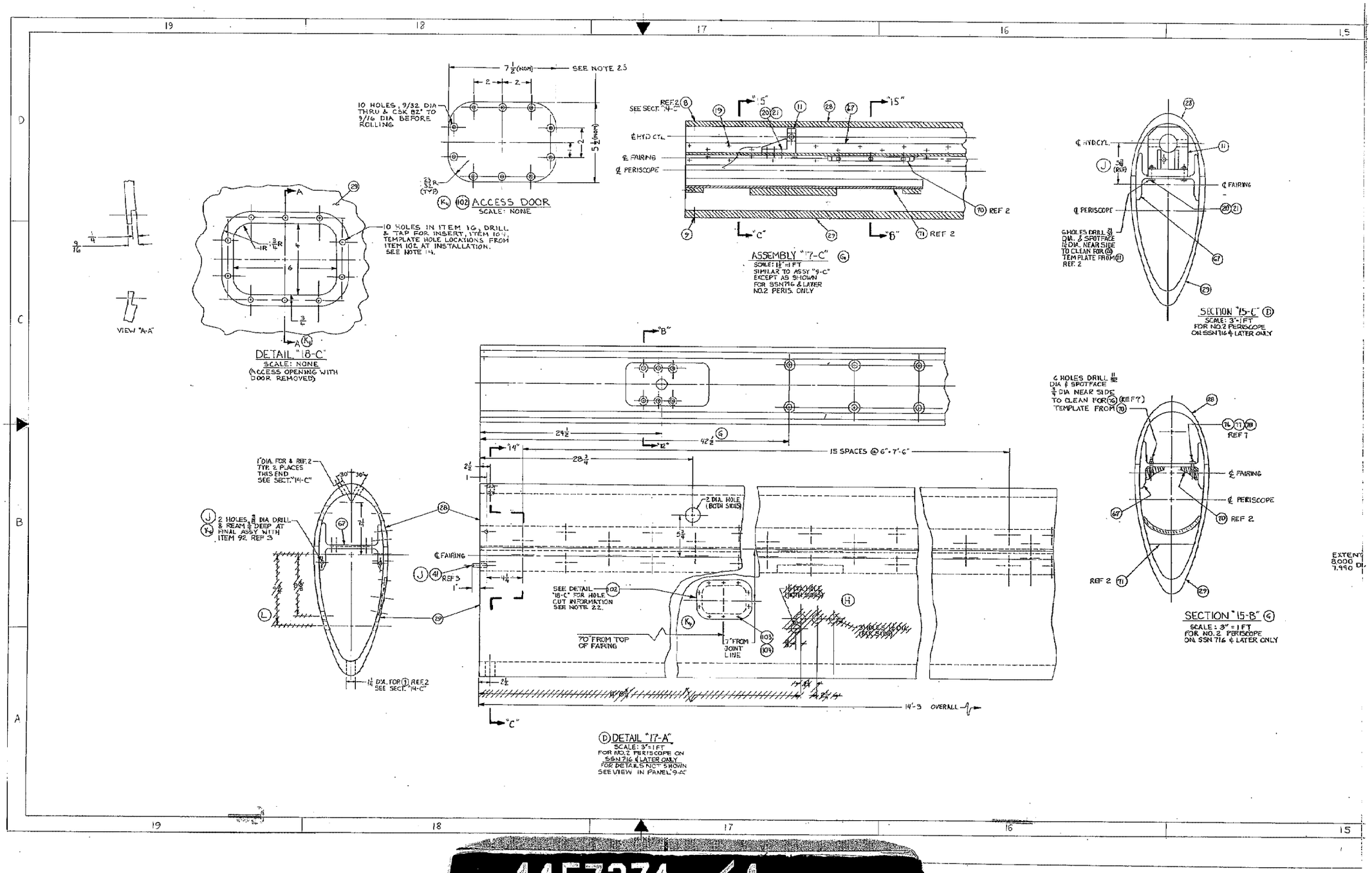
ACCESS DOOR
SCALE: NONE
10 HOLES, 9/32 DIA THRU & CSK 82° TO 9/16 DIA BEFORE ROLLING
SEE NOTE 2.3
DETAIL "18-C"
SCALE: NONE
(ACCESS OPENING WITH DOOR REMOVED)
10 HOLES IN ITEM 16, DRILL & TAP FOR INSERT, ITEM 104, TEMPLATE HOLE LOCATIONS FROM ITEM 102 AT INSTALLATION. SEE NOTE 14.
VIEW "A-A"
ASSEMBLY "17-C"
SCALE: 1½" = 1 FT
SIMILAR TO ASSY "9-C" EXCEPT AS SHOWN FOR SSN 716 & LATER NO.2 PERIS. ONLY
SECTION "15-C"
SCALE: 3" = 1 FT
FOR NO.2 PERISCOPE ON SSN 716 & LATER ONLY
SECTION "15-B"
SCALE: 3" = 1 FT
FOR NO. 2 PERISCOPE ON SSN 716 & LATER ONLY
DETAIL "17-A"
SCALE: 3" = 1 FT
FOR NO.2 PERISCOPE ON SSN 716 & LATER ONLY
FOR DETAILS NOT SHOWN SEE VIEW IN PANEL "9-A"
15 SPACES @ 6" = 7'-6"
14'-3 OVERALL
70" FROM TOP OF FAIRING
7" FROM JOINT LINE
SEE DETAIL "18-C" FOR HOLE CUT INFORMATION SEE NOTE 2.2.
2 DIA. HOLE (BOTH SIDES)
1" DIA. FOR & REF. 2 TYP. 2 PLACES THIS END SEE SECT. "14-C"
2 HOLES ⅜ DIA DRILL & REAM ⅜ DEEP AT FINAL ASSY WITH ITEM 92 REF 3
1½ DIA. FOR ① REF. 2 SEE SECT. "14-C"
℄ FAIRING
℄ PERISCOPE
℄ HYD CYL.
REF 2
REF 3
REF 1
EXTENT 8.000 7.990 DIA

4457274 / 1

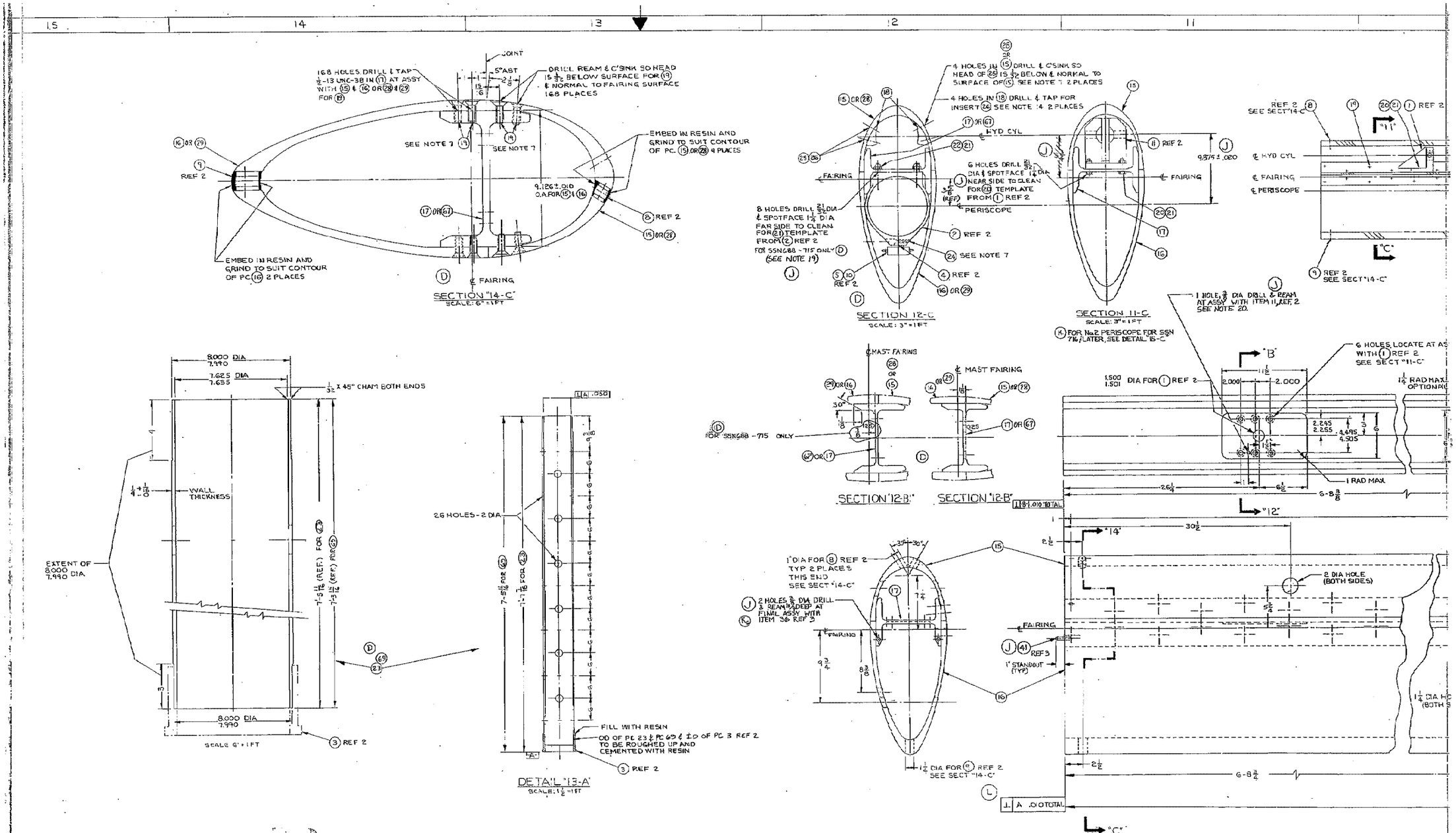
SECTION "14-C"
SCALE: 6" = 1 FT
SECTION 12-C
SCALE: 3" = 1 FT
SECTION 11-C
SCALE: 3" = 1 FT
SECTION "12-B"
SECTION "12-B"
DETAIL "13-A"
SCALE: 1½" = 1 FT
SCALE 6" = 1 FT
168 HOLES DRILL & TAP ¾-13 UNC-3B IN (11) AT ASSY WITH (15) & (16) OR (28) & (29) FOR (18)
DRILL REAM & C'SINK SO HEAD 15 3/32 BELOW SURFACE FOR (19) & NORMAL TO FAIRING SURFACE 168 PLACES
EMBED IN RESIN AND GRIND TO SUIT CONTOUR OF PC. (15) OR (28) 4 PLACES
EMBED IN RESIN AND GRIND TO SUIT CONTOUR OF PC (16) 2 PLACES
9.126 ± .010 O.A. FOR (15) & (16)
4 HOLES IN HEAD OF (25) IS 3/32 BELOW & NORMAL TO SURFACE OF (15) SEE NOTE 7 2 PLACES
4 HOLES IN (18) DRILL & TAP FOR INSERT (24) SEE NOTE 14 2 PLACES
6 HOLES DRILL 21/32 DIA & SPOTFACE 1¼ DIA NEAR SIDE TO CLEAN FOR (20) TEMPLATE FROM (1) REF 2
8 HOLES DRILL 21/32 DIA & SPOTFACE 1¼ DIA FAR SIDE TO CLEAN FOR (21) TEMPLATE FROM (2) REF 2 FOR SSN688 -715 ONLY (SEE NOTE 19)
1 HOLE, ¾ DIA DRILL & REAM AT ASSY WITH ITEM 11, REF 2 SEE NOTE 20
FOR No. 2 PERISCOPE FOR SSN 716 & LATER, SEE DETAIL "B-C"
6 HOLES LOCATE AT ASSY WITH (1) REF 2 SEE SECT "11-C"
1.500 1.501 DIA FOR (1) REF 2
1 RAD MAX
2 DIA HOLE (BOTH SIDES)
1" DIA FOR (8) REF 2 TYP 2 PLACES THIS END SEE SECT "14-C"
2 HOLES ¾ DIA DRILL & REAM ¾ DEEP AT FINAL ASSY WITH ITEM 36 REF 3
1" STANDOUT (TYP)
1½ DIA FOR (9) REF 2 SEE SECT "14-C"
8.000 DIA 7.990
7.625 DIA 7.615
1/32 X 45° CHAM BOTH ENDS
WALL THICKNESS
EXTENT OF 8.000 DIA 7.990
26 HOLES - 2 DIA
FILL WITH RESIN
OD OF PC 23 & PC 69 & ID OF PC 3 REF 2 TO BE ROUGHED UP AND CEMENTED WITH RESIN
REF 2
SEE SECT "14-C"
FOR SSN688 -715 ONLY
HYD CYL
FAIRING
PERISCOPE
MAST FAIRING
SEE NOTE 7
SEE NOTE 14
J. A .010 TOTAL

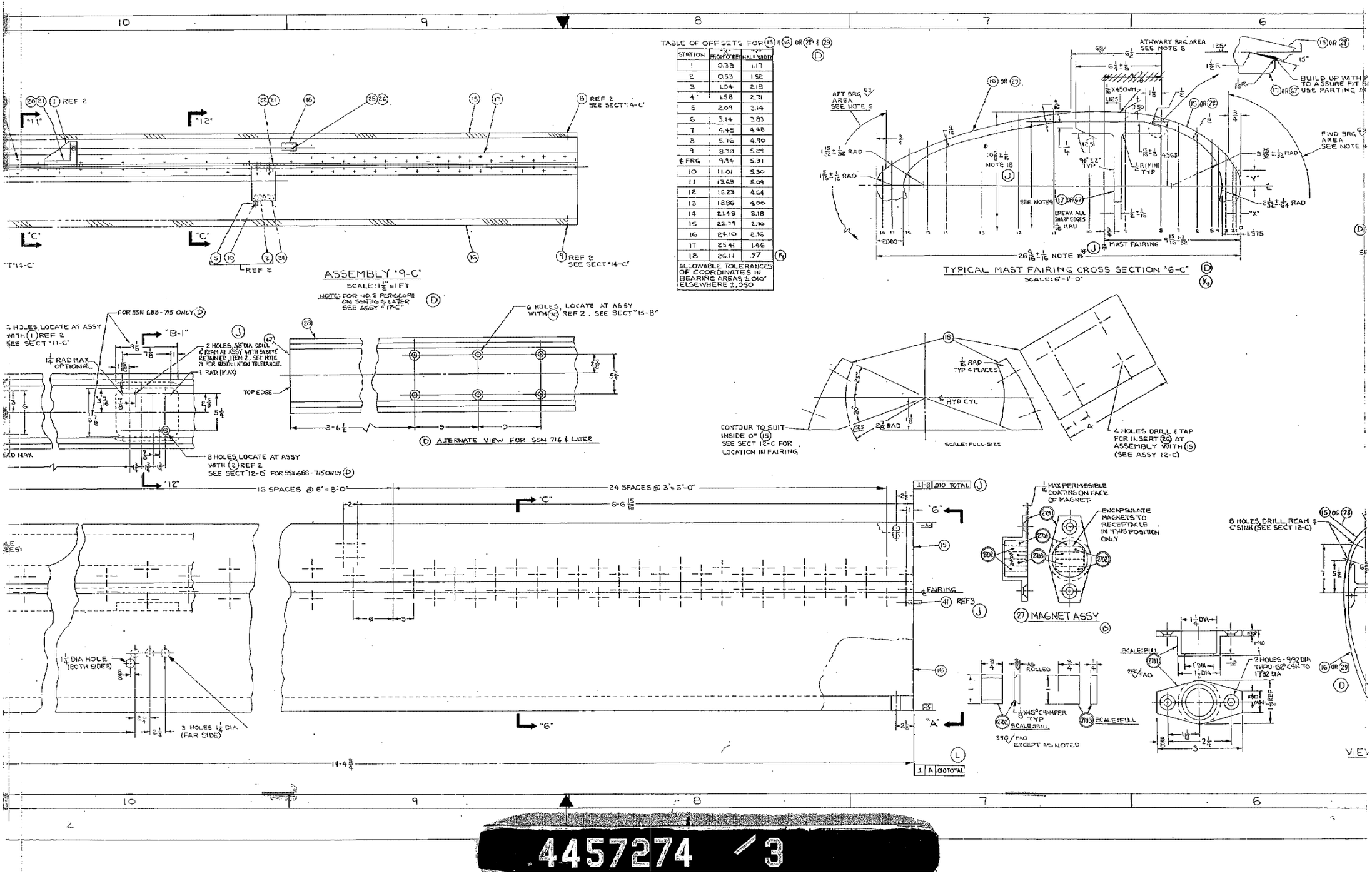

TABLE OF OFFSETS FOR (15) & (16) OR (28) & (29)

STATION	"X" FROM "O" REF	"Y" HALF WIDTH
1	0.33	1.17
2	0.53	1.52
3	1.04	2.18
4	1.58	2.71
5	2.09	3.14
6	3.14	3.83
7	4.45	4.48
8	5.76	4.90
9	8.38	5.29
℄ FRG	9.94	5.31
10	11.01	5.30
11	13.63	5.09
12	16.23	4.64
13	18.86	4.00
14	21.48	3.18
15	22.79	2.70
16	24.10	2.16
17	25.41	1.46
18	26.11	.97

ALLOWABLE TOLERANCES OF COORDINATES IN BEARING AREAS ±.010" ELSEWHERE ±.050

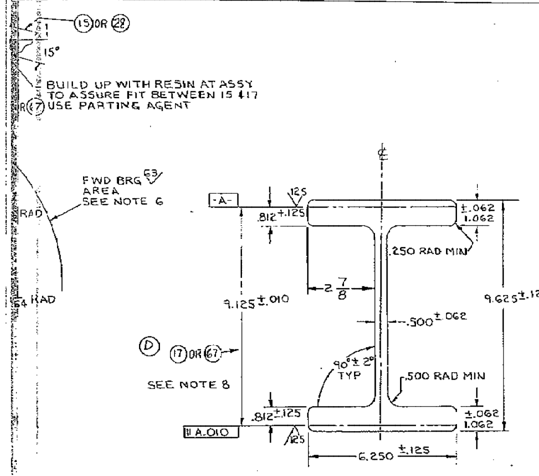

(K3) END VIEW ITEM 17 & 67
SHOWN FOR REFERENCE ONLY

97 QTY	98 QTY	99 QTY	ASSY NO / ITEM NO	REC LVL	ZONE	DESCRIPTION	MATL	MATL SPEC	GROUP NO.	NN SYM OR STOCK NO ASSY 98	NN SYM OR STOCK NO ASSY 99	REMARKS	NOISE CONT (SEE NOTE)	REV.
—	—	1	15		7B	MOLDED SECTION FWD	FIBERGLASS	NOTE 4	2070-4600-100	—	1740930	NOTES 6, 8 AND 18		J
—	—	1	16		7A	MOLDED SECTION AFT	FIBERGLASS	NOTE 4		—		NOTES 6, 8 AND 18		J
—	—	1	17		5C	I-BEAM SECTION	NI-CU-AL	QQ-N-286 CL A		—		NOTE 9; ORDERED ON REF 4 & 5		
2	2	2	18		7C	PAD	DELRIN	NOTE 10		1742015		NOTE 12		
168	168	168	19		—	SCREW, FH SOC SELF LOCKING 1/2-13UNC-2A x 1-3/8 LG	NI-CU	QQ-N-281 CL "A" CD				FF-S-86 AMEND 1 TYPE IV NOTE 15		
6	6	6	20		—	BOLT HEX HD 5/8-11UNC-2A x 2 1/4 LG	NI-CU-AL	QQ-N-286 CL "A" HEAN, AN OR CD, ANL, AH				MIL-B-857, AMEND 5, TY III MS-18116		K5
6	14	14	21		—	NUT - SELF-LKG 5/8-11UNC-3B	NI-CU	MIL-N-25027				MS 17829-10C		
—	8	8	22		—	SCREW - SOC HD CAP 5/8-11UNC-3A x 1-3/4 LG	NI-CU	QQ-N-281 CL "A" CD				—		
—	—	1	23		14A	SLEEVE, LOWER	FIBERGLASS	NOTE 4		1740931	1740931	NOTE 8		
—	3	3	24		—	SCREW, SOC HD CAP SELF LOCKING 1/2-13UNC-3A x 2-1/4	NI-CU	QQ-N-281 CL "A" CD		1742015	1740930	NOTE 15, FF-S-86 AMEND 1 TY VI		
8	8	8	25		—	SCREW, FH SOC SELF LOCKING 3/8-16UNC-2B x 1" LG	NI-CU	QQ-N-281 CL "A" CD				NOTE 15, FF-S-86 AMEND 1 TY IV		
8	8	8	26		—	HELI-COIL INSERT -3/8-16UNC-3B x 3/8	CRES	MIL-I-8846				NOTES 13 AND 14		
2	2	2	27		7B	MAGNET ASSEMBLY	SEE SUB-ITEM	SEE SUB-ITEMS	2070-4600-400	—	—	—		
2	2	2	2701		6A	MAGNET RECEPTACLE	NI-CU	QQ-N-281, CL "A" FORM 1 HF		97-36-714	97-36-714	? 12 --		
4	4	4	2702		7A	MAGNET RETAINER	STEEL	MIL-S-22698 TYPE I, CL "A"		97-20-203	97-20-203			
4	4	4	2703		7A	MAGNET	CERAMIC	COMMERCIAL		5000396	5000396	SEE NOTE 16		
AS REQ'D	AS REQ'D	AS REQ'D	2704		7B	EMBEDDING COMPOUND	EPOXY RESIN	COMMERCIAL		—	—	SEE NOTE 17		
1	1	-	28		17B	MOLDED SECTION, FWD.	FIBERGLASS	NOTE 4		1742015	—	NOTES 6, 8 & 18		D (J)
1	1	-	29		17A	MOLDED SECTION, AFT.	FIBERGLASS	NOTE 4			—	NOTES 6, 8 & 18		D (J)
1	1	-	67		5C	I-BEAM SECTION	NI-CU-AL	QQ-N-286, CLA			—	NOTE 9, ORDERED ON REF. 6		D
—	1	~	69		14A	SLEEVE, LOWER	FIBER GLASS	NOTE 4				NOTE 8		
—	1	—	102		18-C	ACCESS DOOR	CRES	QQ-S-766C CL 316L COND "A"				MAKE FROM 1/4" THK PLATE		K4
—	10	—	103		—	SCREW, FLAT HEAD MACHINE 1/4-28UNF x 1/2 LNG. SLF LKG	NI-CU	QQ-N-281 CL A-CD		—	—	SEE NOTE 15		
—	10	—	104		—	HELI-COIL INSERT 1/4-28UNF x .250	CRES	MIL-I-8846		—	—	SEE NOTES 13 & 14		

LIST OF MATERIAL — QUANTITIES ARE FOR ONE ASSY.

GENERAL NOTES:

1. MILITARY OR FEDERAL SPECIFICATIONS, STANDARDS, AND PUBLICATIONS REFERENCED ON THIS DRAWING SHALL BE THE ISSUE IN EFFECT ON NOVEMBER 1, 1969 UNLESS OTHERWISE SPECIFIED.
2. WHERE NEWPORT NEWS PROCEDURES ARE INDICATED, EQUIVALENT PROCEDURES, WHICH MEET THE SPECIFICATION REQUIREMENTS, MAY BE USED EITHER AT NEWPORT NEWS OR AT OTHER SHIPYARDS.
3. MACHINING OF THREADS TO BE IN ACCORDANCE WITH NBS HANDBOOK H-28.
4. (D) PC'S 15, 16, 23, 28, 29 & 69 TO BE FIBERGLASS REINFORCED PLASTIC LAM. IN ACCORD. WITH MIL-P-17549 GRADE I. THE REINFORCED PLASTIC LAMINATE MAY ALSO BE FABRICATED USING AN EPOXY RESIN COMPLYING WITH MIL-SPEC MIL-R-9300, AS WELL AS THE POLYESTER RESIN CALLED OUT IN MIL-SPEC MIL-P-17549. MECHANICAL PROPERTIES OF THE FIBERGLASS REINFORCED PLASTIC LAMINATE SHALL BE AS LISTED BELOW:
   - FLEXURAL STRENGTH (LENGTHWISE, CROSSWISE) .... 53,000 PSI
   - FLEXURAL MODULUS (LENGTHWISE, CROSSWISE) .... 2.5 x 10^6 PSI
   - TENSILE STRENGTH (LENGTHWISE, CROSSWISE) .... 53,000 PSI
   - COMPRESSIVE STRENGTH (EDGEWISE, LENGTHWISE, CROSSWISE) .... 28,000 PSI
   - SHEAR STRENGTH .... 25,000 PSI
5. (J) ~~(A) DIMENSIONS MARKED THUS * IN SECTION "6-C" SHALL NOT VARY FROM THE MEAN BY MORE THAN 0.025" THROUGHOUT THE ENTIRE LENGTH OF THE ASSEMBLED FAIRING.~~
   ~~(B) THE ASSEMBLED MAST FAIRING SHALL BE STRAIGHT WITHIN 0.040" T.I.R. THROUGHOUT ITS ENTIRE LENGTH. MEASUREMENTS ARE TO BE TAKEN IN THE FWD, AFT AND ATHWARTSHIP'S BEARING AREAS. DEFLECTION FROM THE FAIRINGS OWN WEIGHT IS NOT TO BE INCLUDED IN THE 0.040" T.I.R.~~
6. A 9" LONG MASTER BEARING BLOCK FOR EACH OF THE FOUR BEARING SURFACES SHAPED PER DIMENSIONS SHOWN IN SECTION "6-C" SHALL INDICATE 50% MINIMUM AREA CONTACT IN ANY 9" LENGTH INCREMENT WHEN RUBBED ALONG THE FULL LENGTH OF THE MAST FAIRING.
7. LUBRICATE THREADS ON PIECES 19, 24 & 25 WITH MOLYKOTE PRIOR TO ASSEMBLY.
8. (D) ALL HOLES AND EDGES IN ITEMS 15, 16, 23, 28, 29 & 69 TO BE COATED WITH RESIN.
9. (D) ITEMS 17 & 67 SWEEP AND CAMBER TO BE 1/8" MAXIMUM IN 20 FT. MATERIAL TO BE "K" MONEL QQ-N-286 EXTRUDED AND AGE HARDENED AND HAVE THE FOLLOWING MINIMUM PHYSICAL PROPERTIES:
   YP – 90,000 PSI (@ .2% OFFSET); ULT – 130,000 PSI; EL – 20% IN 2 INCHES.
10. ITEM 18 TO BE "DELRIN" COMP #150 AS MANUFACTURED BY E.I. DUPONT DE NEMOURS AND CO. INC., WILMINGTON, DEL., OR EQUAL.
11. PCS 15 AND 16 – TOLERANCES FOR MOLDING, FABRICATION AND ASSEMBLY, EXCEPT AS NOTED AT DETAIL, TO BE AS FOLLOWS:
    - (A) ASSEMBLY SCREW PATTERN DIMENSIONS: UNDER 10 FT – ± 1/16"; OVER 10 FT ± 1/8".
    - (B) LOCATING DIMENSIONS FOR HOLES, CUTOUTS, HARDWARE AND GENERAL ASSEMBLY RELATIONSHIP DIMENSIONS: UP TO 24"–±1/32", OVER 24" ± 1/16".
    - (C) END AND EDGE CHAMFERS: ± 1/32".
    - (D) COUNTERSINK DEPTH FOR SCR HDS: FROM 1/32" TO 1/16" BELOW SURFACE.
    - (E) MAXIMUM GAP BETWEEN FWD AND AFT SECTION (JOINT): 1/16".
    - (F) WALL THICKNESS FWD AND AFT SECTION: + 1/16", – 1/32".
12. DELRIN, PIECE 18, TO BE ANNEALED PRIOR TO MACHINING AS FOLLOWS:
    - (A) COMPLETELY IMMERSE IN ANNEALING OIL "NUJOL" (PLOUGH INC.), "PRIMOL 355" (ESSO DIVISION OF HUMBLE OIL AND REFINING CO.) OR "CHEVRON WHITE OIL NO. 15 (STANDARD OIL CO., OF CALIF. WESTERN OPERATIONS INC.) AT ROOM TEMPERATURE. NOTE: THOROUGH AGITATION MUST BE PROVIDED TO ASSURE UNIFORM BATH TEMPERATURE. PARTS SHOULD NEITHER CONTACT EACH OTHER NOR THE WALLS OF THE BATH.
    - (B) HEAT THE ANNEALING OIL AND DELRIN TO 320° F ± 3° F (A TEMPERATURE OF 325° F MUST NOT BE EXCEEDED) AND HOLD FOR ONE HOUR PER INCH OF THICKNESS OF THE MATERIAL.
    - (C) REMOVE DELRIN FROM HOT ANNEALING OIL AND ALLOW TO COOL IN AN INSULATED DRAFT FREE CONTAINER TO ROOM TEMPERATURE. THE DELRIN SHOULD NOT BE STACKED WHILE IN THE CONTAINER.
13. ITEM 26 TO BE INSERT, CRES HELI-COIL AS MANUFACTURED BY THE HELI-COIL CORP., DANBURY CONN., PART NO. 1185-6CN0375 OR EQUAL, & ITEM 104 CRES HELI-COIL INSERT No. 1191-4CN0250 AS DESCRIBED IN BULLETIN No. 900 & IS TO BE IAW MS-122038 AND MIL-I-8846.
14. (K4) INSTALL ITEMS 26 & 104, AS DESCRIBED ON THIS DRAWING AND MS33537.
15. ITEMS 19, 24, 25 & 103 TO HAVE SELF LOCKING ELEMENT IN ACCORDANCE WITH MIL-F-18240. PELLET ℄ TO BE 3/8" FROM END FOR ITEMS 19, 24 & 25.
16. (B) ITEM 2703 TO BE AS MANUFACTURED BY D.M. STEWARD MFG. CO. #994 OR EQUAL AND SHALL BE MAGNETIZED IN DIRECTION SHOWN IN MAGNET ASSEMBLY VIEW.
17. (B) ITEM 2704 TO BE EPOXY RESIN COMPOUND "ARCOSET 200" AS MANUFACTURED BY A. REIF & CO., PHILADELPHIA, PA. OR EQUAL.
18. (J) A) DIMENSIONS MARKED THUS * IN SECTION "6-C" SHALL NOT VARY FROM THE MEAN BY MORE THAN 0.025" THROUGHOUT THE ENTIRE LENGTH OF THE ASSEMBLED FAIRING, SEE SECTION 10, REFERENCE 8.
    B) THE ASSEMBLED MAST FAIRING SHALL BE STRAIGHT WITHIN 0.040 TIR THROUGHOUT ITS ENTIRE LENGTH. MEASUREMENTS ARE TO BE TAKEN IN THE FWD, AFT AND ATHWARTSHIP'S BEARING AREAS. DEFLECTION FROM THE FAIRINGS OWN WEIGHT IS NOT TO BE INCLUDED IN THE .040" TIR.
    C) THE TOTAL TWIST OF THE FAIRING SHALL NOT EXCEED .040 OF AN INCH. THE TOTAL TWIST IS DEFINED AS: WHEN MEASURED AT THE FORE & AFT EXTREMITIES THE SUM OF DIMENSIONS "A" & "B" SHALL NOT EXCEED .040 OF AN INCH, AS SHOWN BELOW.

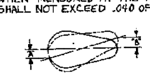

(NOTES CONT'D IN ZONE "4-B")

GEN. NOTES CONT'D

19. (L) (J) THE SLEEVE RETAINER, ITEM 2, SHALL BE ALIGNED WITHIN .030" RELATIVE TO THE ACTUAL PERISCOPE FORE-AFT & ATHWARTSHIP CENTERLINES. INSTALL DOWEL PINS, ITEM 101, ON REF 2, AFTER FINAL ALIGNMENT, SEE SECTION 10 REF. 8, FOR FURTHER INSTRUCTIONS.
20. THE PISTON ROD RETAINER SHALL BE INSTALLED 9.375 ± .020" FWD OF THE ACTUAL ATHWARTSHIP PERISCOPE CENTERLINE AND SHALL BE WITHIN ± 3 MINUTES OF TILT TO THE THEORETICAL VERTICAL CENTERLINE OF THE HYDRAULIC HOIST CYLINDER.
21. DOWEL PINS, ITEM 41, SHALL BE INSTALLED AFTER FINAL ALIGNMENT OF THE BEARING ADAPTOR PLATES, ITEMS 35, 36, 92 & 100. SEE REF 1.
22. (K4) AFTER INSTALLATION OF ACCESS DOOR, ALL HOLES & SPACES ARE TO BE FILLED WITH EPOXY RESIN (ITEM 2704) WHICH MEETS THE REQUIREMENTS OF MIL-R-9300, AND CONTOURED FLUSH WITH THE FAIRING SURFACE.
23. ACCESS DOOR, ITEM 102 TO BE ROLLED TO SUIT CONTOUR OF FAIRING, ITEM 29 & MACHINED TO PROVIDE A 1/32 TO 1/16 GAP WITH ITEM 16 AT INSTALLATION.

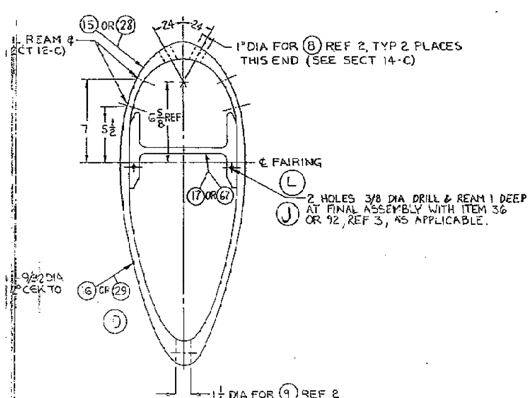

VIEW 6-A

REVISIONS

COST CHNG NO. N.N.	COST CHNG NO. NAVSEA	REV	ZONE	DESCRIPTION	DSGNR
5743	HMR 3936		1B	[1] REVISED: APPLICABILITY OF REV "J" TO S... IN LIEU OF INTERIM SSN 720, 724 & 725.	
—	—		8-C	[2] REVISED: STATION "18" IN TABLE OF O... AUTH. BY CMBDIII-M-1364 WHICH INC... 626D-TW-1863. APPLIC. TO SSN 72H...	
—	—	K15	5-C 6-C	[3] REVISED: CROSS SEC. "6-C", 1/4 DIM. DELETED: 4-1/8 DIM. IN SEC. "6-C". ADDED: 2-7/8 DIM. TO ITEMS 17 & 67. THIS... ORIZED BY CMBDIII-M-1213 WHICH IN... E.B. LAR 204929. APPLIC. TO SSN 725	
—	—		3-B 3-C 4-B 17-A 18-C 18-D	[4] ADDED: "FOR ITEMS 19, 24 & 25" TO... NOTES 22 & 23 TO GEN NOTES; ... 102; DETAIL "19-C"; ITEMS 102 & 10... DETAIL "17-A"; ITEM 104 TO L/M & NO... ITEM 103 TO NOTE 15. AUTHORIT... M-516 WHICH INCORPORATES EB... APPLIC. IS SSN719-750.	
—	—		3D	[5] REVISED: LENGTH OF ITEM 20 ... COLUMN OF L/M WAS "2". AUTH... M-1348 WHICH INCORPORATES E... APPLIC. IS SSN721 & LATER.	
—	—		12-A 18-A	[6] REVISED: DRILL NOTES IN ZO... 18-A WAS "...REAM 1 DEEP...". A... M-1440 WHICH INCORPORATES NN LAR 626D-M-2012. APPLIC. IS SSN721-725 & 750.	
—	—	L5	19B 8B 5A 7A 12A	DELETED: FROM ZONE 19-B, 9-3/4 & 8-3/8... FAIRING TO ℄ OF HOLE LOCATIONS. REVISED: NOTE 19, WAS "...ITEM 101, A... 6-A, CORRECTED LOCATION OF DOWEL... ADDED: TO ITEM 16, DIMENSIONAL TO... AUTHORITY IS CMBDIII-M-2210 WHICH IN... 628D-M-1582, EB 2086791 - NN 626D-M-2485. APPLIC. IS SSN722-750.	FFG

DIMENSIONAL TOLERANCES (IN INCHES) — UNLESS OTHERWISE NOTED

WELDMENT DIM.	WELDMENT TOL.	CASTING DIM.	CASTING TOL.	MACHINED DIM.	DECIMALS 2 PL	DECIMALS 3 PL	FRACTION	GEOMETRIC SYM	GEOMETRY	TOLERANCE
0 TO 12	± 1/8	UNDER 2	+ 1/16 – 1/16					⊥	PERPENDICULARITY	AS NOTED
12 TO 24	± 3/16	2 TO 6	+ 3/32 – 1/16	UNDER 6	± .01	± .005	± 1/64	⊕	TRUE POSITION	
24 TO 72	± 1/4	6 TO 8	+ 1/8 – 3/32	6 TO 18	± .02	± .010	± 1/32	◎	CONCENTRICITY	
72 & OVER	AS NOTED	8 TO 12	+ 3/16 – 1/8	18 TO 36	± .03	± .015	± 1/16			
		12 TO 15	+ 1/4 – 3/16	36 & OVER	± .04	± .020	± 1/8			
		15 TO 30	+ 1/4 – 1/4	ANGULAR — AS NOTED						
		30 & OVER	AS NOTED	FILLETS & RADII TO BE 1/16 TO 1/8						
		FILLETS & RADII – AS NOTED		FINISH SYMBOLS – ASA B46.1						
				MACHINING OF THREADS – NBS H-28						

	NO	TITLE	
(J)	8	INSTALLATION & ALIGNMENT No 1 (TYPE 2F) & No 2 (TYPE 18B) PERISCOPE SYSTEM	29847?
(G)	7	NO. 2 PERISCOPE FAIRING ASSEMBLY	2070-?
	6	NO. 2 PERISCOPE I-BEAM-P.O. USE ONLY	2070-?
(D)	5	NO. 2 PERIS FRG I-BEAM-P.O. USE ONLY	2070-?
	4	NO. 1 PERIS FRG I-BEAM-P.O. USE ONLY	2070-5?
	3	NO. 1 & 2 PERISCOPE FAIRING DET 3	2070-4?
	2	NO 1 & 2 PERISCOPE FAIRING DET 1	2070-4?
	1	NO 1 & 2 PERISCOPE FAIRING ASSY	2070-2?

REFERENCES

4457274 / 4

UNCLASSIFIED

4 | 3 | 2 | 1

LIST OF MATERIAL

QUANTITIES ARE FOR ONE ASSY.

QTY 99	ITEM NO	NIC LVL	ZONE	DESCRIPTION	MAT'L	MAT'L SPEC	GROUP NO.	NN SYM OR STOCK NO ASSY 98	NN SYM OR STOCK NO ASSY 99	REMARKS	NOISE CONT (SEE NOTE)	REV.
1	15		7B	MOLDED SECTION FWD	FIBERGLASS	NOTE 4	2070-4600 100	—	1740930	NOTES 6,8 AND 18		J
1	16		7A	MOLDED SECTION AFT	FIBERGLASS	NOTE 4		—		NOTES 6,8 AND 18		J
1	17		5C	I-BEAM SECTION	NI-CU-AL	QQ-N-286 CL A		—		NOTE 9, ORDERED ON REF 4 & 5		
2	18		7C	PAD	DELRIN	NOTE 10		1742015		NOTE 12		
168	19		—	SCREW FH SOC 1/2-13UNC-2A x 1-3/4 LG SELF LOCKING	NI-CU	QQ-N-281 CL "A" CD				FF-S-86 AMEND 1 TYPE IV NOTE 15		
6	20		—	BOLT HEX HD 5/8-11UNC-3A x 2 1/4 LG	NI-CU-AL	QQ-N-286 CL "A" FEANL, AH OR CD ANL, AH				MIL-S-857, AMEND 5, TY III MS-18116		K_5
14	21		—	NUT - SELF-LKG 5/8-11UNC-3B	NI-CU	MIL-N-25027				MS 17828-10C		
22	22		—	SCREW - SOC HD CAP 5/8-11UNC-3A x 1-3/4 LG	NI-CU	QQ-N-281 CL "A" CD				—		
1	23		14A	SLEEVE, LOWER	FIBERGLASS	NOTE 4		1740931	1740931	NOTE 8		
3	24		—	SCREW, SOC HD CAP 1/2-13UNC-3A x 2-1/4 SELF LOCKING	NI-CU	QQ-N-281 CL "A" CD		742015	1740930	NOTE 15, FF-S-85 AMEND 1 TY VI		
22	25		—	SCREW FH SOC 3/8-16UNC-2A x 1" LG SELF LOCKING	NI-CU	QQ-N-281 CL "A" CD				NOTE 15, FF-S-85 AMEND 1 TY IV		
2	26		—	HELI-COIL INSERT -3/8-16UNC-3B x 3/8	CRES	MIL-I-8846				NOTES 13 AND 14		
2	27		7B	MAGNET ASSEMBLY	SEE SUB ITEM	SEE SUB ITEMS	2070-4600-400	—	—	—		
2	2701		6A	MAGNET RECEPTACLE	NI-CU	QQ-N-281, CL "A" FORM 1 HF		97-36-714	97-36-714			
4	2702		7A	MAGNET RETAINER	STEEL	MIL-S-22698 TYPE 1, CL "A"		97-20-203	97-20-203			
4	2703		7A	MAGNET	CERAMIC	COMMERCIAL		5000356	5000356	SEE NOTE 16		C
AS REQD	2704		7B	EMBEDDING COMPOUND	EPOXY RESIN	COMMERCIAL		—	—	SEE NOTE 17		
-	28		17B	MOLDED SECTION, FWD.	FIBERGLASS	NOTE 4		1742015	—	NOTES 6, 8 & 18		D (J)
-	29		17A	MOLDED SECTION, AFT.	FIBERGLASS	NOTE 4			—	NOTES 6, 8 & 18		D (J)
-	67		5C	I-BEAM SECTION	NI-CU-AL	QQ-N-286, CLA			—	NOTE 9, ORDERED ON REF. 6		D
-	69		14A	SLEEVE, LOWER	FIBERGLASS	NOTE 4				NOTE 8		
-	102		18-C	ACCESS DOOR	CRES	QQ-S-766C CL 316L COND "A"				MAKE FROM 1/4" THK PLATE		K_4
-	103		—	SCREW, FLAT HEAD MACHINE 1/4-28UNF x 1/2 LNG. SLF LKG	NI-CU	QQ-N-281 CL A - CD	—		—	SEE NOTE 15		
--	104		—	HELI-COIL INSERT 1/4-28UNF x .250	CRES	MIL-I-8846	—		—	SEE NOTES 13 & 14		

GENERAL NOTES:

1. MILITARY OR FEDERAL SPECIFICATIONS, STANDARDS, AND PUBLICATIONS REFERENCED ON THIS DRAWING SHALL BE THE ISSUE IN EFFECT ON NOVEMBER 1, 1969 UNLESS OTHERWISE SPECIFIED.
2. WHERE NEWPORT NEWS PROCEDURES ARE INDICATED, EQUIVALENT PROCEDURES, WHICH MEET THE SPECIFICATION REQUIREMENTS, MAY BE USED EITHER AT NEWPORT NEWS OR AT OTHER SHIPYARDS.
3. MACHINING OF THREADS TO BE IN ACCORDANCE WITH NBS HANDBOOK H-28.
4. (D) PCS 15,16,23,28,29 & 69 TO BE FIBERGLASS REINFORCED PLASTIC LAM. IN ACCORD WITH MIL-P-17549 GRADE I. THE REINFORCED PLASTIC LAMINATE MAY ALSO BE FABRICATED USING AN EPOXY RESIN COMPLYING WITH MIL-SPEC MIL-R-9300, AS WELL AS THE POLYESTER RESIN CALLED OUT IN MIL-SPEC MIL-P-17549. MECHANICAL PROPERTIES OF THE FIBERGLASS REINFORCED PLASTIC LAMINATE SHALL BE AS LISTED BELOW:
   - FLEXURAL STRENGTH (LENGTHWISE, CROSSWISE) ______ 50,000 PSI
   - FLEXURAL MODULUS (LENGTHWISE, CROSSWISE) ______ 2.5×10^6 PSI
   - TENSILE STRENGTH (LENGTHWISE, CROSSWISE) ______ 50,000 PSI
   - COMPRESSIVE STRENGTH (EDGEWISE, LENGTHWISE, CROSSWISE) __ 28,000 PSI
   - SHEAR STRENGTH ______ 25,000 PSI
5. (J) ~~(A) DIMENSIONS MARKED THUS * IN SECTION "6-C" SHALL NOT VARY FROM THE MEAN BY MORE THAN 0.025" THROUGHOUT THE ENTIRE LENGTH OF THE ASSEMBLED FAIRING.~~
   ~~(B) THE ASSEMBLED MAST FAIRING SHALL BE STRAIGHT WITHIN 0.040" T.I.R. THROUGHOUT ITS ENTIRE LENGTH. MEASUREMENTS ARE TO BE TAKEN IN THE FWD, AFT AND ATHWARTSHIP'S BEARING AREAS. DEFLECTION FROM THE FAIRINGS OWN WEIGHT IS NOT TO BE INCLUDED IN THE 0.040" T.I.R.~~
6. A 9" LONG MASTER BEARING BLOCK FOR EACH OF THE FOUR BEARING SURFACES SHAPED PER DIMENSIONS SHOWN IN SECTION "6-C" SHALL INDICATE 50% MINIMUM AREA CONTACT IN ANY 9" LENGTH INCREMENT WHEN RUBBED ALONG THE FULL LENGTH OF THE MAST FAIRING.
7. LUBRICATE THREADS ON PIECES 19, 24 & 25 WITH MOLYKOTE PRIOR TO ASSEMBLY.
8. (D) ALL HOLES AND EDGES IN ITEMS 15,16,23,28,29 & 69 TO BE COATED WITH RESIN.
9. (D) ITEMS 17 & 67 SWEEP AND CAMBER TO BE 1/8" MAXIMUM IN 20 FT. MATERIAL TO BE "K" MONEL QQ-N-286 EXTRUDED AND AGE HARDENED AND HAVE THE FOLLOWING MINIMUM PHYSICAL PROPERTIES:
   YP - 90,000 PSI (@ .2% OFFSET); ULT - 130,000 PSI; EL - 20% IN 2 INCHES.
10. ITEM 18 TO BE "DELRIN" COMP #150 AS MANUFACTURED BY E.I. DUPONT DE NEMOURS AND CO. INC., WILMINGTON, DEL., OR EQUAL.
11. PCS 15 AND 16 - TOLERANCES FOR MOLDING, FABRICATION AND ASSEMBLY, EXCEPT AS NOTED AT DETAIL, TO BE AS FOLLOWS:
    - (A) ASSEMBLY SCREW PATTERN DIMENSIONS: UNDER 10 FT - ± 1/16"; OVER 10 FT ± 1/8".
    - (B) LOCATING DIMENSIONS FOR HOLES, CUTOUTS, HARDWARE AND GENERAL ASSEMBLY RELATIONSHIP DIMENSIONS: UP TO 24" ±1/32", OVER 24" ± 1/16".
    - (C) END AND EDGE CHAMFERS: ± 1/32".
    - (D) COUNTERSINK DEPTH FOR SCR HDS: FROM 1/32" TO 1/16" BELOW SURFACE.
    - (E) MAXIMUM GAP BETWEEN FWD AND AFT SECTION (JOINT): 1/16".
    - (F) WALL THICKNESS FWD AND AFT SECTION: + 1/16", - 1/32".
12. DELRIN, PIECE 18, TO BE ANNEALED PRIOR TO MACHINING AS FOLLOWS:
    - (A) COMPLETELY IMMERSE IN ANNEALING OIL "NYJOL" (PLOUGH INC.). "PRIMOL 355" (ESSO DIVISION OF HUMBLE OIL AND REFINING CO.) OR "CHEVRON WHITE OIL NO. 15 (STANDARD OIL CO., OF CALIF., WESTERN OPERATIONS INC.) AT ROOM TEMPERATURE. NOTE: THOROUGH AGITATION MUST BE PROVIDED TO ASSURE UNIFORM BATH TEMPERATURE. PARTS SHOULD NEITHER CONTACT EACH OTHER NOR THE WALLS OF THE BATH.
    - (B) HEAT THE ANNEALING OIL AND DELRIN TO 320° F ± 3° F (A TEMPERATURE OF 325° F MUST NOT BE EXCEEDED) AND HOLD FOR ONE HOUR PER INCH OF THICKNESS OF THE MATERIAL.
    - (C) REMOVE DELRIN FROM HOT ANNEALING OIL AND ALLOW TO COOL IN AN INSULATED DRAFT FREE CONTAINER TO ROOM TEMPERATURE. THE DELRIN SHOULD NOT BE STACKED WHILE IN THE CONTAINER.
13. (K_4) ITEM 26 TO BE INSERT, CRES HELI-COIL AS MANUFACTURED BY THE HELI-COIL CORP., DANBURY CONN., PART NO. 1185-6CN0375 OR EQUAL, & ITEM 104 CRES HELI-COIL INSERT No.1191-4CN0250 AS DESCRIBED IN BULLETIN No.900 & IS TO BE IAW MS-122038 AND MIL-I-8846.
14. INSTALL ITEMS 26 & 104, AS DESCRIBED ON THIS DRAWING AND MS33537.
15. ITEMS 19,24,25 & 103 TO HAVE SELF LOCKING ELEMENT IN ACCORDANCE WITH MIL-F-18240. PELLET ℄ TO BE 3/8" FROM END FOR ITEMS 19,24 & 25.
16. (B) ITEM 2703 TO BE AS MANUFACTURED BY D.M. STEWARD MFG. CO. #994 OR EQUAL AND SHALL BE MAGNETIZED IN DIRECTION SHOWN IN "MAGNET ASSEMBLY" VIEW.
17. (B) ITEM 2704 TO BE EPOXY RESIN COMPOUND "ARCOSET 200" AS MANUFACTURED BY A. REIF & CO., PHILADELPHIA, PA. OR EQUAL.
18. (J) A) DIMENSIONS MARKED THUS * IN SECTION "6-C" SHALL NOT VARY FROM THE MEAN BY MORE THAN 0.025" THROUGHOUT THE ENTIRE LENGTH OF THE ASSEMBLED FAIRING, SEE SECTION 10, REFERENCE 8.
    B) THE ASSEMBLED MAST FAIRING SHALL BE STRAIGHT WITHIN 0.040 TIR THROUGHOUT ITS ENTIRE LENGTH. MEASUREMENTS ARE TO BE TAKEN IN THE FWD, AFT AND ATHWARTSHIP'S BEARING AREAS. DEFLECTION FROM THE FAIRINGS OWN WEIGHT IS NOT TO BE INCLUDED IN THE .040" TIR.
    C) THE TOTAL TWIST OF THE FAIRING SHALL NOT EXCEED .040 OF AN INCH. THE TOTAL TWIST IS DEFINED AS: WHEN MEASURED AT THE FORE & AFT EXTREMITIES THE SUM OF DIMENSIONS "A" & "B" SHALL NOT EXCEED .040 OF AN INCH, AS SHOWN BELOW.

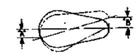

(NOTES CONT'D IN ZONE "4-B")

GEN. NOTES CONT'D

19. (L) (J) THE SLEEVE RETAINER, ITEM 2, SHALL BE ALIGNED WITHIN .030" RELATIVE TO THE ACTUAL PERISCOPE FORE-AFT & ATHWARTSHIP CENTERLINES. INSTALL DOWEL PINS, ITEM 101, ON REF 2, AFTER FINAL ALIGNMENT, SEE SECTION 10 REF. 8, FOR FURTHER INSTRUCTIONS.
20. THE PISTON ROD RETAINER SHALL BE INSTALLED 9.375 ± .020" FWD OF THE ACTUAL ATHWARTSHIP PERISCOPE CENTERLINE AND SHALL BE WITHIN ± 3 MINUTES OF TILT TO THE THEORETICAL VERTICAL CENTERLINE OF THE HYDRAULIC HOIST CYLINDER.
21. DOWEL PINS, ITEM 41, SHALL BE INSTALLED AFTER FINAL ALIGNMENT OF THE BEARING ADAPTOR PLATES, ITEMS 35,36,92 & 100. SEE REF 1.
22. (K_4) AFTER INSTALLATION OF ACCESS DOOR, ALL HOLES & SPACES ARE TO BE FILLED WITH EPOXY RESIN (ITEM 2704) WHICH MEETS THE REQUIREMENTS OF MIL-R-9300, AND CONTOURED FLUSH WITH THE FAIRING SURFACE.
23. ACCESS DOOR, ITEM 102 TO BE ROLLED TO SUIT CONTOUR OF FAIRING, ITEM 29 & MACHINED TO PROVIDE A 1/32 TO 1/16 GAP WITH ITEM 16 AT INSTALLATION.

REVISIONS

COST CHNG NO. N.N.	NAVSEA	REV	ZONE	DESCRIPTION	DSGNR	CHKR	N.N.S. DATE	AUTH	USN DATE	APVD
5743	HMR 3916		18	[1] REVISED: APPLICABILITY OF REV "J" TO SSN 721-725 & 750 IN LIEU OF INTERIM SSN 720,724 & 725.						
—	—		8-C	[2] REVISED: STATION "18" IN TABLE OF OFFSETS WAS 88. AUTH. BY CMBD III-M-1364 WHICH INCORP N.N. LAR 626D-TW-1863. APPLIC. TO SSN 721-750						
—	—	K^{15}	5-C 6-C	[3] REVISED: CROSS SEC. "6-C", 1/4 DIM. WAS 3/8. DELETED: 4-1/8 DIM. IN SEC. "6-C". ADDED: 2-7/8 DIM. TO ITEMS 17 & 67. THIS CHANGE AUTHORIZED BY CMBD III-M-1213 WHICH INCORPORATES E.B. LAR 204929. APPLIC. TO SSN 725 & 750						
—	—		3-B 3-C 4-B 17-A 18-C 18-D	[4] ADDED: "FOR ITEMS 19, 24 & 25" TO NOTE 15; NOTES 22 & 23 TO GEN NOTES; DETAIL OF ITEM 102; DETAIL "19-C"; ITEMS 102 & 103 TO L/M & DETAIL "17-A"; ITEM 104 TO L/M & NOTES 13 & 14; ITEM 103 TO NOTE 15. AUTHORITY IS CMBD III-M-516 WHICH INCORPORATES EB LAR 204481. APPLIC. IS SSN719-750.						
—	—	–	3D	[5] REVISED: LENGTH OF ITEM 20 IN DESCRIPTION COLUMN OF L/M WAS "2". AUTH IS CMBD III-M-1348 WHICH, INCORPORATES EB LAR 205726. APPLIC. IS SSN721 & LATER.						
—	—		12-A 18-A	[6] REVISED: DRILL NOTES IN ZONES 12-A & 18-A WAS "...REAM 1 DEEP...". AUTH IS CMBD III-M-1440 WHICH INCORPORATES NN LAR 626D-M-2012. APPLIC. IS SSN721-725 & 750.						
—	—	15	19B 4B 5A 7A 12A	DELETED: FROM ZONE 19-B, 9-3/4 & 8-3/8 DIM. FROM ℄ OF FAIRING TO ℄ OF HOLE LOCATIONS. REVISED: NOTE 19, WAS "...ITEM 101, AFTER..."; IN VIEW 6-A, CORRECTED LOCATION OF DOWEL HOLES. ADDED: TO ITEM 16, DIMENSIONAL TOLERANCES. AUTHORITY IS CMBD III-M-2210 WHICH INCORPORATES NN 628D-M-1582, EB 208679 & NN 626D-M-2485. APPLIC. IS SSN722-750.	FFG	GRB				

COST CHANGE NO. N.N.	NAVSHIPS	REV	ZONE	DESCRIPTION	NNSB&DDCO DATE	AUTHO	USN DATE	APVD
—	—	A	—	INITIAL ISSUE	—		—	
—	—	B	5D 7A 3B	ADDED PC 27 TO L/M & TO FACE OF PLAN. NOTES 16 & 17 ADDED TO GENERAL NOTES. ALL TO SUIT DESIGN DEVELOPMENT			—	
—	—	C	3D	ADDED N NEWS PART NO'S TO LIST OF MAT'L TO SUIT PE ITEM 298.			—	
—	—	D	2A, 3C, 5D, 6A, 6C, 8D, 9C, 12B, 12C, 14B, 14C, 15C, 16C, 17A	AUTHORIZED CHANGE. ADDED: DETAIL "17-A"; ASSY. "17-C"; SECTION "15C"; PCS.28,29,67 & 69 TO BODY OF DWG. & L/M; PCS.28,29 & 69 TO NOTES 4 & 8; PC.67 TO NOTE 9; REF. 6. THIS TO SUIT MOD 10 OF SSN 688 CLASS SHIPBUILDING SPECIFICATIONS. THIS INCORPORATES A BASIC CONTRACT MODIFICATION TO SUPPORT SSN 716 THRU 720.			—	
5017	HMR 2866P	E^{13}	5D, 9B, 10C, 12B, 13A, 13C, 15B, 17B, 17C, 2A	DELETED: ITEM 69 FROM L/M & DETAIL 15-A; QUANTITIES FOR ITEMS 22 & 24 FROM ASSY-98 COLUMN-IN L/M. QUANTITY OF MATERIAL FOR ITEM 21 OF ASSY 98 WAS 14. ADDED: APPLICABILITY FOR DETAILS TO ITEMS 17 & 67. HOLE SPACINGS TO DETAIL 17-A; SECTION 15-B; REF. 7 CHANGED: SECTION 16-C TO 17-C.			—	
—	—	F		ADDED: RESERVATION #1 TO REV "E". ALTERED REINSTATED ALL WORK DELETED BY REV E. NOTE: REV "E" CHANGES NOT AUTHORIZED FOR ISSUE. THIS IS A CLASS III CHANGE BY AUTHORITY OF CMBD-III-M-056. THIS IS APPLICABLE TO SSN 719 AND LATER			—	
5017	HMR 2866	G	6A, 9B, 10C, 12D, 13A, 13C, 11A, 15C, 17B, 17C	RESERVATION Nº 1 REMOVED AND REVISION E CANCELLED. ADDED: ASSY 97 TO L/M; APPLICABILITY FOR DETAILS TO ITEMS 17 & 67; HOLE SPACINGS TO DETAIL 17-A; SECTION 15-B; REF 7 CHANGED SECTION 16-C TO 17 C. THIS IS APPLICABLE TO SSN 719 & LATER.			—	
—	—	H	17A	DELETED: FOUR(4) - 1-1/4" DIA. HOLES IN PC 29, DETAIL "17-A". AUTHORITY IS CMBD-III-M-917 WHICH INCORPORATES NN LAR 625D-M-1850. APPLICABLE TO SSN 719-750.			—	
5743	HMR 3916	J	19-B, 18-B, 16-D, 12-C, 13-B, 12-D, 12-B, 11-D, 11-C, 10-B, 7-A, 7-D, 6-A, 4-C, 5-C, 5-D, 3-A, 2-A	DELETED: NOTE 5 & AND REFERENCE THERETO IN REMARKS COLUMN FOR ITEMS 15,16, 28 & 29; 5-3/4 DIM IN SECT. "11-C". REVISED: REFERENCE TO NOTE 18 IN SECT "6-C" WAS NOTE 5. ADDED: NOTE 18 AND REFERENCE THERETO IN REMARKS COLUMN FOR ITEMS 15,16, 28 & 29; DOWEL HOLES IN VIEW "6-A"; REFERENCE 8; NOTES 19, 20 & 21; DIMENSIONAL CONTROLS TO ITEMS 15 & 16; DOWEL, ITEM 41, AND DOWEL HOLES IN DETAIL "17-A" AND DETAIL OF ITEM 16; DRILL HOLES AND NOTE TO ASSY. "9-C" (REF) TO 5-3/4 DIM IN SECT. "15-C"; 3-5/8 REF DIM & REF TO NOTE 19 IN SECT. "12-C". 9.375 ± .020 DIM TO SECT. "11-C". DRILL NOTE IN ZONES "11-C" & "10-C". APPLICABILITY IS INTERIM SSN 720,724 & 725. FGF	8-19-75 HPR		—	

CONT'D AT LEFT

THIS DOCUMENT IS SUBJECT TO SPECIAL EXPORT CONTROLS AND EACH TRANSMITTAL TO FOREIGN GOVERNMENTS OR FOREIGN NATIONALS MAY BE MADE ONLY WITH PRIOR APPROVAL OF THE NAVAL SHIP SYSTEMS COMMAND.

DIMENSIONAL TOLERANCES (IN INCHES) — UNLESS OTHERWISE NOTED

WELDMENT DIM.	WELDMENT TOL.	CASTING DIM	CASTING TOL.	MACHINED D.M.	DECIMALS 2 PL	DECIMALS 3 PL	FRACTION	GEOMETRIC SYM	GEOMETRY	TOLERANCE
0 TO 12	± 1/8	UNDER 2	+ 1/16 – 1/16					⊥	PERPENDICULARITY	AS NOTED
12 TO 24	± 3/16	2 TO 5	+ 3/32 – 1/16	UNDER 6	± .01	± .005	± 1/64	⌖	TRUE POSITION	
24 TO 72	± 1/4	5 TO 8	+ 1/8 – 3/32	6 TO 18	± .02	± .010	± 1/32	◎	CONCENTRICITY	
72 & OVER	AS NOTED	8 TO 12	+ 3/16 – 1/8	18 TO 36	± .03	± .015	± 1/16			
		12 TO 15	+ 1/4 – 3/16	36 & OVER	± .04	± .020	± 1/8			
		15 TO 30	+ 1/4 – 1/4	ANGULAR — AS NOTED						
		30 & OVER	AS NOTED	FILLETS & RADII TO BE 1/16 TO 1/8						
		FILLETS & RADII — AS NOTED		FINISH SYMBOLS — ASA B46.1						
				MACHINING OF THREADS — NBS H-28						

REFERENCES

NO	TITLE	NNSB&DDCO	NAVSHIPS DRAWING NO.
(J) 8	INSTALLATION & ALIGNMENT Nº 1 (TYPE 2F) & Nº 2 (TYPE 18B) PERISCOPE SYSTEM	298477	43689-400-6016980
(G) 7	NO. 2 PERISCOPE FAIRING ASSEMBLY	2070-91	43689-400-5563839
6	NO.2 PERISCOPE I-BEAM-P.O. USE ONLY	2070-86	— (FOR SSN 716 & LATER)
(D) 5	NO.2 PERIS FRG I-BEAM-P.O. USE ONLY	2070-55	— (FOR SSN688-715)
4	NO.1 PERIS FRG I-BEAM-P.O. USE ONLY	2070-54	— (FOR SSN688-715)
3	NO. 1 & 2 PERISCOPE FAIRING DET 3	2070-48	43689-430-4451275
2	NO. 1 & 2 PERISCOPE FAIRING DET 1	2070-46	43689-430-4497060
1	NO. 1 & 2 PERISCOPE FAIRING ASSY	2070-26	43689-400-4457257

VESSELS ID NO.: SSN688, SSN689, SSN690, SSN691, SSN692, SSN693, SSN694, SSN695, SSN696, SSN697 — NNSB&DDCO 500

FORM 2 | TYPE I

STRUCTURAL CUTS APPD: NONE

APPROVAL CATEGORY: 3 | TECH APPROVAL: NOT REQ'D

CONTRACT: N00024-70-C-0238

N N DWG NO. 2070-47

MACHINERY DESIGN DIV. MACHINERY DES DEPT. A

NEWPORT NEWS SHIPBUILDING AND DRY DOCK COMPANY, NEWPORT NEWS, VIRGINIA 23607. A MAJOR COMPONENT OF TENNECO INC.

DRAWN RAB 4 72 | CHECKED ESS | SUPVR R.H. Radin | DATE 5-8-72 | STANDARD ... | DATE COMPLETED 5/9/72 | AUTHORIZED BJS

TITLE: **SSN688 CLASS SUBMARINE NO 1 & 2 PERISCOPE FAIRINGS DETAIL SHEET 2**

APPROVED: NAVY APP'L NOT REQ'D

BASIC DRAWING — SEE SHIP DRAWING INDEX FOR VERIFICATION OF APPLICABILITY OF THIS DRAWING TO ANY SHIP

SIZE H | CODE IDENT NO. 43689 | 400 | NAVSHIPS DRAWING NO. 4457274 | REV L

SCALE 6"-1' AS NOTED | SHEET 1 OF 1

N N DWG. NO. H600-2070-47

4457274 / 5

UNCLASSIFIED