DISTRIBUTION LIST

ACTIVITY CODE	KIND	QUANTITY (REVISION → E F)
NAVSEA 9211	D	1 1
COMSUBLANT	D	1 1
COMSUBPAC	D	1 1
NAVSEC 6170D	B	1 1
NAVSEC 6176B	B	— —
STRAWAN PLANT 0726	D	1 1
NAVSEA PMS 400	B	1 1
NAVSHIPS 00	D	2 2
NAVSHIPS 00	B	1 1
NAVSHIPS 00	D	2 2
NAVSEC 06	B	1 1
NAVSHIPS 00	B	1 1
NAVSEC 6663	B	1 1
NAVSHIPS 06	B	— —
NESS NORF CODE 510	D	1 1
SUPSHIPS NPTNWS	D	1 1
SUPSHIPS GROTON	D	1 1
SUPSHIPS PASCAGOULA	D	1 1
NAVSHIPYD PTSMH CODE 202.1	S	1 1
NAVSHIPYD CHARS	D	1 1
NAVSHIPYD NORF	D	1 1
NAVSHIPYD PEARL	D	1 1
NAVSHIPYD PHILA	D	1 1
NAVSHIPYD PTSMH CODE 244.2	S	1 1
NAVSHIPYD PUGET	D	1 1
NAVSHIPYD S.F. BAY N.I.	D	1 1
SHIPYD NPTNWS SHIPALDS	D	1 1
SHIPYD QD/EB GROTON	D	1 1
SHIPYD INGALLS	D	— —
SUBMARINE TENDERS (ONE EACH) (2SETS)	D	12 12
NAVSHIPS REP FACILITY GUAM	D	— —
NAVSHIPS REP FACILITY SUBIC BAY	D	1 1
SUB BASE PEARL	D	1 1
NAVSUBSUPPFAC CODE 768 NLON	D	1 1
NUSL/VIL BA 352	D	1 1
SPCC MECH CODE 0745	D	1 1
TIDEWATER AL CODE 352	D	1 1
7 SILVER HALIDE APERT CARD *	S	3 3
6 DIAZO APERT CARD *	D	5 5
4 VANDIKE/SEPIA	V	— —
1 BLUE PRINT/BLUELINE	B	2 2
5 WHITE BACKGROUND BLACK LINE	W	— —
DATE AUTHORIZED	MM DD YY	03 08 86

* MICROFILM SHALL BE IN ACCORDANCE WITH MIL-M-9868 TYPE I CLASS I FOR SILVER HALIDE AND TYPE I CLASS 2 FOR DIAZO. 35 MM MICRO REPRODUCTION SHALL BE MOUNTED ON STANDARD TABULATING APERTURE CARDS WITH FORMATS AND CODING IN ACCORDANCE WITH THE LATEST ISSUE OF MIL-STD-804.

LIST OF MATERIAL

NO.	NAME	QTY	MAT'L	SPEC	REMARKS AND/OR STOCK NO.	ZONE
1	CRATE ASSY	→	→	→	ONE ASSY C/O PC/ QTY IN APPROPRIATE TABLE	
2	CRATE BASE	1	→	→	C/O PC 3 THRU 24 SEE TABLE FOR QTY/ SIZE	
3	COVER SIDE	1	PINE	NOTE 9	SEE DETAIL	
4	COVER LOWER END	1				
5	COVER UPPER END	1				
6	COVER BOTTOM	1				
7	SUPPORT BRACE	A/R			2 X 4 STOCK CUT TO SUIT	
8	CHOCK, MAST SUPPORT	A/R			SEE DETAIL - TO MATE WITH PC 28	B-34
9	CHOCK HOIST CYL BASE	1			29	B-30
10	CHOCK TUNER HOUSING	1			30	B-26
11	CHOCK HOIST CYL	A/R			31	B-30
12	CHOCK INNER MAST	A/R			32	B-38
13	CHOCK DI POLE	1			33	B-46
14	CHOCK BRD 7	1			34	B-42
15	CHOCK RADOME	1	PINE	NOTE 9	35	B-26
16	CUSHION(FOAM PADDING)	A/R	RBR	MIL-P-15280	1/8 THK NSN5640-00-237-4782	
17	ANCHOR NUT	22	→	→	SEE NOTE 2	
18	SCREW, FHM-1/4-20UNC-2A×2 3/4	22	STEEL	QQ-S-633		
19	BOLT-3/4-10NC-2A × 4 1/4	3			USE WITH AN/BRA 19 (CAST BASE)	
20	WASHER FLAT MED 3/4	6				
21	NUT-3/4-10NC-2B	3	STEEL	QQ-S-633		
22	CHOCK GUIDE	A/R	PINE	NOTE 9		
23	DIVIDER	A/R	PINE	NOTE 9		A-10
24	SHIM	A/R	PINE	NOTE 9		D-10
25						
26	CRATE LID ASSY	→	→	→	ONE ASSY C/O PC/ QTY IND IN APPROPRIATE TABLE	
27	CRATE LID TOP	1	PINE	NOTE 9	C/O PC 27 THRU 35 - SEE TABLE FOR QTY/ SIZE	
28	CHOCK MAST SUPPORT	A/R			SEE DETAIL - TO MATE WITH PC 8	B-28
29	CHOCK HOIST CYL BASE	1			9	B-30
30	CHOCK TUNER HOUSING	1			10	B-26
31	CHOCK HOIST CYL	A/R			11	B-30
32	CHOCK INNER MAST	A/R			12	B-38
33	CHOCK DI POLE	1			13	B-46
34	CHOCK BRD 7	1			14	B-42
35	CHOCK RADOME	1	PINE	NOTE 9	15	B-26

REVISIONS

REV	ZONE	DESCRIPTION	DATE	APPROVED
F		1. REF 3 WAS AN/BRA 34 PRE INSTL PLAN'G DATA AND DWG Nº WAS 4398594. 2 REF 4 DELETED. 3. REF 5 WAS AN/BRD 7 PRE INSTL PLAN'G DATA AND DWG Nº WAS 4398605. 4 ADDED REF 9 & 10 THRU OUT DWG. 5 ADDED TABULATIONS FOR REF 9 & 10 TO TABLE 23A 31A 39A 43A. 6 DWG COMPLETELY REDRAWN 7 OVERALL DIMEN OF 29'-10 3/4" FOR REF 10 ADDED. AUTHORITY 062786 DESIGN TASK.	9-8-86	
E		1. TABLES 31-A, 39-A & 43-B; FOR REF 9, "E" & "H" DIMENSIONS WERE 29 3/4, 8 1/2, AND 11 1/2 RESP. 2. TABLE 31-A; REF 8 WAS BLD-1/BRD-7; REF 9 WAS OE-207/BR; ADDED REF 10. 3. DELETED 3 5/8 X 1 5/8 SLOT IN ALL CHOCKS THRU-OUT DWG. 4. DETAIL B-19, D-19 DELETED "C" DIM. 5. TABLE 23-A; ADDED 2 3/8 TO ALL "C" DIMENSIONS. AUTHORITY C12566 DESIGN TASK.	06/15/88	

NOTES:

1. ALL MATERIAL THICKNESS DIMENSIONS ARE ACTUAL FINISHED SIZES.
2. PC.Nº 17 – TO BE SAME AS OR EQUAL TO THOSE MANUFACTURED BY SOUTHCO INC., CONCORDVILLE, PA 19331 - PT.Nº 21-40910-16.
3. ALL FASTENERS OTHER THAN SHOWN TO BE LEFT TO DISCRETION OF SHOP. SHOP TO TAKE PRECAUTIONS IN CONSTRUCTION, DUE TO FREQUENT SHIPPING AND PRIMARY FUNCTION OF CRATE.
4. DUE TO LENGTH OF CRATE PCS. MAY BE BUTTED (TONGUE AND GROOVE METHOD ACCEPTABLE) TO DISCRETION OF SHOP.
5. PCS. Nº 1 AND 26 TO BE PAINTED IN ACCORDANCE WITH CHAPTER 19 OF BU SHIPS MANUAL. AS FOLLOWS: 2 COATS OF F116 1 COAT OF F5H HAZE GRAY.
6. ALL STENCILING TO BE ACCOMPLISHED BY MANUFACTURER PAINT TO BE BLACK AND (OR) WHITE KRYLON SPRAY. FOR STENCILING INFORMATION SEE DETAIL-A-15
7. FOR DESIGN OF PUNCH OR TORQUE EXPANDER REFER TO SOUTHCO INC., PT Nº 21-40912-11 OR 21-40914-11.
8. MARINE PLYWOOD MAY BE SUBSTITUTED FOR PINE WOOD.
9. ITEMS 3 THROUGH 15, 22 THRU 24, 27 THRU 35, ARE TO BE LEFT TO DISCRETION OF SHOP.
10. WHERE THIS NOTE IS REFERENCED GLUE ITEM 16 TO ALL BEARING SURFACES

REFERENCES

NO.	TITLE	NAVSHIPS DRAWING NO.
10	OE-207/BR INSTL STD TOP DWG.	SSBN-726-445-449199
9	BLD-1/BRD-7 MAST ASSY	SS-472-5361666
8	AN/BQR-19 SNR SUB INSTL (ITERIM)	
7	AN/BRA-34 (XN-1) ARR IN SHIP	SS(N)578-445-4398623
6	AN/BRA-9 PRE INSTL PLANG DATA	SS-404-2477189
5	AN/BRD-7 INSTL STD TOP DWG	SS-445-4398606
~~4~~	~~AN/BRD-7 PRE INSTL PLANG DATA~~	~~SS-445-4398606A~~
3	AN/BRA-34 INSTL STD TOP DWG	SS-445-4398595
2	AN/BQR-19 SNR SUB INSTL STD	SS-412-1971437
1	AN/BRA-19 TEL WHIP ANT ARRANG	SS-522-2113416

MICROFILM RECORD STAMP HERE

TOTAL			
ASSY	LB #7	✓ CALCULATED / ACTUAL	CENTER OF GRAVITY (CALCULATED / ACTUAL

DIMENSIONAL TOLERANCES & SURFACE FINISH — UNLESS OTHERWISE SPECIFIED

DECIMALS		FRACTIONS		WELDMENTS		CASTINGS	
PLACES	± TOL	DIMENSION	± TOL	DIMENSION	± TOL	DIMENSION	TOLERANCE
XXX	.005	< 6"	1/64	< 24"	.062	< 2"	+1/16 −1/16
.XX	.02	6" TO 24"	1/32	≧ 24"	.126	2" TO 5"	+3/32 −1/16
X	.1	≧ 24"	1/16	ALL PLASTICS		5" TO 8"	+1/8 −3/32
WHOLE NUMBERS ARE TOL ± .1				CONDITION	± TOL	8" TO 12"	+3/16 −1/8
				MACHINED	.010	12" TO 15"	+1/4 −3/16
				MOLDED	.035	≧ 15"	+1/4 −1/4

(√) MACHINED SURFACE FINISHES 125 MUNIMAX IAW ASA B46.1 EXCEPT AS NOTED. ALL ANGLES ±0°30'. MATERIAL SPECIFICATION TOLERANCES APPLY TO STOCK SIZES. THREAD DIMENSIONS AND DESIGNATIONS TO BE IN ACCORDANCE WITH NATIONAL BUREAU OF STANDARDS HANDBOOK H-28 AND MIL-STD-9, RESPECTIVELY. BREAK ALL SHARP EDGES .01 TO .02.

OFFICIAL	SIGNATURE	DATE
DEPT HEAD		
BRANCH HEAD		
SECTION HEAD		
PROJECT ENGR		
REVIEWED		
DRAWN		
APPROVED		
DIRECTOR SUBMARINE ANT. E.D.		
NAVSHIPS APPROVAL		

NAVAL SHIP ENGINEERING CENTER
PHILADELPHIA DIVISION (SAED)
NAVAL BASE, PHILADELPHIA, PENNA., 19112

REUSABLE SHIPPING CRATE FOR ANTENNA MAST ASSEMBLIES

REUSABLE SHIPNG CTS ANT MAST

SIZE	CODE IDENT	NAVSHIPS DRAWING NUMBER	REV
D	25685	SS 904 2113425	F

SCALE: NOT TO BE SCALED — SHEET OF

DWG NO. 2113425

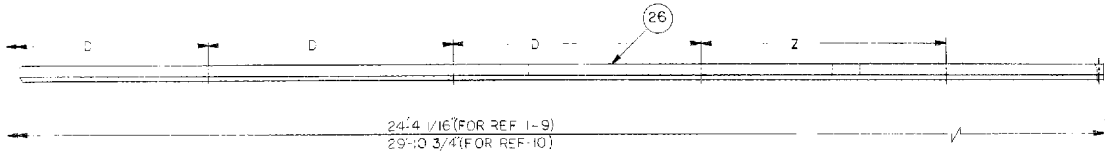

D-14

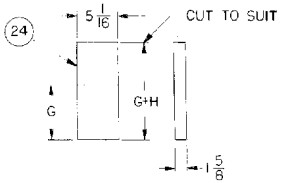

D-10

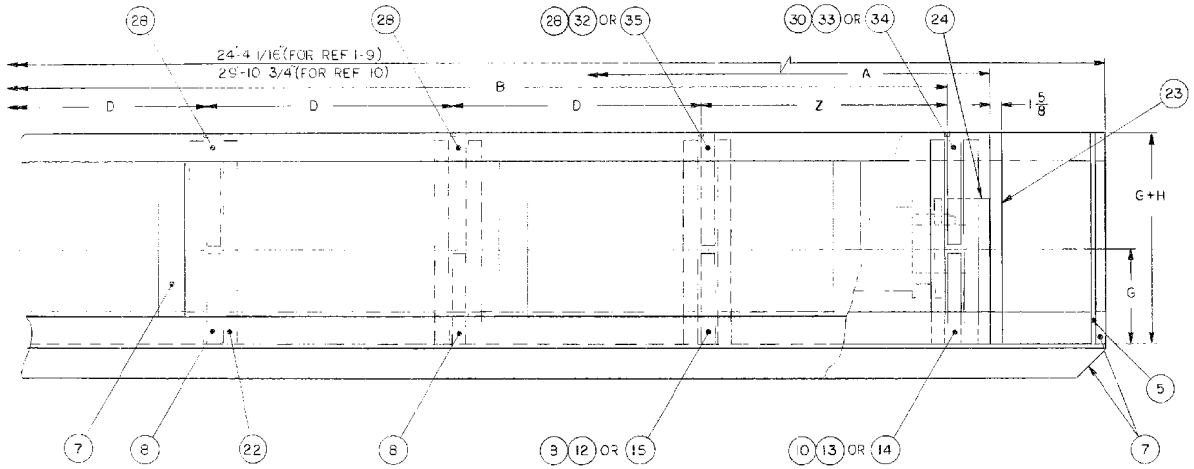

B-14

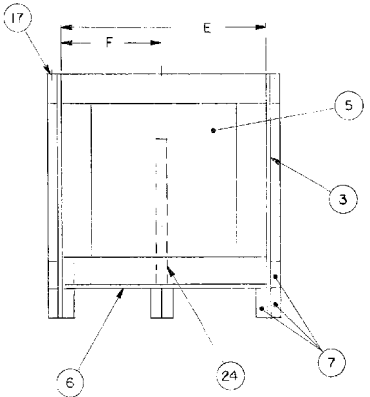

B-10

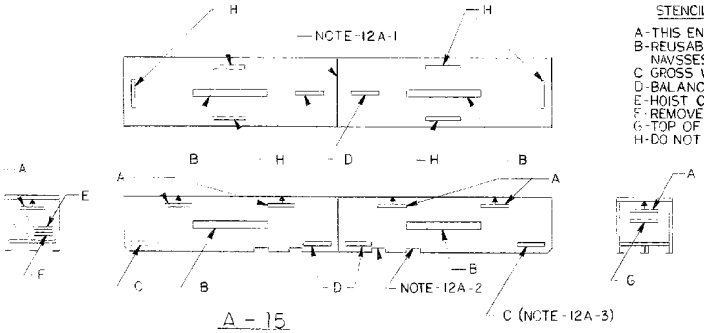

A-15

STENCILING ARRANGEMENT LEGEND

A-THIS END UP
B-REUSABLE CONTAINER DO NOT DESTROY RETURN TO NAVSSES PHILA NAVY SHIPYARD (CODE 06)
C GROSS WEIGHT _ _ _ _ _ _ _
D-BALANCE LINE
E-HOIST CYLINDER END
F-REMOVE FASTENERS
G-TOP OF MAST
H-DO NOT PRY OPEN

NOTES:

12A-1. BALANCE LINE TO BE PAINTED IN ONE CONTINUOUS LINE ON 2 SIDES & TOP. THE LOCATION OF THIS LINE TO BE DETERMINED UPON INSERTION OF APPLICABLE ANTENNA

12A-2. NOTCHING FOR FORK LIFT AND LIFTING CABLE ACCESS TO BE EQUALLY SPACED EACH SIDE OF BALANCE LINE. DETAILS OF SAME TO BE LEFT TO THE DISCRETION OF SHOP.

12A 3. MUST BE DETERMINED AT ASS'Y WITH ANT.

12A-4. PC 23 TO BE USED WITH ALL SYSTEMS.

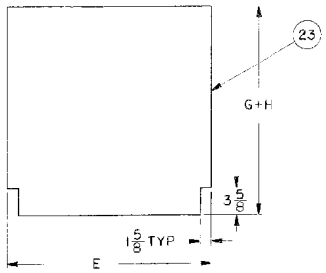

A-10

DRAWN	SIZE	CODE IDENT	SWBS	NAVSEA DRAWING NUMBER	REV.
REVIEWED	D	53711	904	2113425	F
	SCALE NONE			SHEET 2 OF 6	

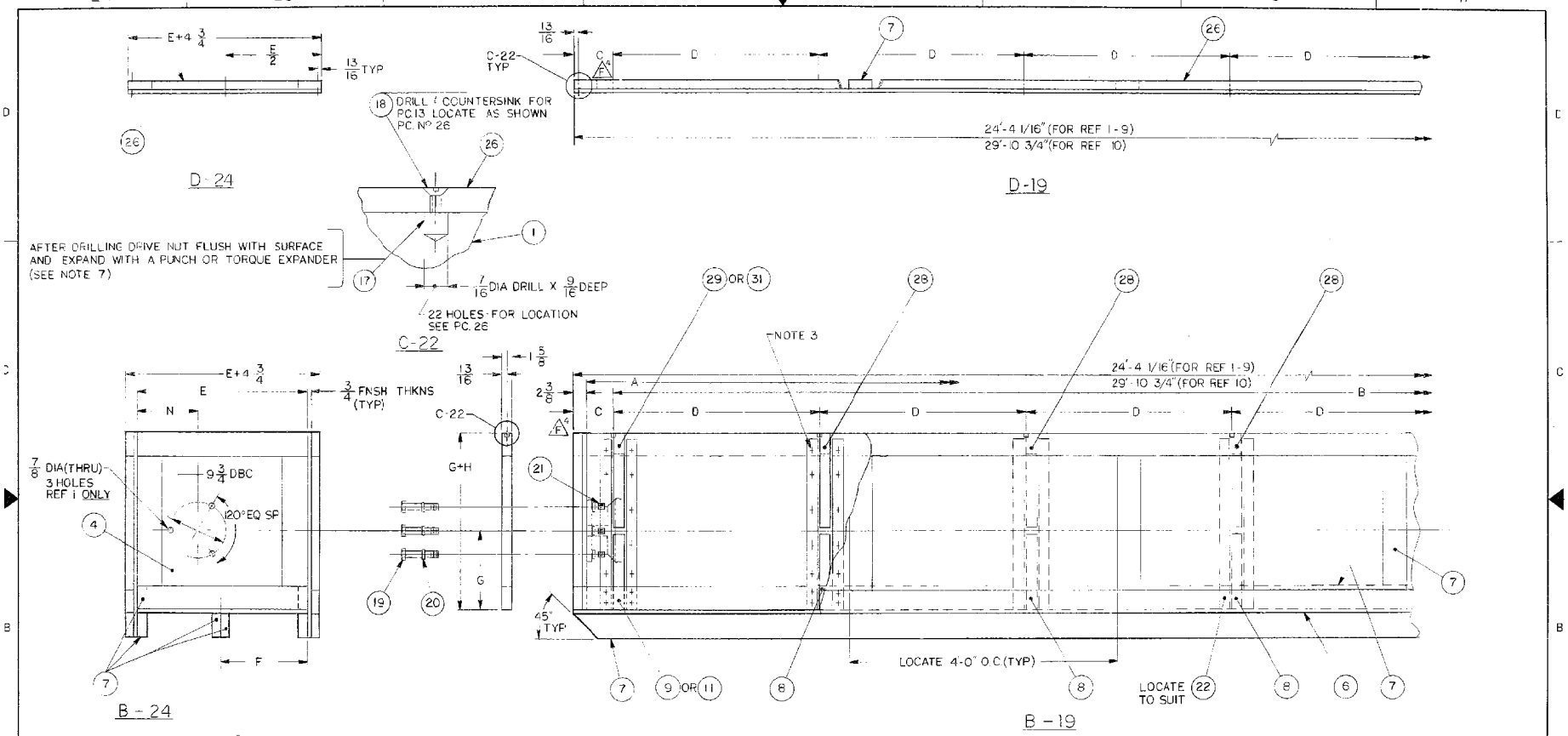

TABLE - 23A

REF.	SYSTEM	A	B	C	D	Z
1	AN/BRA-19	21 - 7 3/4	20 - 7 7/8	7 7/8	35 3/8	35 3/8
2	AN/BQR-19	19-6 13/16	18-8 15/16	7 7/8	35 3/8	———
3	AN/BRA-34	16 - 2 5/8	15-8 1/8	7 5/8	35 3/8	———
4	DIPOLE/BRD-7	16 - 0	12-9 3/16	7 11/16	35 3/8	18 - 15/16
5	AN/BRD-7	15 - 6 3/16	12-9 3/16	7 11/16	35 3/8	15
6	AN/BRA-9	12 - 6 1/16	18-1 5/8	10 11/16	35 3/8	———
7	AN/BRA34(XN-1)	21-9 9/16	21 - 4 1/16	7 7/8	35 3/8	———
8	INTERIM/BQS-19	20-6 1/8	20-0 5/8	7 7/8	35 3/8	28 3/8
9	BLC-1/BRD-7	15 - 8 13/16	14 - 11 3/8	7 11/16	36	35 3/8
10	CE-207/BR	29 - 4 3/8	23-10 3/8	7 3/8 - 8 3/8	36	———

DRAWN	SIZE	CODE IDENT	S/WBS	NAVSEA DRAWING NUMBER	REV
REVIEWED	D	53711	1904	2113425	F
	SCALE NONE			SHEET 5 OF 9	

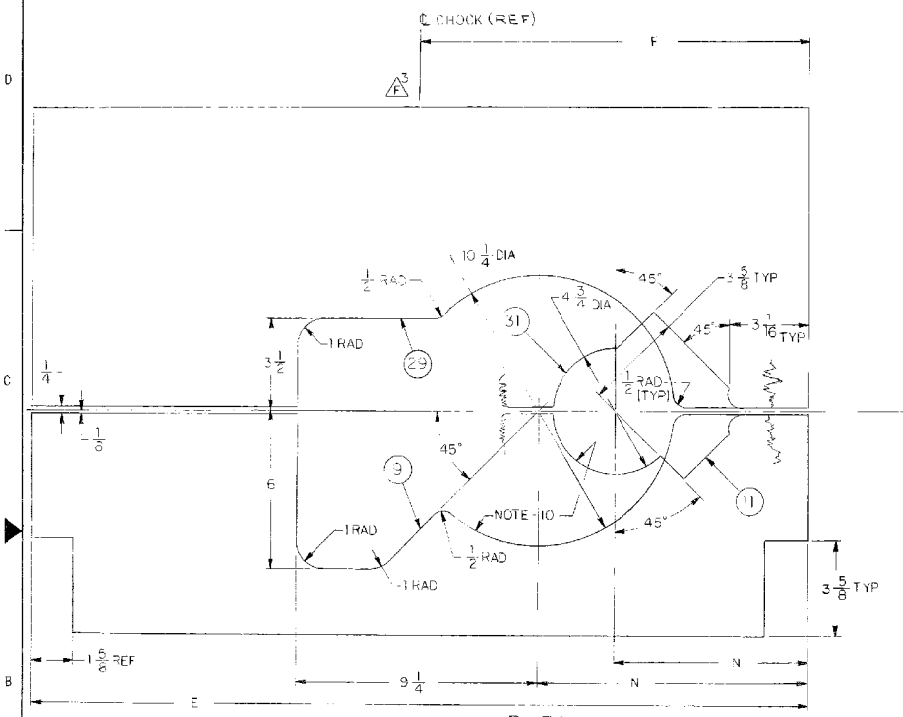

B-30

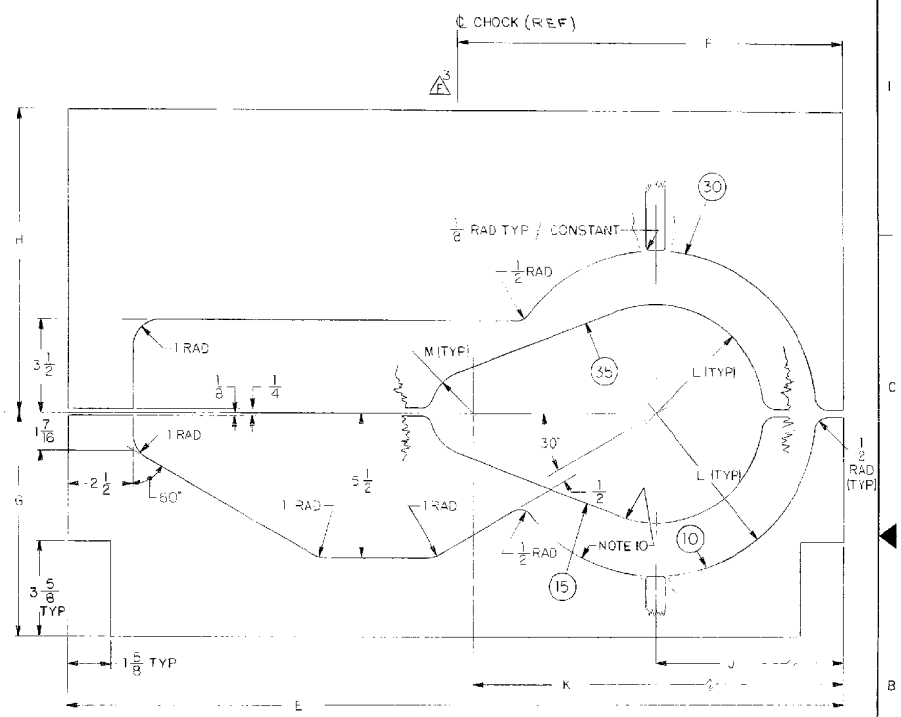

B-26

TABLE 31A

REF	SYSTEM S	DIMENSIONS E	F	G	H	N	QTY OF PC NO. PER SYS 9	11	29	31
1	AN/BRA-19	29 3/4	14 7/8	8 1/2	11 1/2	10 1/4	1	—	1	—
2	AN/BQR-19	29 3/4	14 7/8	8 1/2	11 1/2	7 5/16	—	1	—	1
3	AN/BRA-34	29 3/4	14 7/8	8 1/2	11 1/2	7 5/16	—	1	—	1
4	DIPOLE/BRD-7	32 5/16	165/32	15 3/16	15 13/16	7 5/16	—	1	—	1
5	AN/BRD-7	29 3/4	14 7/8	10 1/4	13 1/8	7 5/16	—	1	—	1
6	AN/BRA-9	29 3/4	14 7/8	8 1/2	11 1/2	7 5/16	—	1	—	1
7	BRA-34(XN-1)	29 3/4	14 7/8	8 1/2	11 1/2	7 5/16	1	—	1	—
8	INT-RIM/BQR-19	29 3/4	14 7/8	8 1/2	11 1/2	7 5/16	—	2	—	2
9	BLD 1/BRD 7	32	16	17 1/2	15 1/2	7 5/16	—	2	—	2
10	CE-207/BR	29 3/4	14 7/8	8 1/2	11 1/2	7 5/16	—	2	—	2

TABLE - 27A

REF	SYSTEM(S)	DIMENSIONS E	F	G	H	J	K	L	M	QTY OF PC NO. PER SYS 10	15	30	35
1	AN/BRA-19	29 3/4	14 7/8	8 1/2	11 1/2	7 1/4	—	6 3/16	—	1	—	1	—
3	AN/BRA-34	29 3/4	14 7/8	8 1/2	11 1/2	16 1/2	23 1/2	4 1/8	1 5/8	—	1	—	1

DRAWN	SIZE	CODE IDENT	SWBS	NAVSEA DRAWING NUMBER	REV
REVIEWED	D	53711	904	2113425	F
	SCALE NONE			SHEET 4 OF 6	

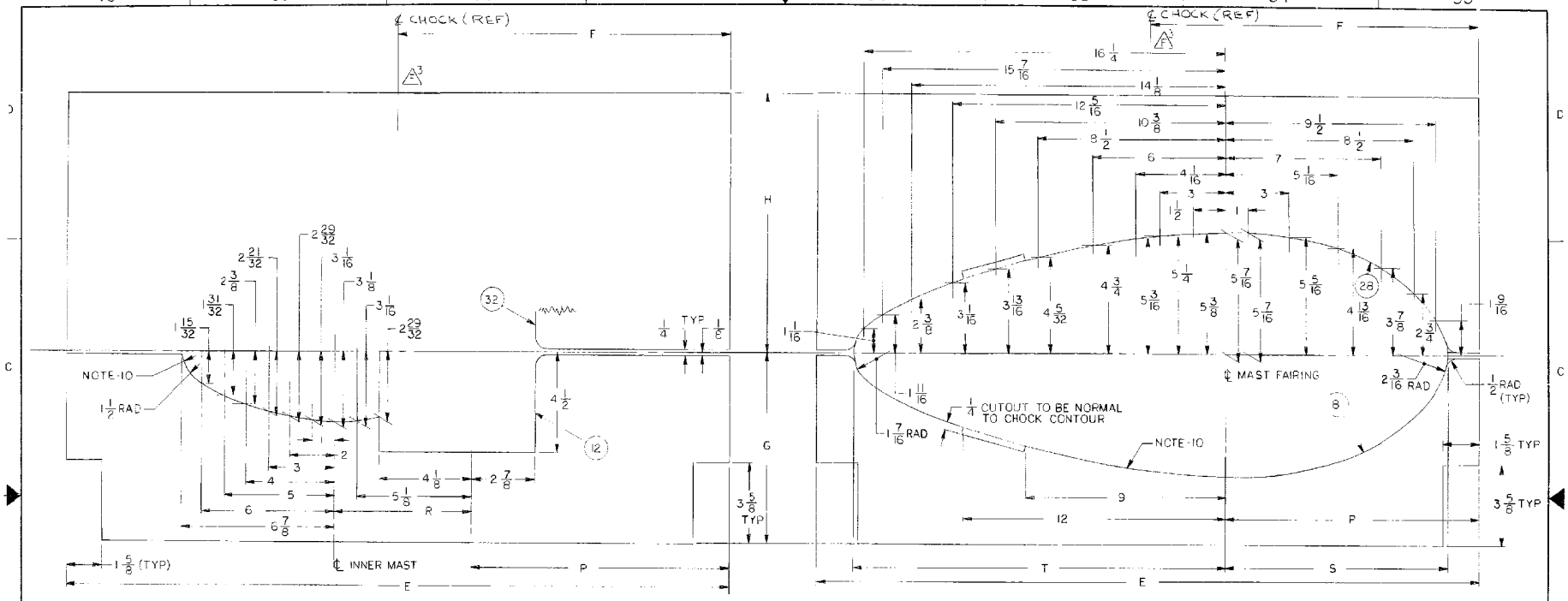

TABLE - 39A

REF	SYSTEM(S)	DIMENSIONS E	F	G	H	P	R	S	T	QTY OF PC 8	2	NO. PER SYS 23	32
1	AN/BRA-19	29 3/4	14 7/8	8-1/2	11-1/2	11-1/2	—	10-3/32	16-23/32	6	—	6	—
2	AN/BQR-19	29 3/4	14-7/8	8-1/2	11 1/2	11-1/2	6-1/8	10-3/32	16-23/32	5	1	5	1
3	AN/BRA-34	29 3/4	14 7/8	8 1/2	11-1/2	11-1/2	—	10 3/32	16-23/32	4	1	4	1
4	DIPOLE/BRD 7	32 5/16	16-5/32	15-13/16	15 13/16	11 1/2	6-1/8	10-3/32	16 23/32	4	1	4	1
5	AN/BRD-7	29-3/4	14-7/8	10 1/4	13-1/8	11-1/2	6 1/8	10-3/32	16 23/32	4	1	4	1
6	AN/BRA-9	29 3/4	14 7/8	8 1/2	11 1/2	11-1/2	—	10-3/32	16 23/32	6	—	6	—
7	BFA-34 (XNI)	29-3/4	14-7/8	8 1/2	11-1/2	11 /2	—	10-3/32	16 23/32	7	—	7	—
8	INTERM/BQR-19	29-3/4	14 7/8	8-1/2	11-1/2	11 1/2	6 1/8	10-3/32	16 23/32	6	1	6	1
9	BLD-1/BRD-7	32	16	17 1/2	15-1/2	11 /2	6-1/8	10-3/32	16-23/32	4	—	4	—
10	OE-207/BR	29-3/4	14-7/8	8-1/2	11-1/2	11- /2	—	10-3/32	16-23/32	8	—	8	—

DRAWN	SIZE	CODE IDENT	SWBS	NAVSEA DRAWING NUMBER	REV
REVIEWED	D	53711	904	2113425	F
	SCALE NONE			SHEET 5 OF 6	

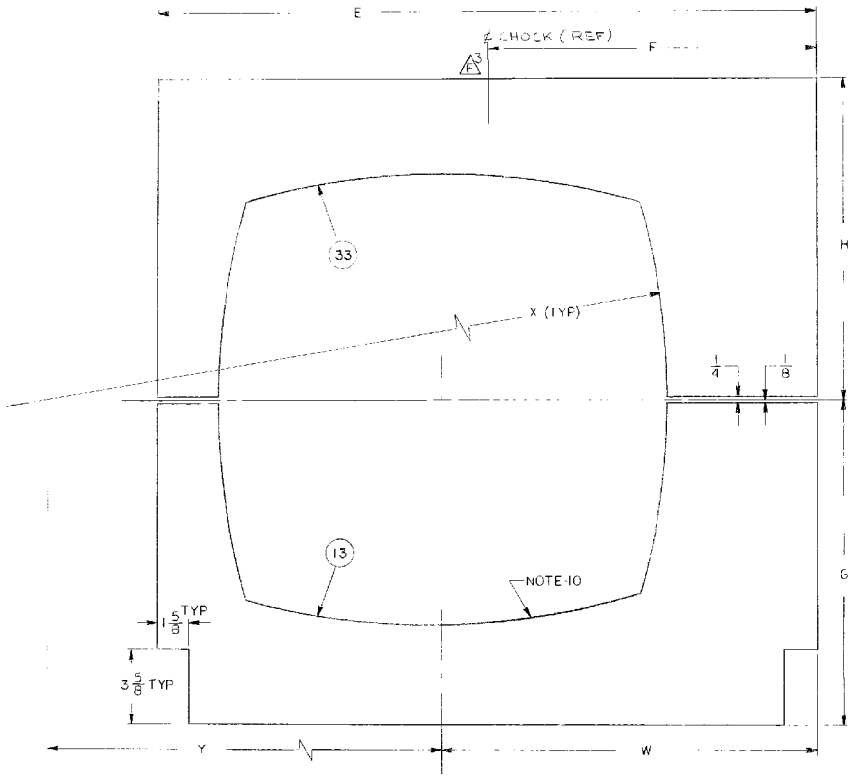

B-46

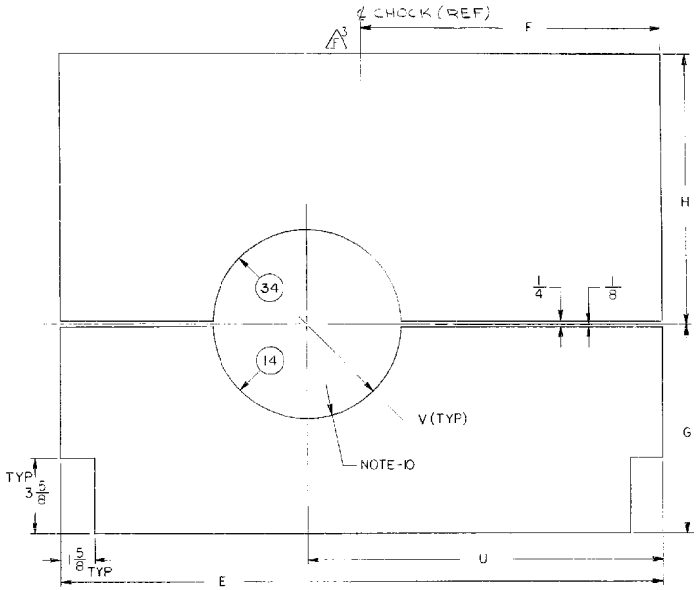

B-42

TABLE-43 B											
REF	SYSTEM (S)	DIMENSIONS						QTY OF PC NO PER SYS			
		E	F	G	H	U	V	14	34		
5	AN / BRD-7	29 3/4	14-7/8	10-1/4	13-1/8	17 5/8	9-1/4	1	1		
A4 9	BLD-1/BRD-7	32	16	17 1/2	15 1/2	17-5/8	9-1/4	1	1		

TABLE 47A												
REF	SYSTEM (S)	DIMENSIONS							QTY OF PC NO PER SYS			
		E	F	G	H	W	X	Y	13	33		
4	DIPOLE/BRD7	32 5/16	16 5/32	15 13/16	5 13/16	19 3/8	35-1/2	23-29/32	1	1		

DRAWN	SIZE	CODE IDENT	SWBS	NAVSEA DRAWING NUMBER	REV
REVIEWED	D	53711	904	2113425	F
	SCALE NONE			SHEET 6 OF 6	