## DISTRIBUTION LIST

| ACTIVITY CODE | KIND | C | D | E | F | G | H |
|---|---|---|---|---|---|---|---|
| REVISION → | | C | D | E | F | G | H |
| NAVSEA PMS 921 | D | 1 | 1 | 1 | 1 | 1 | 1 |
| COMSUBLANT | D | 1 | 1 | 1 | 1 | 1 | 1 |
| COMSUBPAC | D | 1 | 1 | 1 | 1 | 1 | 1 |
| NAVSEC 6171B-06 | B | 1 | 1 | 1 | 1 | 1 | — |
| NAVSEC 6176B | B | 1 | — | — | — | — | — |
| NAVSEC PORT HUENEME | D | 1 | 1 | — | — | — | — |
| NESEC NORF CODE 510 | D | 1 | 1 | — | — | — | 1 |
| TRIREFITFAC CODE 324 | D | 1 | 1 | — | — | — | — |
| NAVSSES 0022D | D | 14 | 14 | 23 | 23 | 23 | 20 |
| NAVSSES 06022 | S | 1/1 | 1/2 | 1/2 | 1/2 | 1/2 | 1 |
| NAVSSES 06022 | D | — | 2 | — | — | — | 2 |
| NAVSSES 061 | B | 1/- | 1/4 | 1/0 | 1/0 | 1/0 | 1 |
| NAVSSES 06014, 06013 | B | 1/- | 1/7 | 1/0 | 1/0 | 1/0 | 2 |
| NAVSSES 0623 | B | 1/- | 1/4 | 1/0 | 1/0 | 1/0 | 1 |
| NAVSSES 063 | B | 2/- | 2/4 | 2/0 | 2/0 | 2/0 | 2 |
| NAVSEC 6179B.06 | B | — | 1 | — | — | — | — |
| NESEC NORF CODE 401 | D | — | — | 1 | 1 | 1 | — |
| NAVSHIPYD PTSMH CODE 202.1 | S | — | — | 1 | 1 | 1 | 1 |
| SUPSHIPS NPTNWS | D | 1 | 1 | 1 | 1 | 1 | 1 |
| SUPSHIPS GROTON | D | 1 | 1 | 1 | 1 | 1 | 1 |
| SUPSHIPS PASCAGOULA | D | 1 | 1 | 1 | 1 | 1 | 1 |
| NAVSEC S DIEGO DIV | D | — | — | — | — | — | — |
| NAVSHIPYD CHARS | D | 1 | 1 | 1 | 1 | 1 | 1 |
| NAVSHIPYD NORF | D | 1 | 1 | 1 | 1 | 1 | 1 |
| NAVSHIPYD PEARL | D | 1 | 1 | 1 | 1 | 1 | 1 |
| NAVSHIPYD PHILA | D | 1 | 1 | 1 | 1 | 1 | 1 |
| NAVSHIPYD PTSMH CODE 244.2 | S | 1 | 1 | 1 | 1 | 1 | 1 |
| NAVSHIPYD PUGET | D | 1 | 1 | 1 | 1 | 1 | 1 |
| NAVSHIPYD S.F. BAY H.P. | D | 1 | 1 | — | — | — | — |
| NAVSHIPYD S.F. BAY M.I. | D | 1 | 1 | 1 | 1 | 1 | 1 |
| SHIPYD NPTNWS SHIPBLDG | D | 1 | 1 | 1 | 1 | 1 | 1 |
| SHIPYD GD/EB GROTON | D | 1 | 1 | 1 | 1 | 1 | 1 |
| SHIPYD INGALLS | D | 1 | 1 | 1 | 1 | 1 | — |
| SUBMARINE TENDERS (ONE EACH=12SETS) | D | 12 | 12 | 11 | 11 | 11 | 12 |
| NAVSHIPS REP FACILITY GUAM | D | 1 | 1 | 1 | 1 | 1 | 1 |
| NAVELEX PME-110-322 | D | — | — | — | — | — | — |
| NAVSHIPS REP FACILITY SUBIC BAY | D | 1 | 1 | 1 | 1 | 1 | 1 |
| NAVSHIPS REP FACILITY SASEBO | D | 1 | 1 | — | — | — | — |
| SUB BASE PEARL | D | 1 | 1 | 1 | 1 | 1 | 1 |
| NAVSUBSUPPAC CODE 768 NEW LONDON | D | 1 | 1 | 1 | 1 | 1 | 1 |
| NUSL/NL S342 | D | 1 | 1 | 1 | 1 | 1 | 1 |
| SPCC MECH CODE 0543 | D | — | — | — | — | — | 1 |
| NAVSEA PMS 383 | D | — | — | — | 1 | 1 | 1 |
| SPCC MECH CODE 883C1 | D | — | — | — | — | 2 | — |
| TOTALS: SILVER HALIDE APERT CARD * | S | 2 | 2 | 3 | 3 | 3 | 3 |
| TOTALS: DIAZO APERT CARD * | D | 52 | 53 | 57 | 58 | 61 | 57 |
| TOTALS: VANDIKE/SEPIA | V | — | — | — | — | — | — |
| TOTALS: BLUE PRINT/BLUELINE | B | 7 | 7 | 6 | 6 | 6 | 6 |
| TOTALS: BLACK ON WHITE, REDUCED SIZE 25% | W | — | 38 | — | — | — | — |
| DATE AUTHORIZED MM | | 09 | 02 | 09 | 05 | 04 | 09 |
| DATE AUTHORIZED DD | | 29 | 13 | 14 | 23 | 24 | 28 |
| DATE AUTHORIZED YY | | 72 | 73 | 76 | 77 | 79 | 84 |

* MICROFILM SHALL BE IN ACCORDANCE WITH MIL-M-9868 TYPE I CLASS I FOR SILVER HALIDE AND TYPE II CLASS 2 FOR DIAZO. 35 MM MICRO REPRODUCTION SHALL BE MOUNTED ON STANDARD TABULATING APERTURE CARDS WITH FORMATS AND CODING IN ACCORDANCE WITH THE LATEST ISSUE OF MIL-STD-804.

MICROFILM RECORD STAMP HERE

THIS PLAN HAS BEEN MICRO-FILMED AT PHILADELPHIA NAVAL SHIPYARD AND APERTURE CARD PREPARED FOR FILE

-4491146-

| | |
|---|---|
| TOTAL | 26 |
| ASSY | LB WT CALC |

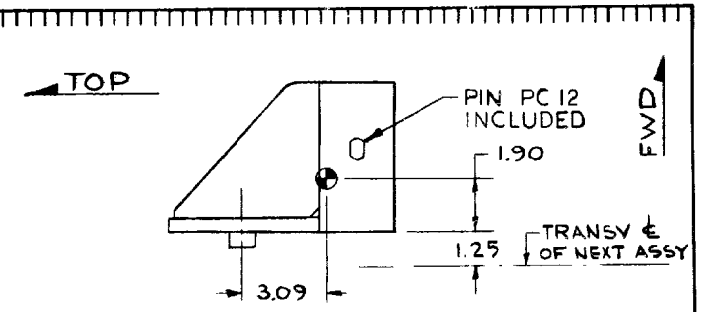


### DIMENSIONAL TOLERANCES UNLESS OTHERWISE SPECIFIED

| MACHINED | | | WELDMENTS | | CASTINGS | |
|---|---|---|---|---|---|---|
| DIMENSION | DECIMALS | FRACTIONS | DIMENSION | TOLERANCE | DIMENSION | TOLERANCE |
| UNDER 6" | ± .005 | ± 1/64 | UNDER 24" | ± 1/16 | UNDER 2" | +1/16 −1/16 |
| 6" TO 24" | ± .010 | ± 1/32 | 24" & OVER | ± 1/8 | 2" TO 5" | +3/32 −1/16 |
| 24 & OVER | ± .015 | ± 1/16 | | | 5" TO 8" | +1/8 −3/32 |
| | | | | | 8" TO 12" | +3/16 −1/8 |
| | | | | | 12" TO 15" | +1/4 −3/16 |
| ANGULAR ± 0°30' | | | ANGULAR | ± 0°30' | 15 & OVER | +1/4 −1/4 |

MACHINED (√) SURFACE FINISHES = 125 MUIN (AA) IAW B46.1, EXCEPT AS NOTED.
BREAK ALL SHARP EDGES .01 TO .02, EXCEPT AS NOTED.
THREAD DIMENSIONS AND DESIGNATIONS TO BE IN ACCORDANCE WITH NATIONAL BUREAU OF STANDARDS HANDBOOK H-28 AND MIL-STD-9, RESPECTIVELY.

| STD COMPONENT DWG | | |
|---|---|---|
| OFFICIAL | SIGNATURE | DATE |
| DEPT HEAD | [signature] | 12/4/70 |
| BRANCH HEAD | [signature] | 12-4-70 |
| SECTION HEAD | [signature] | 12-3-70 |
| PROJECT ENGR | [signature] | 12-3-70 |
| REVIEWED | T.E.S. | |
| DRAWN | NDI/SEF | |
| APPROVED | [signature] | DATE 12/4/70 |
| DIRECTOR SUBMARINE ANT. Q.A. | | |

MAST FAIRING

NEXT ASSY APPLICATION

NAVAL SHIP ENGINEERING CENTER
PHILADELPHIA DIVISION (SAQAD)
NAVAL BASE, PHILADELPHIA, PENNA., 19112

# HOIST CYLINDER MOUNTING BRACKET

HST CYL MOUNTING BRACKET

| SIZE | CODE IDENT | NAVSHIPS DRAWING NUMBER | | | REV |
|---|---|---|---|---|---|
| B | 25685 | SS | 522 | 4491146 | H |

SCALE: NOT TO BE SCALED — SHEET 1 OF 6

| INDEX | | |
|---|---|---|
| SHT. NO. | TITLE | REV. |
| 1 | COVER SHEET | H |
| 2 | INDEX AND GENERAL NOTES | H |
| 3 | PARTS AND MATERIAL LIST | H |
| 4 | MOUNTING BRACKET | H |
| 5 | LOCATING & CONNECTING PINS | H |
| 6 | REVISION LIST | H |

1. THIS DRAWING IS DEVELOPED TO STANDARDIZE THIS COMPONENT FOR COMPLETE TWO-WAY INTERCHANGEABILITY BETWEEN SELECTED ANTENNA MAST SYSTEMS.
2. (G1) MATERIAL IDENTIFICATION AND CONTROL REQUIREMENTS: THE IDENTITY OF MATERIALS SHALL BE VERIFIED BY VISUAL (NON-METALLIC) OR ACID AND HARDNESS TESTS (WHERE MATERIAL SPECIFICATION SHOWS HARDNESS VALUES). AFTER VERIFICATION, ALL FASTENERS SHALL BE COLOR CODED BY SOME DISTINCTIVE COLOR (NOT IN CONFLICT WITH NAVSHIPS 0948-045-7010) FOR EASE OF RECOGNITION.
3. SUBSTITUTION OF MATERIAL IS NOT PERMISSIBLE WITHOUT FORMAL WRITTEN AUTHORITY BY THE DESIGN ACTIVITY GENERATING THIS DRAWING. SUBSTITUTION SO AUTHORIZED SHALL BE SO INDICATED, ON ALL SUBSEQUENTLY APPLICABLE DOCUMENTS WITH THE AUTHORIZATION REFERENCED.
4. MARKING AND IDENTIFICATION SHALL BE IN ACCORDANCE WITH MIL-STD-130.
5. (F2) (G2) ID NO (IDENTIFICATION NUMBER): WHERE THIS NOTE IS REFERENCED: THE ID NO SHALL BE PERMANENTLY INSCRIBED IN THE AREA INDICATED BY THE RECTANGLE ON THE DETAIL. A BROKEN RECTANGLE INDICATES FAR SIDE. AN ARROW INDICATES LEFT TO RIGHT READING. ARROW WITH CIRCLE O——► INDICATES ITEM IS NOT SERIALIZED. OTHERWISE, THE ID NO SHALL CONSIST OF FOUR PARTS SEPARATED BY A DASH AS IN THE FOLLOWING EXAMPLE: ■■-4491146-■-□. PART ONE, "■■" IS THE SERIAL NO AND IS ASSIGNED ONLY BY SAED CONFIGURATION MANAGEMENT. PART TWO, "4491146" IS THE LAST SEVEN DIGITS OF THE DRAWING NO. PART 3 AND 4 (REVISION LETTER "■" AND ITEM NUMBER "□") ARE AS GIVEN IN THE RECTANGLE ON THE DETAIL.
6. ALL PHASES OF WELDING SHALL BE AS REQUIRED BY MIL-STD-278. THE FOLLOWING SPECIFICATIONS ARE INVOKED: (A) MIL-STD-248 - QUALIFICATION TEST FOR WELDERS. (B) MIL-STD-271 - NON-DESTRUCTIVE TESTING OF WELDS. (C) NAVSHIPS 0900-003-8000 - SURFACE INSPECTION ACCEPTANCE STANDARDS FOR METALS. (D) NAVSHIPS 0900-003-9000 - RADIOGRAPHIC STANDARDS FOR PRODUCTION AND REPAIR OF WELDS. (E) NAVSHIPS 0900-006-9010 - FABRICATION, WELDING AND INSPECTION OF HY-80 SUBMARINE HULLS.
7. THE APPLICABLE REVISION TO SPECIFICATIONS CITED HEREIN SHALL BE CONSIDERED THAT IN EFFECT ON ANY GIVEN DATE OF THIS DRAWING APPLICATION, UNLESS OTHERWISE SPECIFIED.
8. ALL DIMENSIONS ARE IN INCHES UNLESS OTHERWISE SPECIFIED.
9. A-5 / B-4 { ALL DETAILS, SECTIONS, TABLES, ETC. ARE IDENTIFIED BY LABELS SUCH AS A-5 (DET A ON SHEET 5). SUB LABELS REFER TO RELATED VIEWS, TABLES, ETC. SUCH AS B-4 (VIEW B ON SHEET 4).
10. ALL FEATURES ARE SYMMETRICAL ABOUT CENTERLINES UNLESS OTHERWISE INDICATED.
11. (G2) CODE IDENT: WHERE THIS NOTE IS REFERENCED, THE DESIGN CODE IDENTIFICATION "CIN 25685" SHALL BE PERMANENTLY INSCRIBED IN THE AREA INDICATED ON THE DETAIL.

| | | | | | |
|---|---|---|---|---|---|
| INDEX AND GENERAL NOTES | DRAWN SEF | SIZE | CODE IDENT | NAVSHIPS DRAWING NO. | |
| | REVIEWED T.E.S. | B | 25685 | SS 522 | 4491146 |
| | | SCALE: | | SH REV A B C D F G H | SH 2 |

| PIECE NO. 3 2 1 0 | NAME | QTY | MATERIAL | SPEC | REMARKS AND/OR STOCK NO. | ✳ | NOTE 2 | ON SHT | PIECE NO. |
|---|---|---|---|---|---|---|---|---|---|
| 1 | COMPONENT; HST CYL MTG BRKT ASSY NO. 1 | 1 | → | → | C/O PCS 3,9,12,13,16,17 & 18 | P | | 4 | 1 |
| 2 | COMPONENT; HST CYL MTG BRKT ASSY NO. 2 | 1 | → | → | C/O PCS 10, 12, 13, 20, 22, 23 & 24 | P | | 4 | 2 |
| 3 | BRACKET; MOUNTING | 1 | → | → | C/O PCS 4 THRU 6 | P | | 4 | 3 |
| 4 | BASE PLATE 2 5/8 PL | 1 | CRES | QQ-S-766 | CL 316L, COND A | P | | 4 | 4 |
| 5 | BACK PLATE 5/8 PL | 1 | CRES | QQ-S-766 | CL 316L, COND A | P | | 4 | 5 |
| 6 | STIFFENER 1/2 PL | 1 | CRES | QQ-S-766 | CL 316L, COND A | P | | 4 | 6 |
| 7 | | | | | | | | | 7 |
| 8 | | | | | | | | | 8 |
| 9 | PIN; LOCATING 1 3/4 RB | 1 | CRES | QQ-S-763 | CL 304, COND A, U/W PIECE NO. 3 U/W PIECE NO. 3 | P | | 5 | 9 |
| 10 | PIN; LOCATING 1 3/4 RB | 1 | NI-CU-AL | QQ-N-286 | CL A, FORM 2, CONDTN: ANNEALED & AGE HARDENED. U/W PIECE NO. 20 | P | | 5 | 10 |
| 11 | | | | | | | | | 11 |
| 12 | PIN; CONNECTING 1 1/4 RB | 1 | NI-CU-AL | QQ-N-286 | CL A, CD | P | | 5 | 12 |
| 13 | NUT; ELAS STOP, 3/4-10UNC-3B | 1 | NI-CU | QQ-N-281 | CL B, MS17828-12C | P | | – | 13 |
| 14 | | | | | | | | | 14 |
| 15 | | | | | | | | | 15 |
| 16 | BOLT HEX HD - 1/2-20UNF-3A x 2 LG | 4 | NI-CU | QQ-N-281 | CL A, CD, FF-S-85 TYPE 2 STYLE 10 P | P | | 4 | 16 |
| 17 | NUT, ELASTIC STOP - 1/2-20UNF-3B | 4 | NI-CU | QQ-N-281 | CL A, CD, MS17828-8F | P | | - | 17 |
| 18 | WASHER - 1 1/4 O.D. x 17/32 I.D. x3/16 THK | 4 | NI-CU | QQ-N-281 | CL A | P | | - | 18 |
| 19 | | | | | | | | | 19 |
| 20 | BRACKET; MOUNTING | 1 | → | → | C/O PCS 4 THRU 6 | P | | 4 | 20 |
| 21 | | | | | | | | | 21 |
| 22 | BOLT HEX HD - 5/8 - 18 UNF - 3A X 2LG | 4 | NI-CU-AL | QQ-N-286 | CL A, FORM 2, CONDTN: ANNEALED & AGE HARDENED, FF-S-85, TYPE 2, STYLE 10P | P | | 4 | 22 |
| 23 | NUT, ELESTAC STOP-5/8-18UNF-3B | 4 | NI-CU | QQ-N-281 | CL A, CD, MS17828-10F | P | | - | 23 |
| 24 | WASHER-1 1/2 O.D. X 21/32X 3/16 THK | 4 | NI-CU | QQ-N-281 | CL A | P | | - | 24 |

| ✳ | SOURCE |
|---|---|
| D | DESIGN YARD |
| F | FOLLOW YARD |
| P | NAVSECPHILADIV |
| N | NAVSHIPS FURNISHED |

# PARTS AND MATERIAL LIST

DRAWN SEF

REVIEWED T.E.S.

| SIZE | CODE IDENT | NAVSHIPS DRAWING NO. | | | |
|---|---|---|---|---|---|
| B | 25685 | SS | 522 | 4491146 | |
| SCALE: | | SHREV | A B C E G H | SH 3 | |

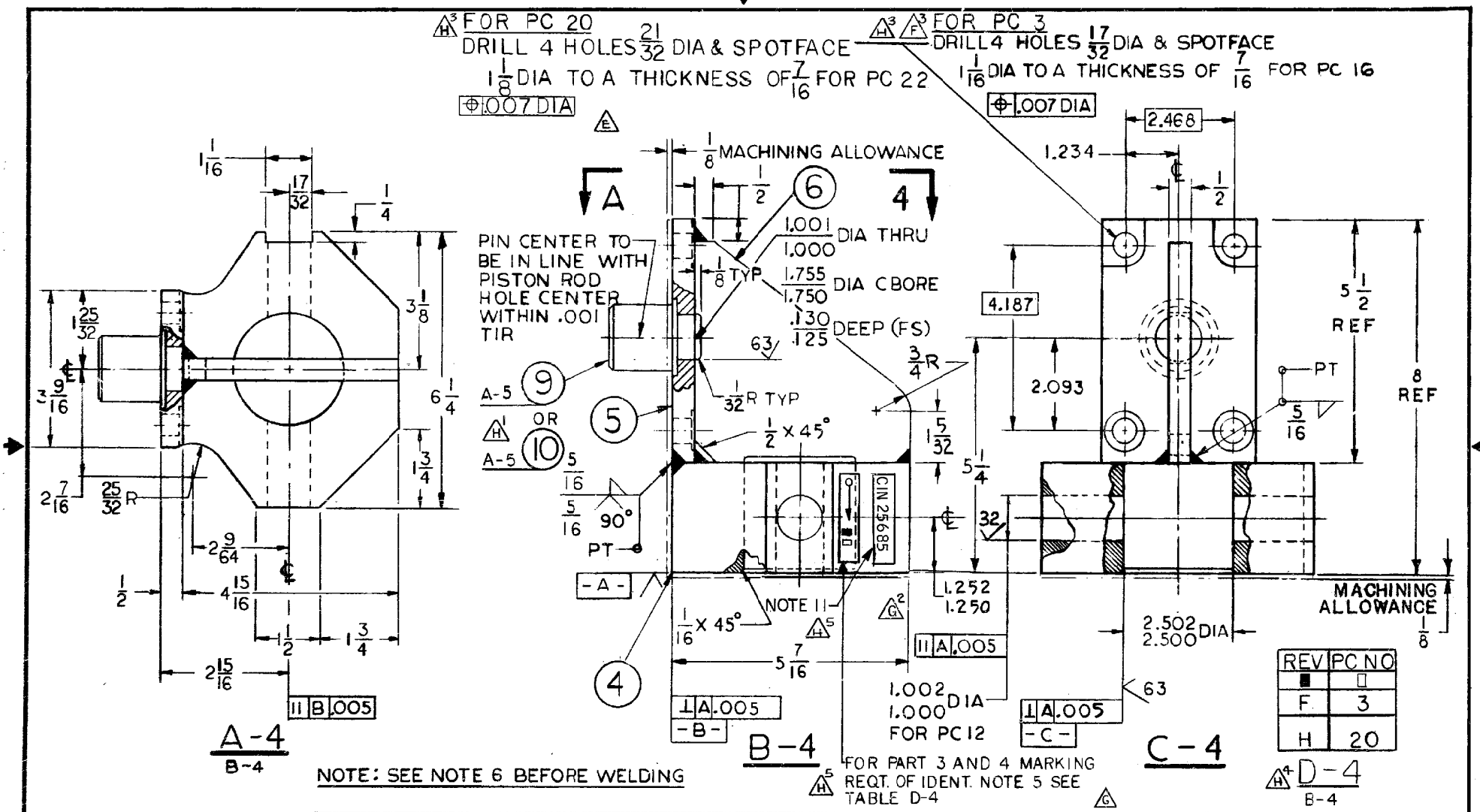


| MOUNTING BRACKET 3 & 20 | DRAWN SEF | SIZE | CODE IDENT | NAVSHIPS DRAWING NO. | | |
|---|---|---|---|---|---|---|
| | REVIEWED T.E.S. | B | 25685 | SS | 522 | 4491146 |
| | | SCALE: 1/2 | | SHREV | | SH 4 |

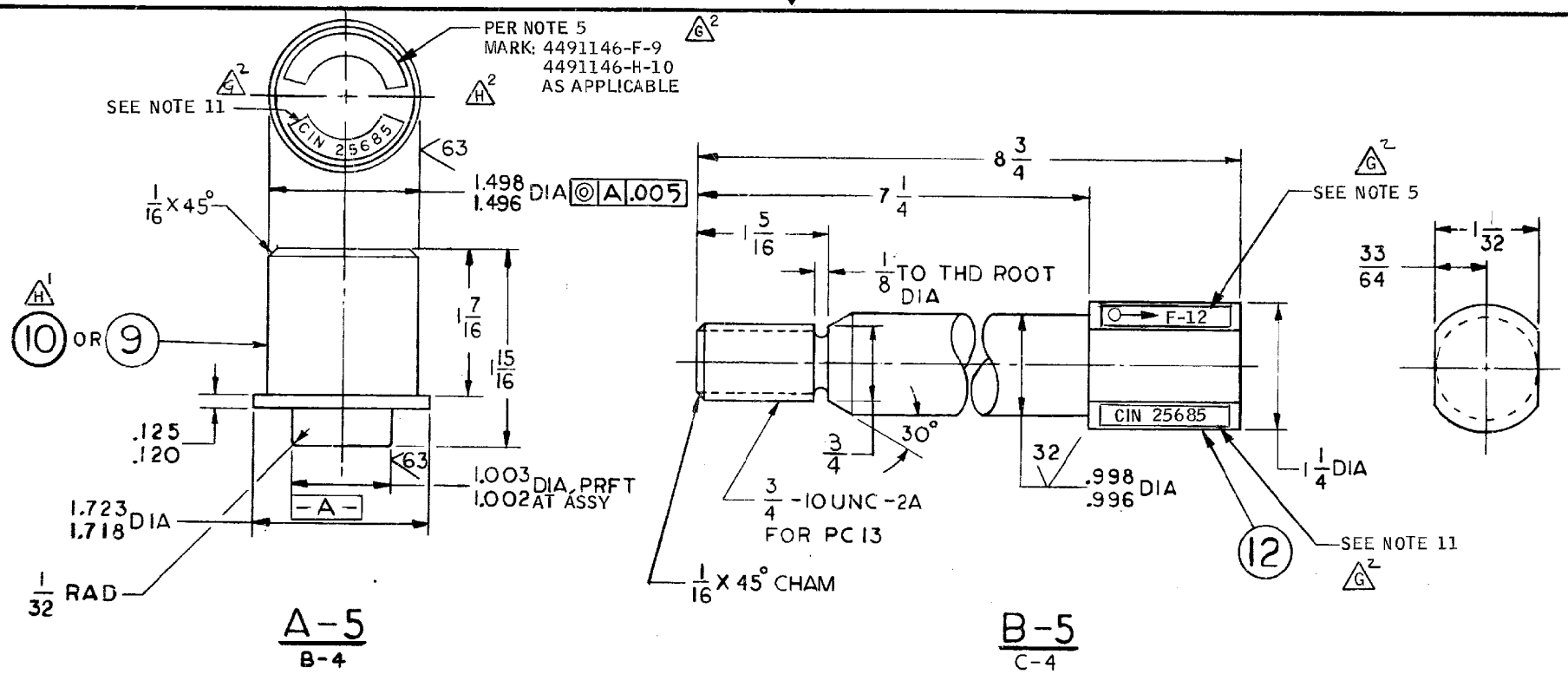


| LOCATING & CONNECTING PINS | DRAWN SEF<br>REVIEWED T.E.S. | SIZE | CODE IDENT | NAVSHIPS DRAWING NO. | | |
|---|---|---|---|---|---|---|
| | | B | 25685 | SS | 522 | 4491146 |
| | | SCALE: | | SHREV A G H | | SH 5 |

## REVISIONS

| REV | DET SH | | DATE | APPD |
|---|---|---|---|---|
| A | 1-6 | ORIGINAL ISSUE/DESIGN DEVELOPMENT ITEM NO 303/SEF | | |
| B | 3 | PC 16 & 17: CORR 1/2-20UNC TO 1/2-20UNF, STYLE D TO STYLE 10P & ESNA 09NU-083 TO ESNA 09NE-080. | 1-22-71 | |
| C | 3 | PC 4,5, & 6: PL WAS FB. 03-16-72/JMD | 3-16-72 | |
| D | C-4 | 5 1/4 DIM WAS 4; ADDED "REF" TO 5 1/2 & 8 DIM; DELETED 5" DIM. 02-09-73/HAS | 2-13-73 | |
| E | 3<br>4 | [1]: L/M PC 13: "09NE-120 REGULAR" WAS "09NU-120 HVY".<br>[2]: ~~B-4~~: ADDED 1/2 DIM AT TOP OF PC 6.<br>AUTHORITY: IZZI 08-17-76 TASK 8-25-76 SEF | 9-13<br>9-13-6<br>9-10-6 | |
| F | 1<br>2<br>4 | [1]: IN NEXT ASSY APPLICATION " MAST FAIRING" WAS " 4491143".<br>[2]: DELETED THE ABBREVIATION " ASSY " FROM NOTE 5. [3]: C-4: SPOTFACE " 1 1/16 DIA " WAS " 29/32 DIA ".<br>AUTHORITY: JEO 05-12-77 TASK 5-20-77 SEF | 5-23-77<br>5-23-77<br>5-23-77 | |
| G | 2<br>5,11<br>3 | [1] NOTE 2 & LM: DELETED LEVEL "C" AS REQD BY 0900-LP-016-6080. [2] ADDED NOTE 11 & CLARIFIED NOTE 5. DETAILS UPDATED TO SUIT. [3] PC 13 & 17: SUBST MS# FOR ESNA PART NO.<br>AUTHORITY: SAED CCBD #10 & SEF 032879 TASK | 4-24-79<br>4-24-9<br>4-24-9<br>4-23-79 | |
| H | 3,4,5<br>4 | (1) ADDED ASSY 2 AND ITEMS 10,20,22,23 & 24. (2) ADDED "MARK---" AT A-5. (3) ADDED "FOR PC 3" AND "FOR PC 20" AT C-4. (4) ADDED TABLE AT D-4. (5) REPLACED "SEE NOTE 5,11" WITH TWO CALLOUTS AT B-4.<br>AUTHORITY: JJM 051383 TASK | 7/17/84<br>5/1/84 | |

## REVISIONS

| REV | DET SH | | DATE | APPD |
|---|---|---|---|---|
| | | | | |

CONTINUED ON SHEET

| REVISIONS | SIZE | CODE IDENT | NAVSHIPS DRAWING NO. | | | |
|---|---|---|---|---|---|---|
| | B | 25685 | SS | 522 | 4491146 | |
| | SCALE: | | SH REV | A B C D E F G H | SH 6 | |