BILL OF MATERIAL

PART No.	QTY.	P.C.	QTY.	DESCRIPTION	MATERIAL	SPEC.	REF. DWG. NO.	REMARKS	WT.

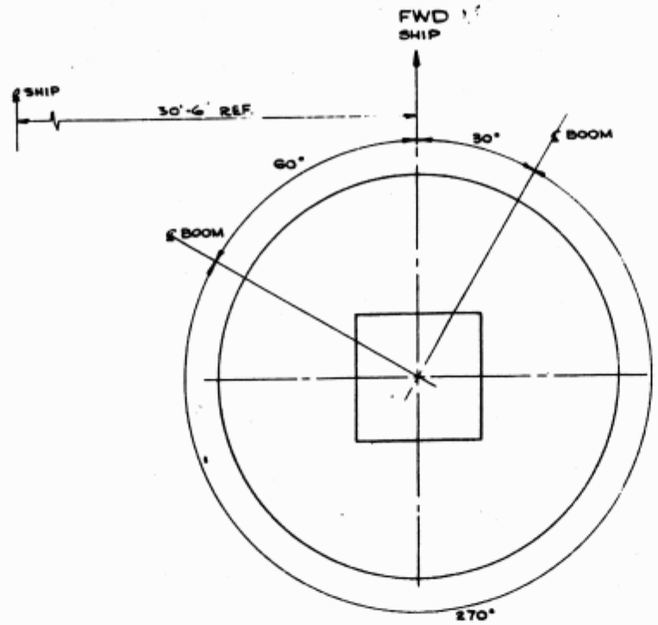

ARC OF TRAIN DIAGRAM

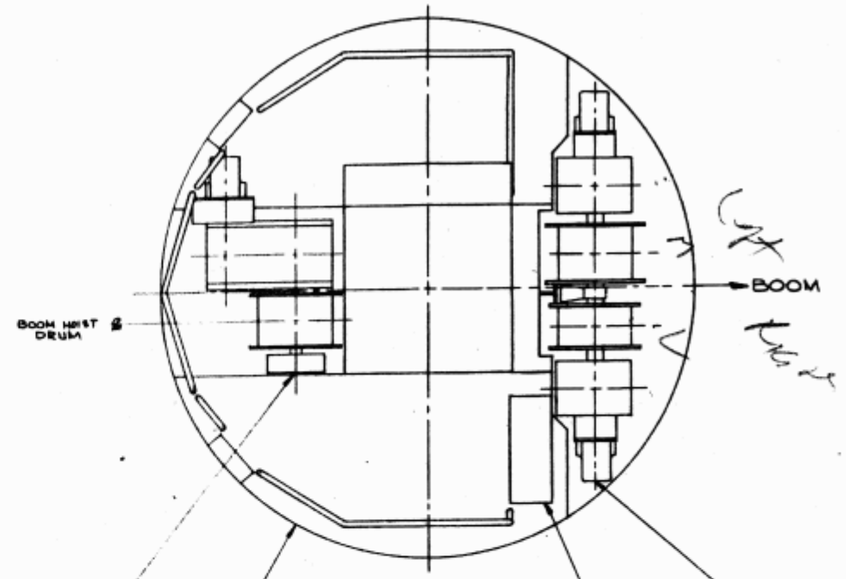

SECTION E-E
SCALE ½" = 1'-0"

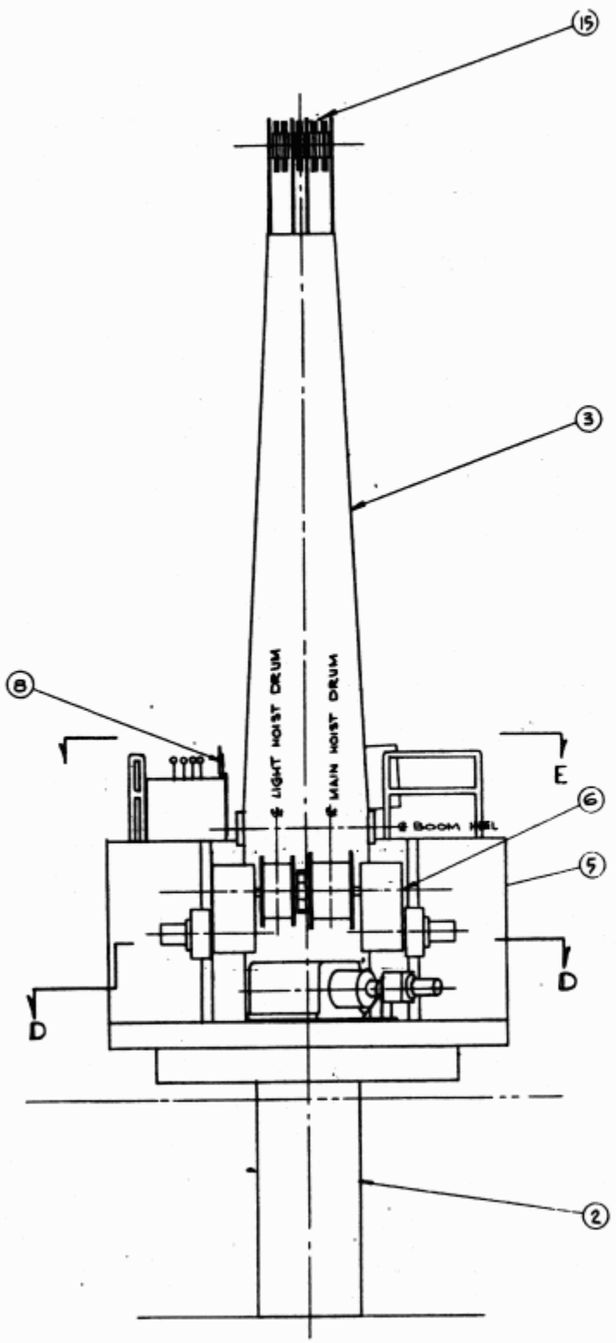

SECTION B-B
SCALE ½" = 1'-0"
WITH BOOM REMOVED FOR CLAIRITY

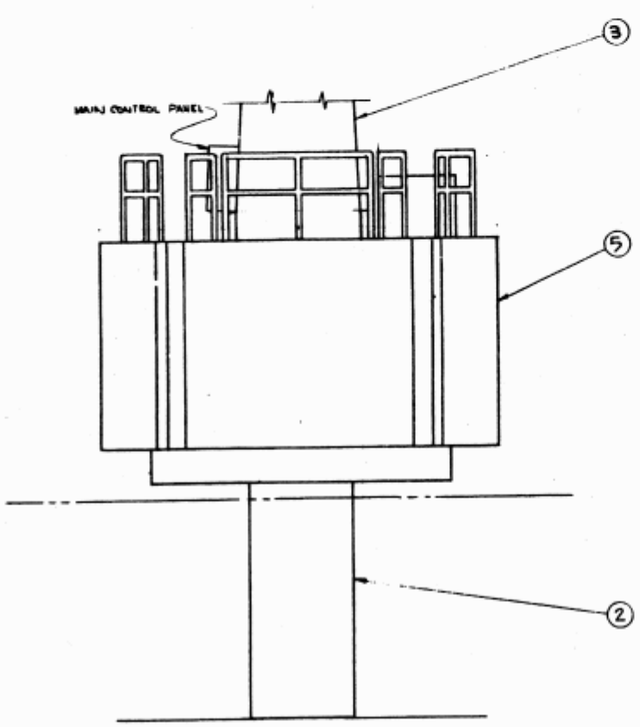

SECTION C-C
SCALE ½" = 1'-0"

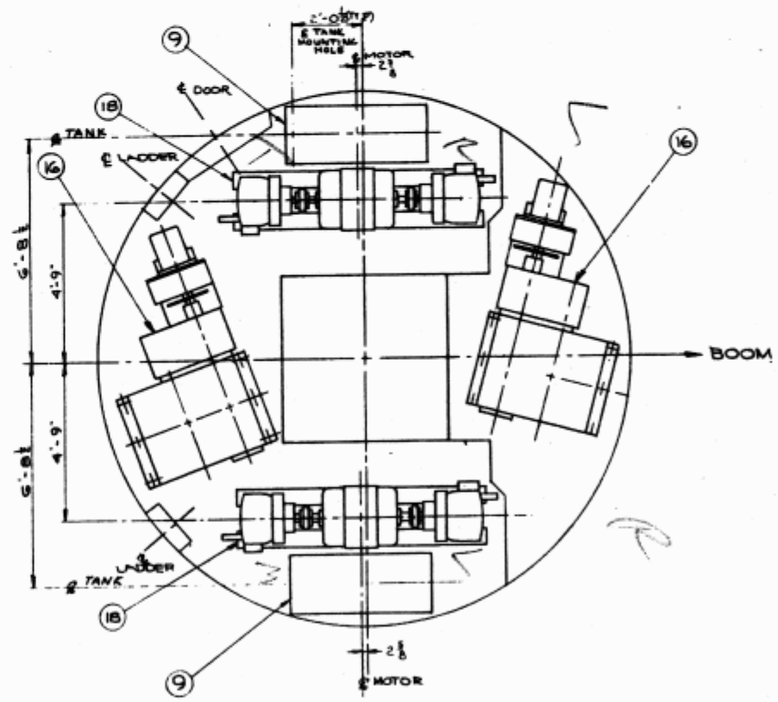

SECTION D-D
SCALE ½" = 1'-0"

4-E

COLBY CRANE & MANUFACTURING CO.	
E- 30031	REV D
SHT. 2 OF 2	

NAVSEA 0920-LP-029-4010