CRANE INSULATOR LINK REQUIREMENTS

GENERAL NOTE

THE CRANE NOTE PROVIDES PERFORMANCE REQUIREMENTS AND TESTING FABRICATION REQUIREMENTS FOR

A. INSULATOR LINKS OF VARIOUS CAPACITIES (SEE TABLE 15-E)

B. INSULATOR LINK GAUGES

1. THESE LINKS ARE INSTALLED BETWEEN THE CRANE LIFTING HOOK AND THE HOIST BLOCK TO PROTECT THE LOAD UNDER THE HOOK AND PERSONNEL IN CONTACT WITH THE HOOK FROM:

   A. VOLTAGES INDUCED IN THE CRANE STRUCTURE OR WIRE ROPES FROM RADIO FREQUENCY (RF) TRANSMITTING ANTENNAS

   B. INTERNAL CRANE ELECTRICAL FAULTS.

   C. INADVERTENT CONTACT BETWEEN THE CRANE STRUCTURE OR WIRE ROPE(S) AND EXTERNAL POWER SOURCES.

3. EACH INSULATOR LINK SHALL HAVE A MINIMUM BREAKING STRENGTH OF FIVE TIMES ITS RATED CAPACITY.

4. THE METAL SPOKE ENDPIECES SHALL CONSIST OF A SERIES OF SPOKES LOCATED RADIALLY ON THE BODY OF THE UNIT. THE METAL SPOKE ENDPIECES SHALL BE FABRICATED FROM HIGH-STRENGTH STEEL, CONFORMING TO ASTM-A148, GRADE 80-50. THE THREADS CUT INTO THE METAL SPOKE ENDPIECES SHALL BE CLASS 2, IN ACCORDANCE WITH FED-STD-H28.

5. THE METAL SPOKE ENDPIECES, SUPPORTING FIBERGLASS ROVING, SHALL BE SUFFICIENTLY SEPARATED TO PROVIDE THE RADIO FREQUENCY (RF) ATTENUATION AND HIGH-VOLTAGE RATING SPECIFIED HEREIN.

6. THE METAL SPOKE ENDPIECES SHALL BE TIN PLATED IN ACCORDANCE WITH ASTM B545 OR ZINC PLATED IN ACCORDANCE WITH ASTM-B633.

7. THE METAL SPOKE ENDPIECES SHALL BE WOUND WITH HIGH-TENSILE-STRENGTH GLASS FILAMENT IMPREGNATED WITH EPOXY RESIN. A LAYER OF THIS SAME MATERIAL SHALL BE CIRCUMFERENTIALLY WOUND OVER THE LONGITUDINAL STRANDS TO INDUCE EQUAL TENSION IN ALL STRANDS (SEE SECTION II-C).

8. THE LINK SHALL BE ENCAPSULATED WITH POLYURETHANE ELASTOMER (CALTHANE 1900). THE LINK SHALL HAVE AN OUTER JACKET MADE OF POLYURETHANE (CALTHANE NF 310W), TINTED TO AN INTERNATIONAL ORANGE COLOR. LINKS WITH CAPACITIES GREATER THAN OR EQUAL TO 6000 POUNDS SHALL HAVE A MINIMUM 3/8 INCH OUTER JACKET. LINKS WITH CAPACITIES LESS THAN 6000 POUNDS SHALL HAVE A MINIMUM 3/16 INCH OUTER JACKET.

9. THE INSULATOR LINK METAL SPOKE ENDPIECE SHALL BE STAMPED OR ENGRAVED AS SHOWN IN DETAIL 20-D WITH THE FOLLOWING INFORMATION:

   1. RATED CAPACITY (IN POUNDS)
   2. MANUFACTURER'S SERIAL NUMBER
   3. KV RATING
   4. TRAMMEL POINTS (TRAMMEL POINTS WOULD BE INDENTED AFTER THE LINK HAS BEEN ASSEMBLED. SEE NOTE 11).

10. AN INSULATOR LINK GAUGE SHALL BE PROVIDED FOR EACH INSULATOR LINK. THE GAUGE IS USED TO VERIFY THAT ELONGATION OF THE GLASS FIBER HAD NOT OCCURRED. EACH GAUGE SHALL CONSIST OF A BAR OF APPROPRIATE LENGTH AND TWO PUNCHES (SEE DETAIL 20-B). THE CORRESPONDING INSULATOR LINK MANUFACTURER'S SERIAL NUMBER SHALL BE STAMPED OR ENGRAVED ON THE GAUGE.

11. PRIOR TO APPLYING ANY LOAD TO AN INSULATOR LINK, THE TRAMMEL POINTS SHALL BE INDENTED INTO EACH INSULATOR LINK BY FIRMLY HOLDING THE GAUGE OVER THE INSULATOR LINK AND STRIKING THE PROTRUDING END OF EACH PUNCH INTO THE METAL SPOKE ENDPIECES. THE GAUGE SHALL HAVE ENGRAVED OR STAMPED INTO IT THE DISTANCE, IN INCHES, BETWEEN TRAMMEL POINTS AND THE TEMPERATURE AT WHICH THE POINTS WERE INSTALLED.

12. THE MANUFACTURER SHALL PROVIDE THE RECOMMENDED MAINTENANCE AND TESTING PROCEDURES AND SCHEDULES.

TESTING AND INSPECTION REQUIREMENTS

MAGNETIC PARTICLE EXAMINATION

PRIOR TO PLATING, THE METAL SPOKE ENDPIECES (EXCEPT FEMALE THREADS) SHALL BE INSPECTED IN ACCORDANCE WITH THE MAGNETIC PARTICLE EXAMINATION PROCEDURES OF ASTM E709. INDICATION OF CRACKS SHALL BE A CAUSE FOR REJECTION

VISUAL INSPECTION

EACH INSULATOR LINK SHALL BE VISUALLY INSPECTED TO ENSURE THAT THE DIMENSIONS, FINISH, QUALITY OF WORKMANSHIP AND OTHER REQUIREMENTS ARE IN ACCORDANCE WITH THIS DRAWING. ANY LINK CONTAINING A DEFECT SHALL BE REJECTED.

PROOF LOAD TEST

THE INSULATOR LINK SHALL BE SUBJECTED TO TWO TIMES THE RATED CAPACITY OF THE LINK. THE APPLICATION OF PROOF LOAD SHALL BE FOR ONE MINUTE. AFTER RELEASING THE PROOF LOAD, THE LINK SHALL BE EXAMINED. SURFACE RUPTURES OR OTHER DEFECTS THAT WOULD INTERFERE WITH SERVICEABILITY ARE CAUSE FOR REJECTION. NO PERMANENT DEFORMATION OR ELONGATION SHALL OCCUR AS A RESULT OF THE TEST.

HIGH-VOLTAGE DIELECTRIC TEST

EACH INSULATOR LINK SHALL BE SUBJECTED TO A DIELECTRIC TEST AT TWO TIMES THE VOLTAGE RATING OF THE INSULATOR LINK. THE VOLTAGE SHALL BE APPLIED BETWEEN THE METAL SPOKE ENDPIECES FOR ONE MINUTE WITH NO SIGNS OF ELECTRICAL FAILURE OR OTHER EVIDENCE OF ELECTRICAL BREAKDOWN. THE MAXIMUM LEAKAGE CURRENT FOR THIS TEST SHALL NOT (A) EXCEED 15 MICRO AMPS PER THOUSAND VOLTS. THE CONTRACTOR SHALL RECORD THE PREVAILING ATMOSPHERIC LEAKAGE CURRENT.

TEST REPORT

A CERTIFIED TEST REPORT DOCUMENTING THE RESULTS OF THE ABOVE SPECIFIED TESTS SHALL BE SUBMITTED FOR EACH INSULATOR LINK.

CONTRACTOR QUALIFICATION

IN ORDER TO BE ABLE TO QUALIFY TO FABRICATE THE SUBJECT LINKS, THE CONTRACTOR MUST FURNISH A RECORD OF THE FOLLOWING TESTS:

RF TEST

LINKS SHALL BE SUBJECTED TO AN RF TEST DEMONSTRATING THE EFFECTIVENESS OF THE INSULATOR LINK IN ATTENUATING RF SIGNALS FROM FIVE KILOHERTZ TO 100 MEGAHERTZ. A MINIMUM VOLTAGE ATTENUATION RATIO OF 50:1 IS REQUIRED. IF THE CONTRACTOR IS ACTIVELY ENGAGED IN MANUFACTURING INSULATOR LINKS AND THE SUBJECT LINK DESIGN HAS BEEN PREVIOUSLY PROOFED AND NO PROCESSING CHANGES HAVE OCCURRED THAT WOULD AFFECT LINK PERFORMANCE, THIS TEST NEED NOT BE PERFORMED.

BREAKING LOAD TEST

LINK SHALL BE SUBJECTED TO A BREAKING LOAD TEST (SEE NOTE 3) TO PROVE THE CONTRACTORS DESIGN AND FABRICATION. ANY PHYSICAL SIGNS OF FAILURE ARE A CAUSE FOR REJECTION. THE BREAKING LOAD TESTS REMAIN VALID IF THE CONTRACTOR IS ACTIVELY ENGAGED IN MANUFACTURING INSULATOR LINKS AND NO CHANGES IN PROCESSING HAVE OCCURRED THAT WOULD STRUCTURALLY OR ELECTRICALLY AFFECT LINK PERFORMANCE.

GENERAL DRAWING NOTES

1. DEVIATIONS FROM THIS DRAWING ARE PERMITTED OR AREAS SUBJECT TO DEVELOPMENT ARE INDICATED WHERE NOTED WITH AN ASTERISK (*).
2. INTERPRET THIS DRAWING PER DOD-STD-100.
3. REQUIRED QUANTITIES IN PARTS LIST ARE FOR ONE LINK ONLY.

ORDERING DATA

THE ORDERING ACTIVITY SHALL SPECIFY THE FOLLOWING:

1. INSULATOR RATED CAPACITY IN POUNDS (SEE TABLE 15-E)
2. VOLTAGE RATING (SEE TABLE 15-E)

REVISION

ZONE	LTR	DESCRIPTION	DATE	APPROVED
6-D	A	REVISED: IN TESTING AND INSPECTION REQUIREMENTS, UNDER HIGH-VOLTAGE DIELECTRIC TEST: 15 MICRO AMPS WAS 5 MICRO AMPS. THIS CHANGE CORRECTS A TYPOGRAPHICAL ERROR		

98	99	PC NO.	DESCRIPTION	MATERIAL	MATL SPEC	REMARKS	DET LOC REF DWG
1		7	BAR	WROUGHT AL ALLOY	SAE J454 ALLOY 7075-T651	SEE NOTE 10	
2		6	ROD	ALLOY STEEL HEAT-TREATED ASTM-A574	ANSI B18.3	SEE NOTE 11	
	AR	5	CALTHANE NF 310	POLYURETHANE		SEE NOTE 8	
	AR	4	CALTHANE 1900	POLYURETHANE ELASTOMETER		SEE NOTE 8	
	AR	3	GLASS FILAMENT IMPREGNETED W/ EPOXY RESIN	FILAMENT FIBERGLASS	MIL-R-60346 TYPE 3, CLASS 1 FINISH	SEE NOTE 7	
	1	2	DIELECTRIC SEPARATOR	FILLER-DI-ELECTRIC MATERIAL			
	2	1	METAL SPOKE END PIECE	STEEL	ASTM A148 GR 80-50	SEE NOTE 4, 5, 6 AND 9	
X			INSULATOR LINK GAUGE	VARIOUS			20-B
	X		CRANE INSULATOR LINK ASSEMBLY	VARIOUS			11-C

NO. REQ'D / ASSY NO.

PARTS LIST

3	2	1	SH	REVISION STATUS OF SHEETS
-	-	A	REV	

DIMENSIONAL TOLERANCES - UNLESS OTHERWISE SPECIFIED

MACHINED DIMENSION	DECIMALS 2 PL	DECIMALS 3 PL	WELDMENT DIMENSION	TOLERANCE
OVER 6"	± .02	± .005	UNDER 24"	± .12
6" TO 24"	± .03	± .010	24" & OVER	± .25
24" & OVER	± .06	± .015		
ANGULAR ± 0° 30'			ANGULAR	

125√ UNLESS OTHERWISE NOTED

√ UNLESS OTHERWISE NOTED

APPROVED FOR PUBLIC RELEASE, DISTRIBUTION IS UNLIMITED

UNLESS OTHERWISE NOTED DIMENSIONS ARE IN INCHES

TOLERANCES ARE IN ACCORDANCE WITH COMMERCIAL PRACTICE UNLESS OTHERWISE INDICATED ON DRAWING

CONTRACT NO N00024-86-C-4030

PREP ACTIVITY WESTINGHOUSE, M.T.D. CAGE CODE 27684

	SIGNATURE	DATE
PREPARED	P.D. HORSETH	9/6/93
CHECKED	R.M. TANOWSKI	9/6/93
MD ENGR	J.E. MASUNICK	9/6/93
NAVY APPROVAL		
PROJ ENGR	J.P. HAHN	9/19/93
BR MD	T.W. HOBSON	9/19/93
DIV DIR	R.D. BRAXTON	9/20/93
CR DEP DIR	C.R. HALL	9/20/93
APPD FOR COMNAVSEA C.R. HALL		DATE 9/20/93

DEPARTMENT OF THE NAVY WASHINGTON, D.C. 20362-5101

NAVAL SEA SYSTEMS COMMAND

STANDARD DRAWING

LINKS, RADIO FREQUENCY, HIGH-VOLTAGE INSULATOR LINK, CYLINDER TYPE

SIZE	CAGE CODE	FSCM NO	DRAWING NO	REV
F	53711	803	6397427	A

SCALE NTS MASS (WEIGHT) SHEET - OF -

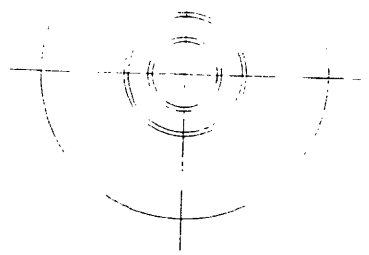

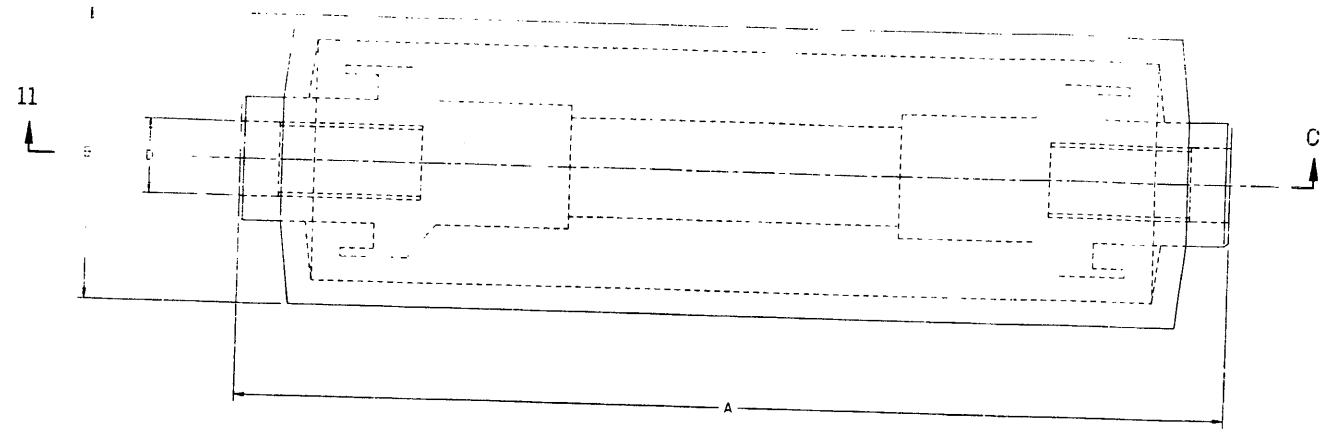

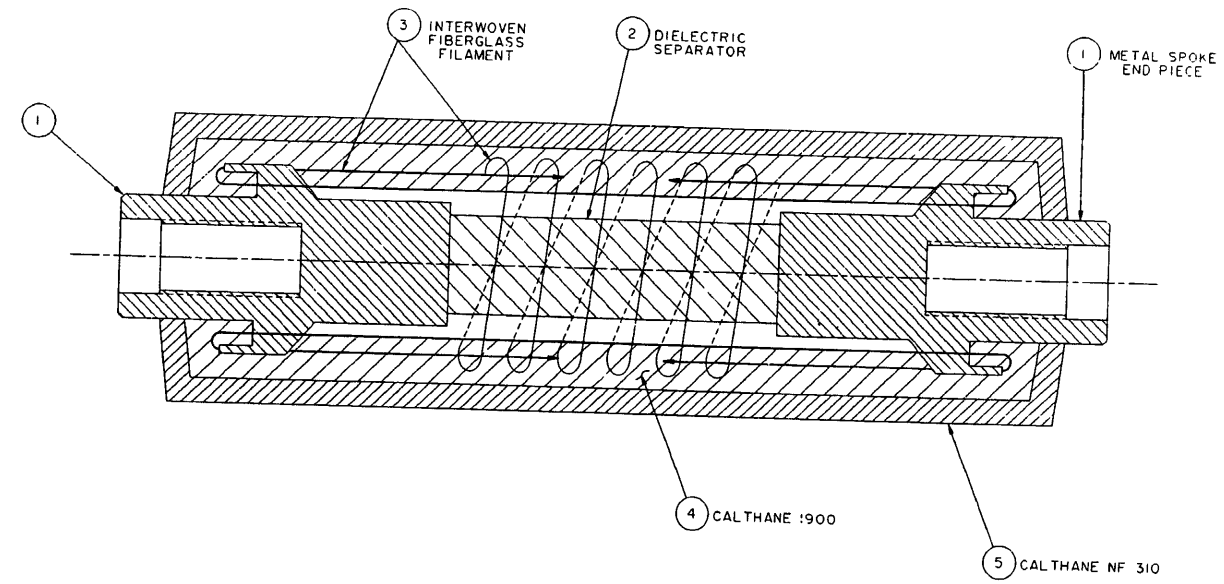

SECTION 11-C

CRANE INSULATOR LINK ASSEMBLY 99

SEE TABLE 15-E

TABLE 15-E

CAPACITY IN POUNDS	RATING IN KV	PROOF LOAD IN POUNDS	O. A. L. MAX.	O. D. MAX.	BOLTHOLE DIA. (DET 20-D)	THREADS AND COUNTER BORE
			A	B	C	D
1000	50	2000	13-1/2"	2-5/8"	1/8"	5/8" - 11UNC-2B THD X 1-1/4" DP. C' BORE 5/8" X 3/8" BOTH ENDS
	10		5-1/4"	2-5/8"		
2000	50	4000	13-1/2"	2-5/8"	1/8"	3/4" - 10UNC-2B THD X 1-1/4" DP. C' BORE 3/4" X 3/8" BOTH ENDS
	10		5-1/4"	2-5/8"		
4000	50	8000	15-1/2"	4-1/4"	3/16"	1-1/8" - 7UNC-2B THD X 2-1/8" DP. C' BORE 1-1/8" X 5/8" BOTH ENDS
	10		7-1/2"	4-1/4"		
6000	50	12.000	15-1/2"	4-1/4"	3/16"	1-1/4" - 7UNC-2B THD X 2-1/8" DP. C' BORE 1-1/4" X 5/8" BOTH ENDS
	10		7-1/2"	4-1/4"		
10.000	50	20.000	17"	6"	1/4"	1-3/8" - 6UNC-2B THD 2-3/8" DP. C' BORE 1-3/8" X 1" BOTH ENDS
	10		9-1/4"	6"		
20.000	50	40.000	17"	6"	1/4"	1-5/8" - 8UN-2B THD X 2-3/8" DP. C' BORE 1-5/8" X 1" BOTH ENDS
	10		9-1/4"	6"		
30.000	50	60.000	18-1/2"	7-3/4"	5/16"	2-1/4" - 8UN-2B THD X 2-15/16" DP. C' BORE 2-1/4" X 1" BOTH ENDS
	10		10-1/2"	7-3/4"		
40.000	50	80.000	18-1/2"	7-3/4"	5/16"	2-1/2" - 8UN-2B THD X 2-15/16" DP. C' BORE 2-1/2" X 1" BOTH ENDS
	10		10-1/2"	7-3/4"		
50.000	50	100.000	18-1/2"	7-3/4"	5/16"	2-3/4" - 8UN-2B THD X 2-15/16" DP. C' BORE 2-3/4" X 1" BOTH ENDS
	10		10-1/2"	7-3/4"		
60.000	50	120.000	19-3/4"	10"	5/16"	3-3/4" - 8UN-2B THD X 4-5/8" DP. C' BORE 3-3/4" X 1" BOTH ENDS
	10		11-3/4"	10"		
70.000	50	140.000	19-3/4"	10"	5/16"	3-3/4" - 8UN-2B THD X 4-5/8" DP. C' BORE 3-3/4" X 1" BOTH ENDS
	10		11-3/4"	10"		
80.000	50	160.000	19-3/4"	10"	5/16"	3-3/4" - 8UN-2B THD X 4-5/8" DP. C' BORE 3-3/4" X 1" BOTH ENDS
	10		11-3/4"	10"		
90.000	50	180.000	20-1/2"	16-1/2"	3/8"	4" - 8UN-2B THD X 5" DP. C' BORE 4" X 3/8" BOTH ENDS
	10		12-1/2"	16-1/2"		
100.000	50	200.000	20-1/2"	16-1/2"	3/8"	4" - 8UN-2B THD X 5" DP. C' BORE 4" X 3/8" BOTH ENDS
	10		12-1/2"	16-1/2"		
120.000	50	240.000	20-1/2"	16-1/2"	3/8"	4" - 8UN-2B THD X 5" DP. C' BORE 4" X 3/8" BOTH ENDS
	10		12-1/2"	16-1/2"		
160.000	50	320.000	20-1/2"	16-1/2"	3/8"	4" - 8UN-2B THD X 5" DP. C' BORE 4" X 3/8" BOTH ENDS OR 6" - 8UN-2B THD x 5" DP. C' BORE 6" X 3/8" BOTH ENDS
	10		12-1/2"	16-1/2"		
240.000	50	480.000	28"	19-5/8"	1/2"	6" - 8UN-2B THD X 8" DP. C' BORE 6" X 1/2" BOTH ENDS
	10		22"	19-5/8"		
280.000	50	560.000	50-1/2"	23"	1/2"	6" - 8UN-2B THD X 8" DP. C' BORE 6" X 1/2" BOTH ENDS OR 8" - 8UN-2B THD X 8" DP. C' BORE 8" X 1/2" BOTH ENDS
	10		42-1/2"	23"		

DEPARTMENT OF THE NAVY NAVAL SEA SYSTEMS COMMAND WASHINGTON, D.C. 20362-5101	SIZE	CAGE CODE	CSWBS	DRAWING NO.	REV
DRAWN	F	53711	803	6397427	-
ISSUED	SCALE:FULL	MASS (WEIGHT):		SHEET 2 OF 3	

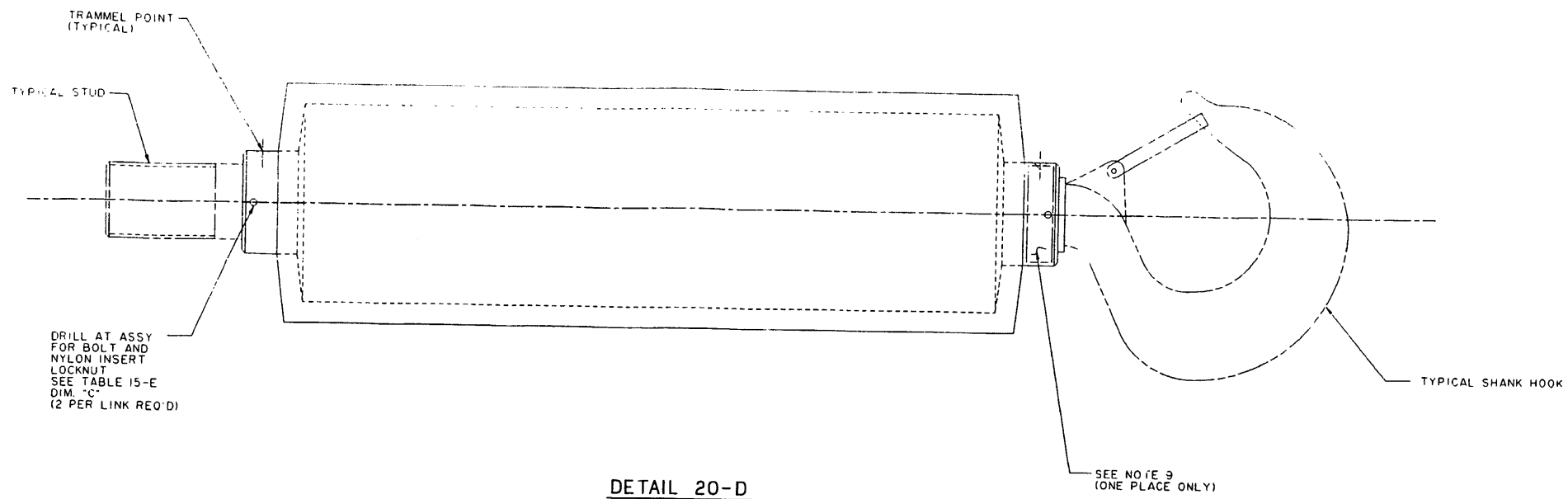

DETAIL 20-D
TYPICAL CRANE INSULATOR LINK ASSEMBLY

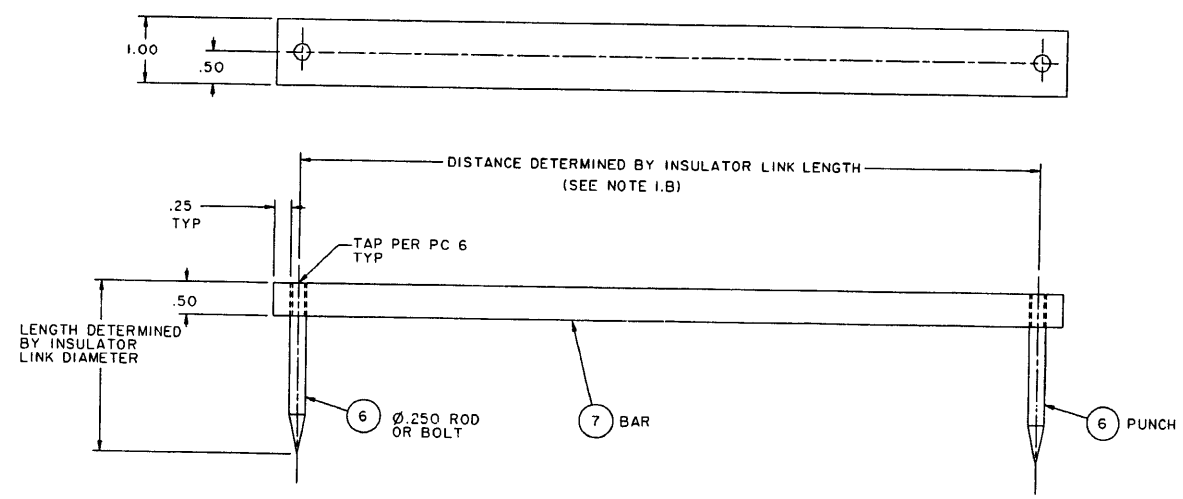

DETAIL 20-B
INSULATOR LINK GAUGE ASSEMBLY 98

DEPARTMENT OF THE NAVY NAVAL SEA SYSTEMS COMMAND WASHINGTON, D.C. 20362-5101	SIZE	CAGE CODE	ESWBS	DRAWING NO.	REV
DRAWN	F	53711	803	6397427	–
ISSUED	SCALE: FULL	MASS (WEIGHT):		SHEET 3 OF 3	