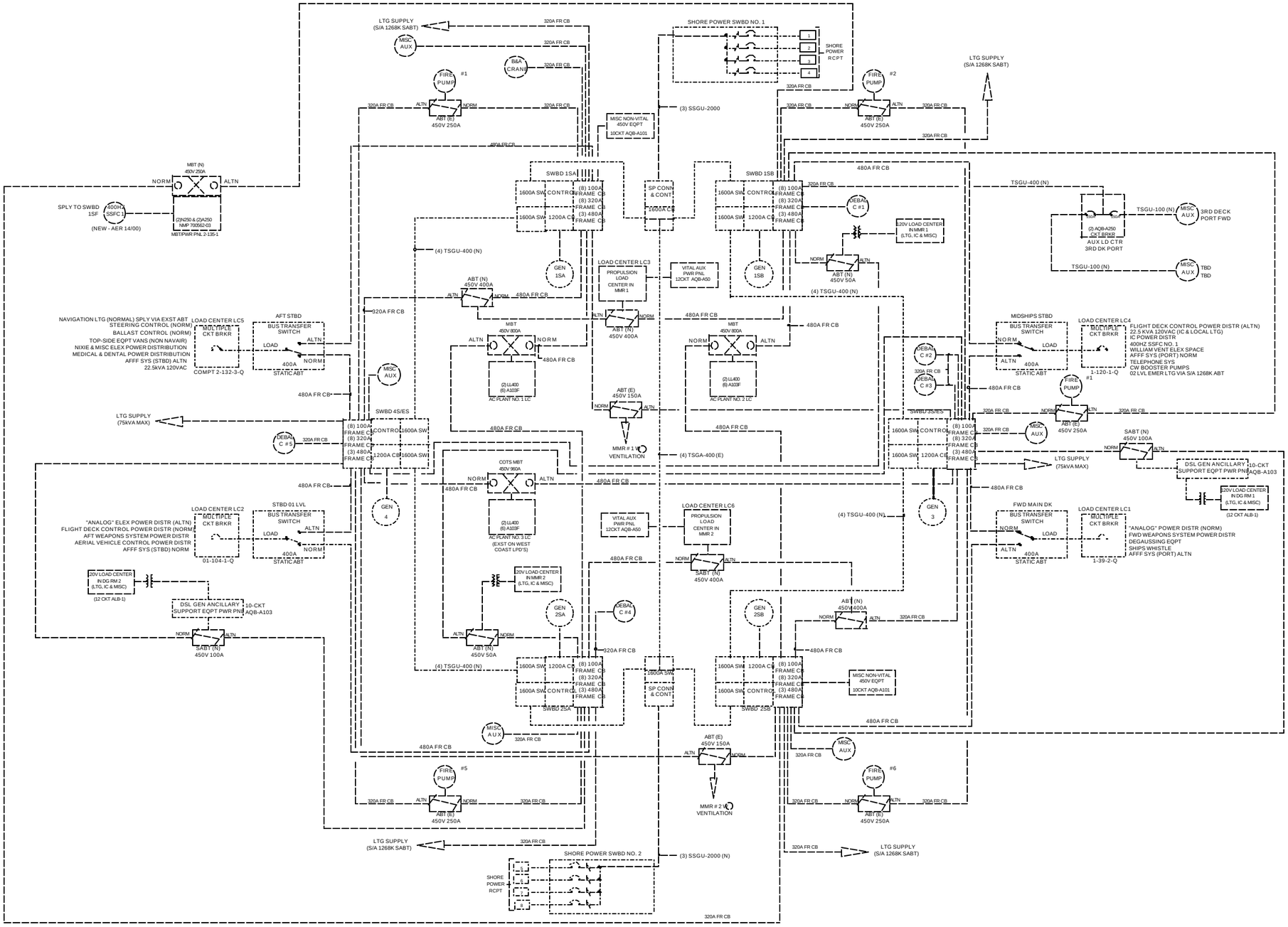

SIMPLIFIED ONE LINE DIAGRAM

SHIPS 450V 60HZ RING BUS DISTRIBUTION SYSTEM (PARTIAL & PRELIMINARY)
(4) 750kW SS STEAM TURBINE GENERATORS & (2) 750kW SS/EMERGENCY DIESEL GENERATORS WITH INTEGRATED SHIPALT 1169D

FIGURE 2: EXPANDED ONE-LINE DIAGRAM ILLUSTRATING LARGE FEEDERS CONNECTED TO NEW SWITCHBOARDS

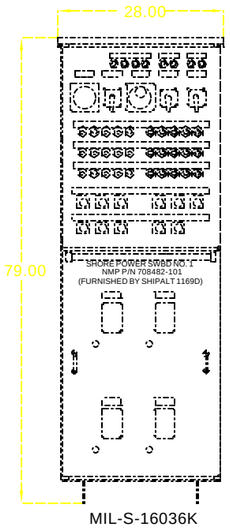

SS SWBD 1SA & SS SWBD 1SB IN MMR NO. 1

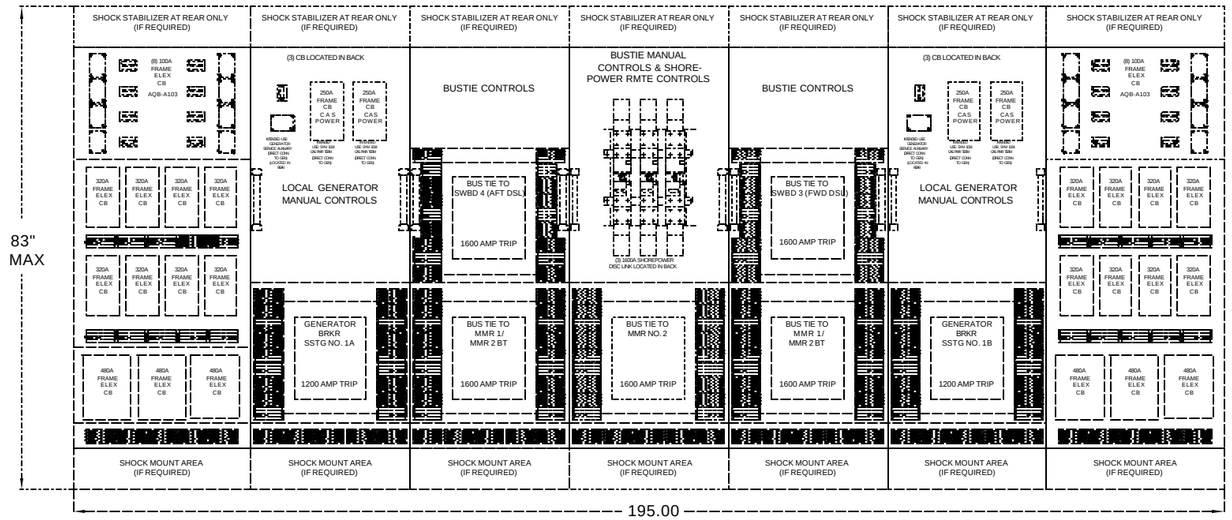

LPD7/8 EXST 1SA & 1SB = 194")
LPD9/13/14/15 EXST 1SA & 1SB = 217")

(DEPTH OF ALL UNITS SHALL NOT EXCEED 40.5", EXCLUDING ANY REQD SHOCK ISOLATOR EXTENSION)

SS/EMER SWBD 3 IN FWD DSL GEN RM

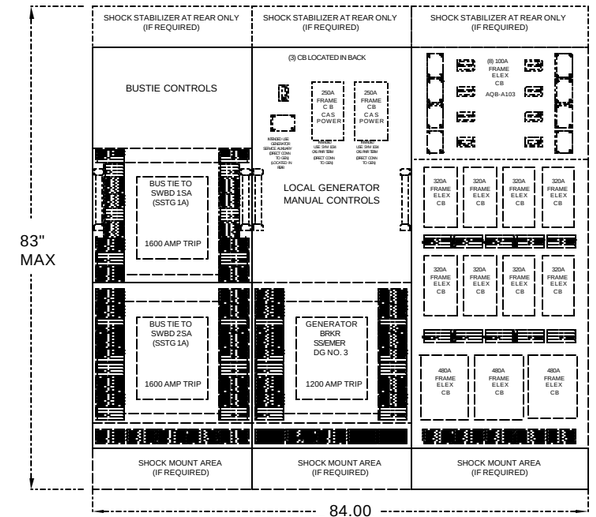

LPD7/8 EXST 1E SWBD = 101")
LPD9/13/14/15 EXST 1E SWBD = 102.125")

(DEPTH OF ALL UNITS SHALL NOT EXCEED 40.5", EXCLUDING ANY REQD SHOCK ISOLATOR EXTENSION)

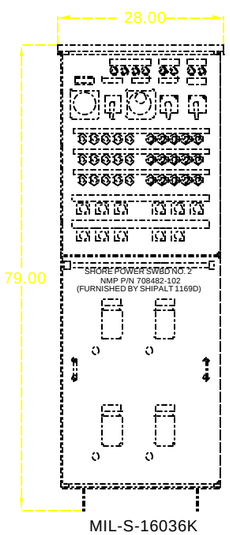

SS SWBD 2SA & SS SWBD 2SB IN MMR NO. 2

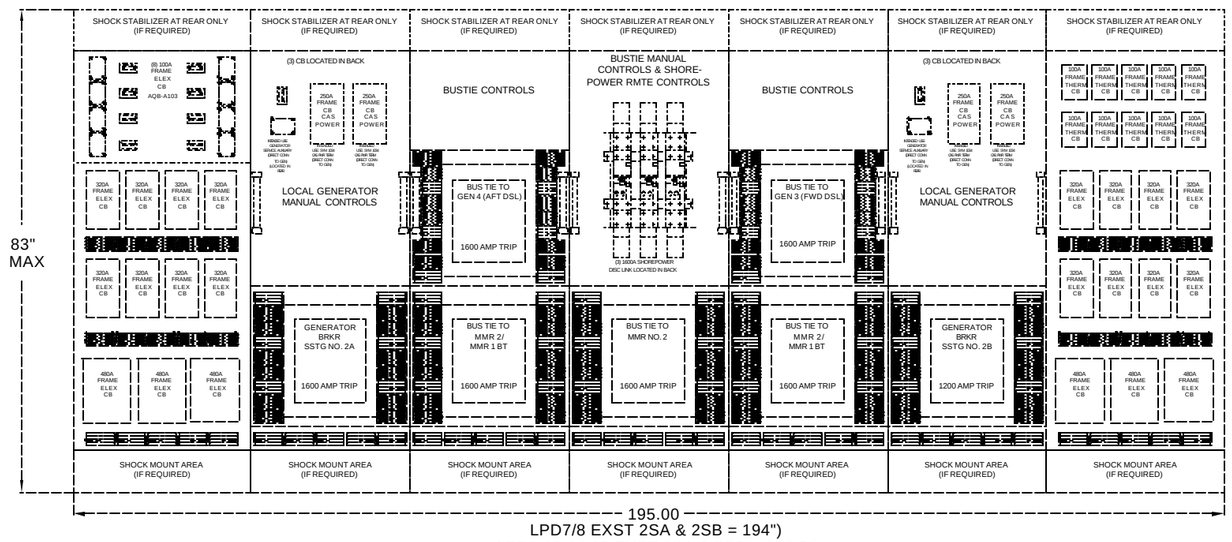

LPD7/8 EXST 2SA & 2SB = 194")
LPD9/13/14/15 EXST 2SA & 2SB = 212.5")

(DEPTH OF ALL UNITS SHALL NOT EXCEED 40.5", EXCLUDING ANY REQD SHOCK ISOLATOR EXTENSION)

SS/EMER SWBD 4 IN AFT DSL GEN RM

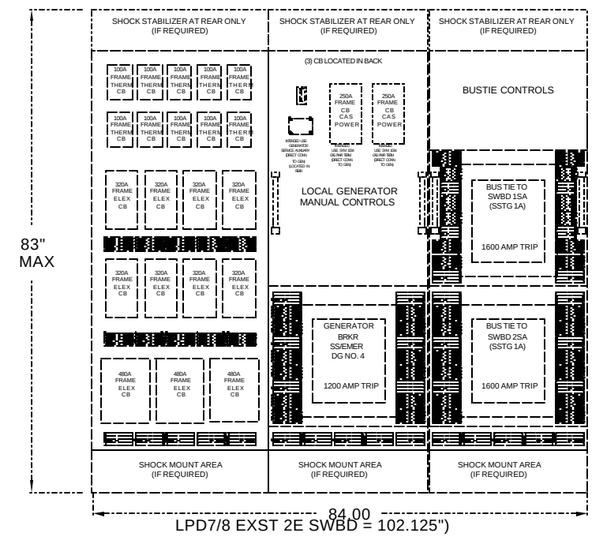

LPD7/8 EXST 2E SWBD = 102.125")
LPD9/13/14/15 EXST 2E SWBD = 91.625")

(DEPTH OF ALL UNITS SHALL NOT EXCEED 40.5", EXCLUDING ANY REQD SHOCK ISOLATOR EXTENSION)

PROPOSED MIL-S-901D (HIGH-IMPACT SHOCK) CERTIFIED COTS SWITCHGEAR FOR LPD-7, 8, 9, 13, 14 & 15

FIGURE 3: SWITCHBOARD ARRANGEMENT & CIRCUIT BREAKER CONFIGURATION

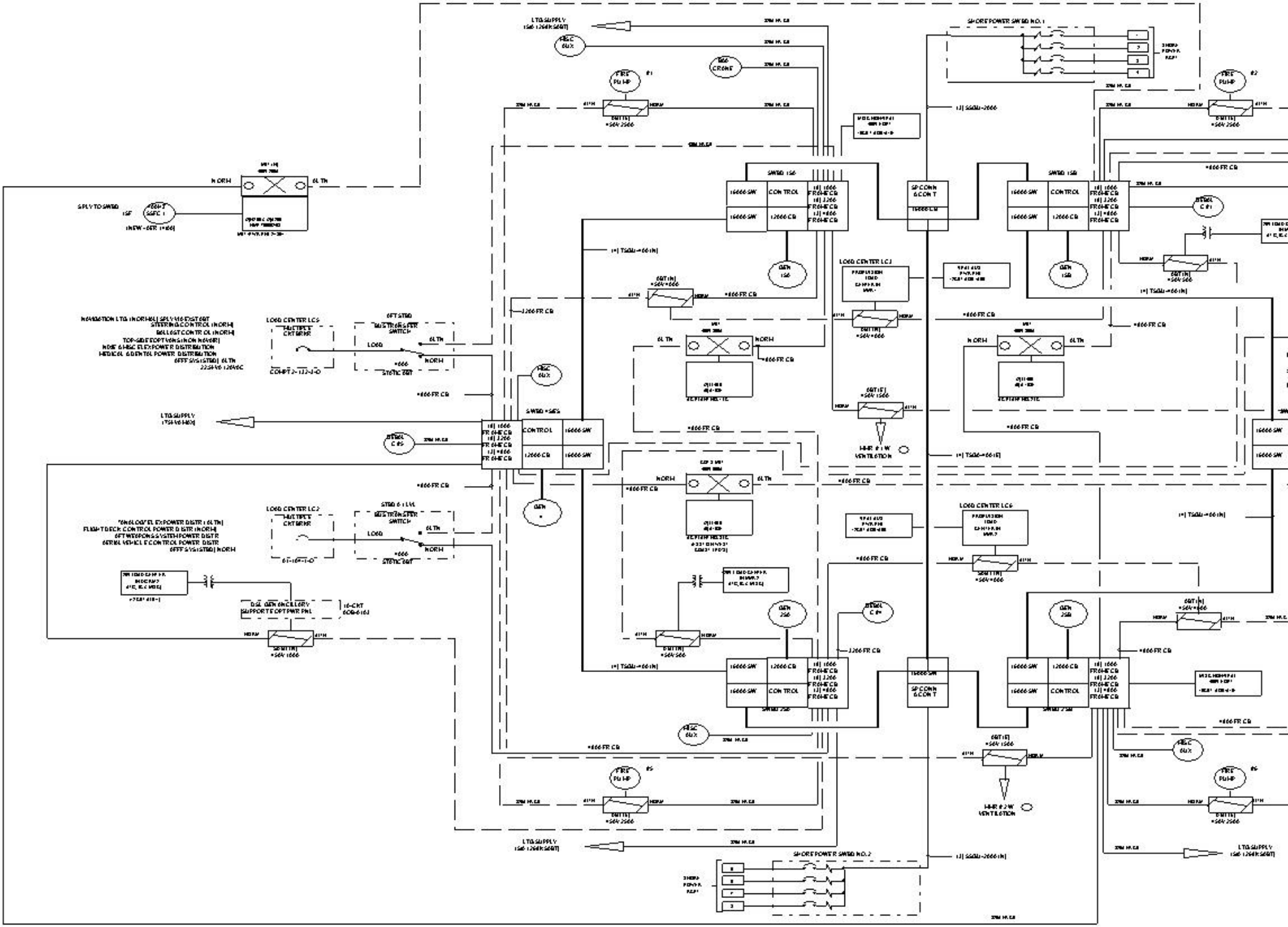

SIMPLIFIED ONE LINE DIAGRAM

SHIPS 450V 60HZ RING BUS DISTRIBUTION SYSTEM (PARTIAL & PRELIMINARY)

(4) 750KW SS STEAM TURBINE GENERATORS & (2) 750KW SS/EMERGENCY DIESEL GENERATORS WITH INTEGRATED SHIPALT 1169D

SS SWBD 1SA & SS SWBD 1SB IN MMR NO. 1

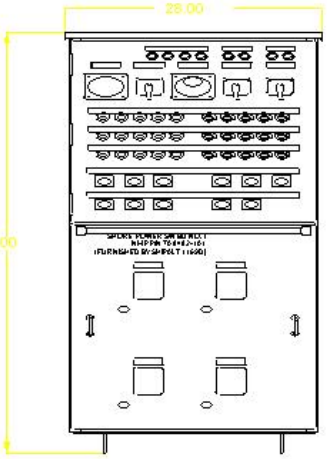

MIL-S-16036K

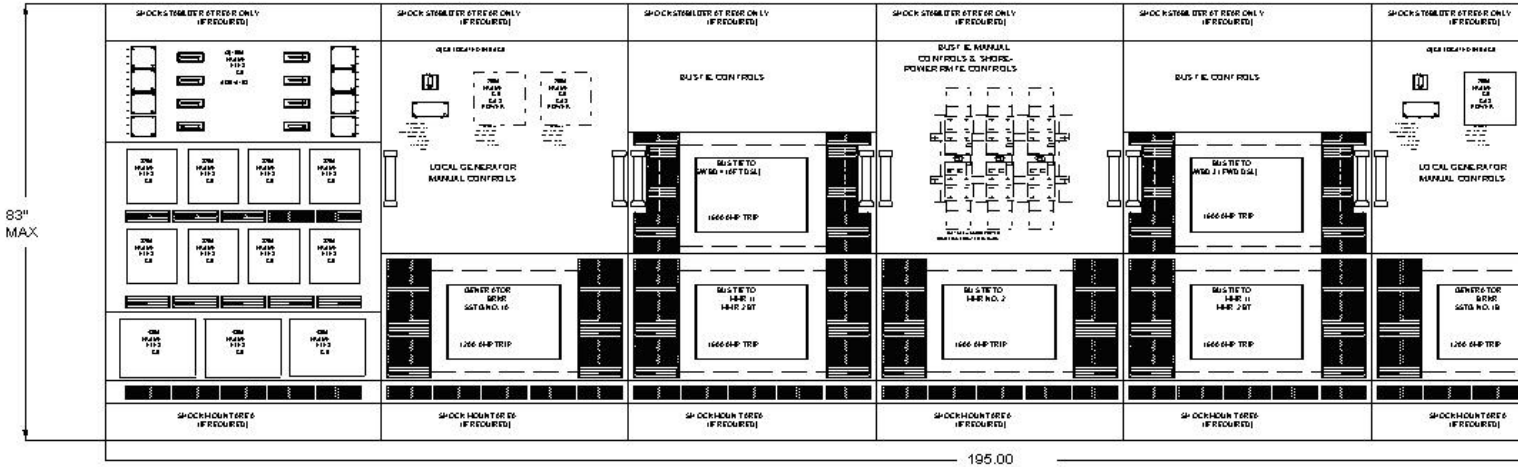

195.00

LPD7/8 EXST 1SA & 1SB = 194")

LPD9/13/14/15 EXST 1SA & 1SB = 217")

(DEPTH OF ALL UNITS SHALL NOT EXCEED 40.5", EXCLUDING ANY REQD SHOCK ISOLATOR EXTENSION)

SS SWBD 2SA & SS SWBD 2SB IN MMR NO. 2

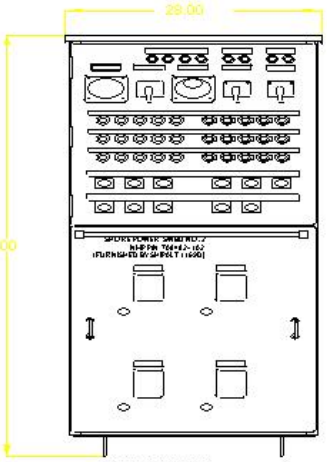

MIL-S-16036K

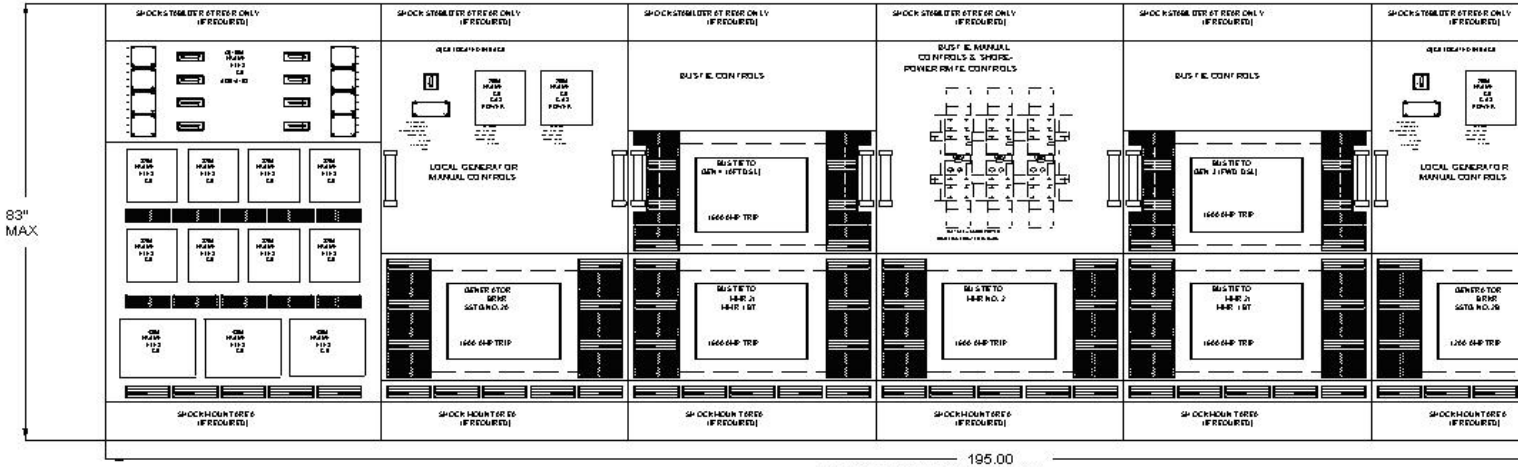

195.00

LPD7/8 EXST 2SA & 2SB = 194")

LPD9/13/14/15 EXST 2SA & 2SB = 212.5")

(DEPTH OF ALL UNITS SHALL NOT EXCEED 40.5", EXCLUDING ANY REQD SHOCK ISOLATOR EXTENSION)

PROPOSED MIL-S-901D (HIGH-IMPACT SHOCK) CERTIFIED COTS SWITCHGEAR FOR LPD-7, 8, 9, 13, 14 & 15