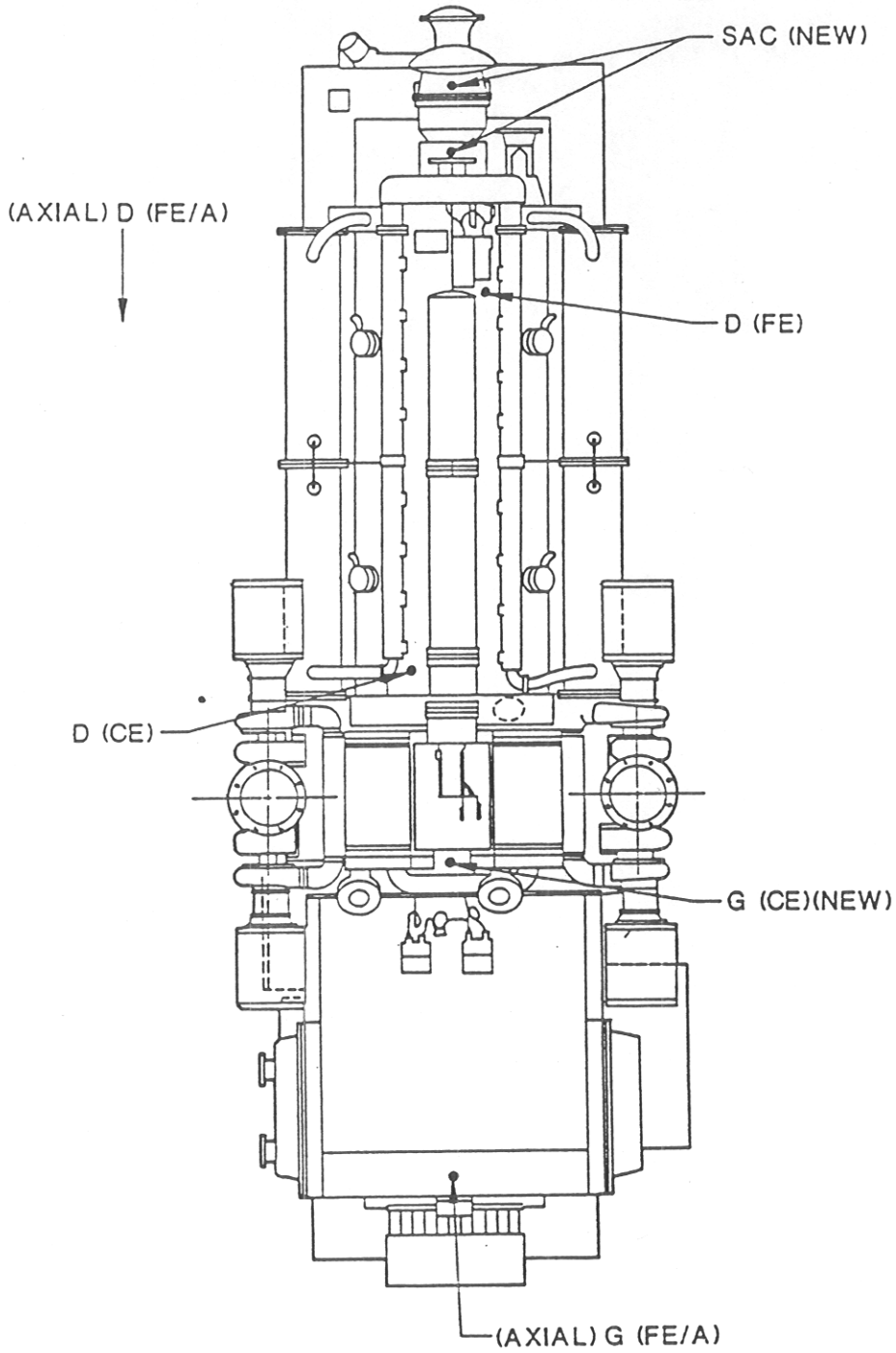

DISK LOCATION DRAWING
MCA-10, VIBRATION ANALYSIS

PAGE OF

MAINTENANCE REQUIREMENT CARD (MRC)
11ND NAVSEACENPAC 4700/2 (9-75)

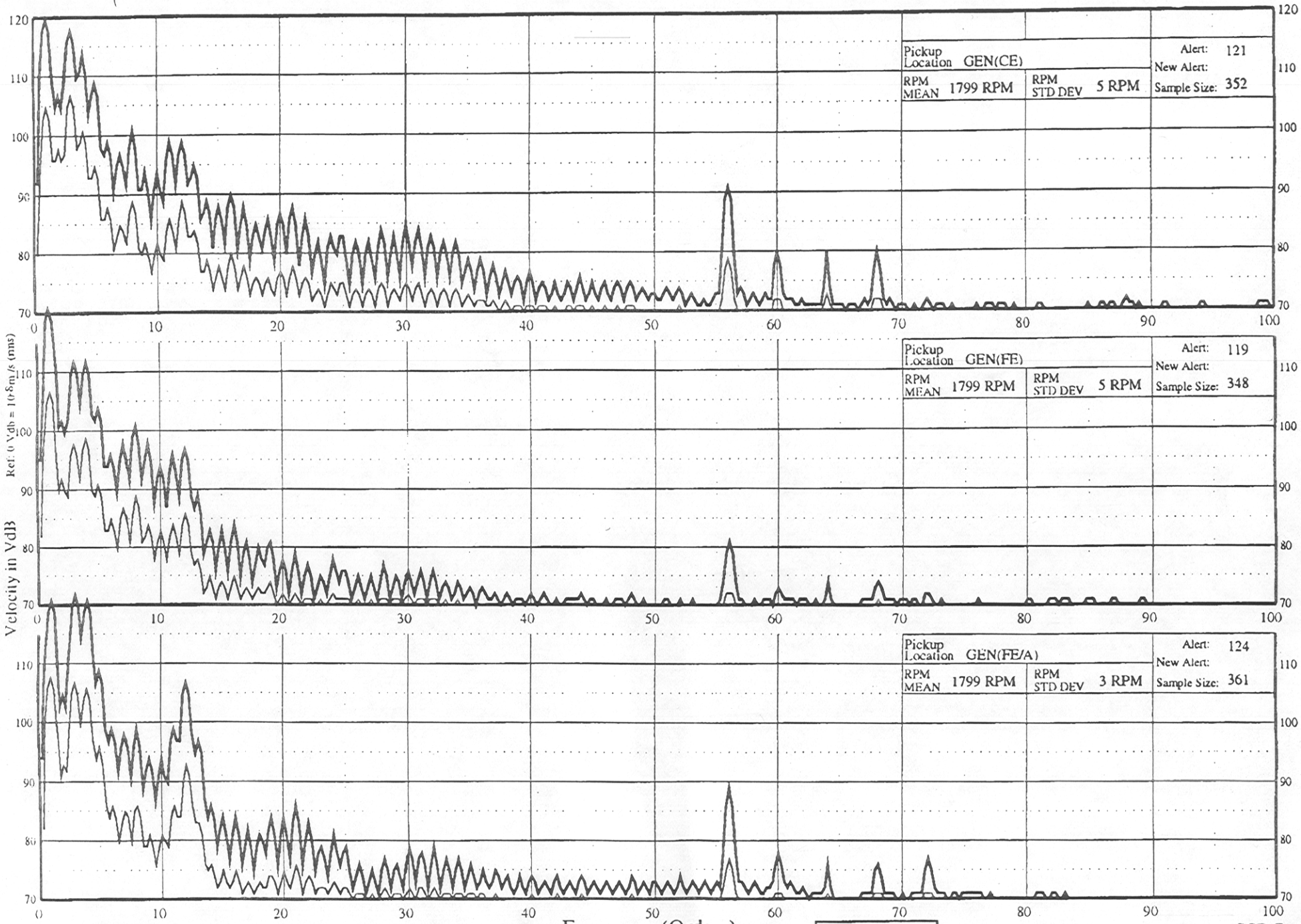

CLASS: FFG7

LOGREV: 2-MAY-97

m + 2s ———

m ———

NAVSSES
Philadelphia PA 19112-5083

NARROW BAND AVERAGE

SWAB: 00000
MID: 205004
PID:

SSDG

PAGE: 9D

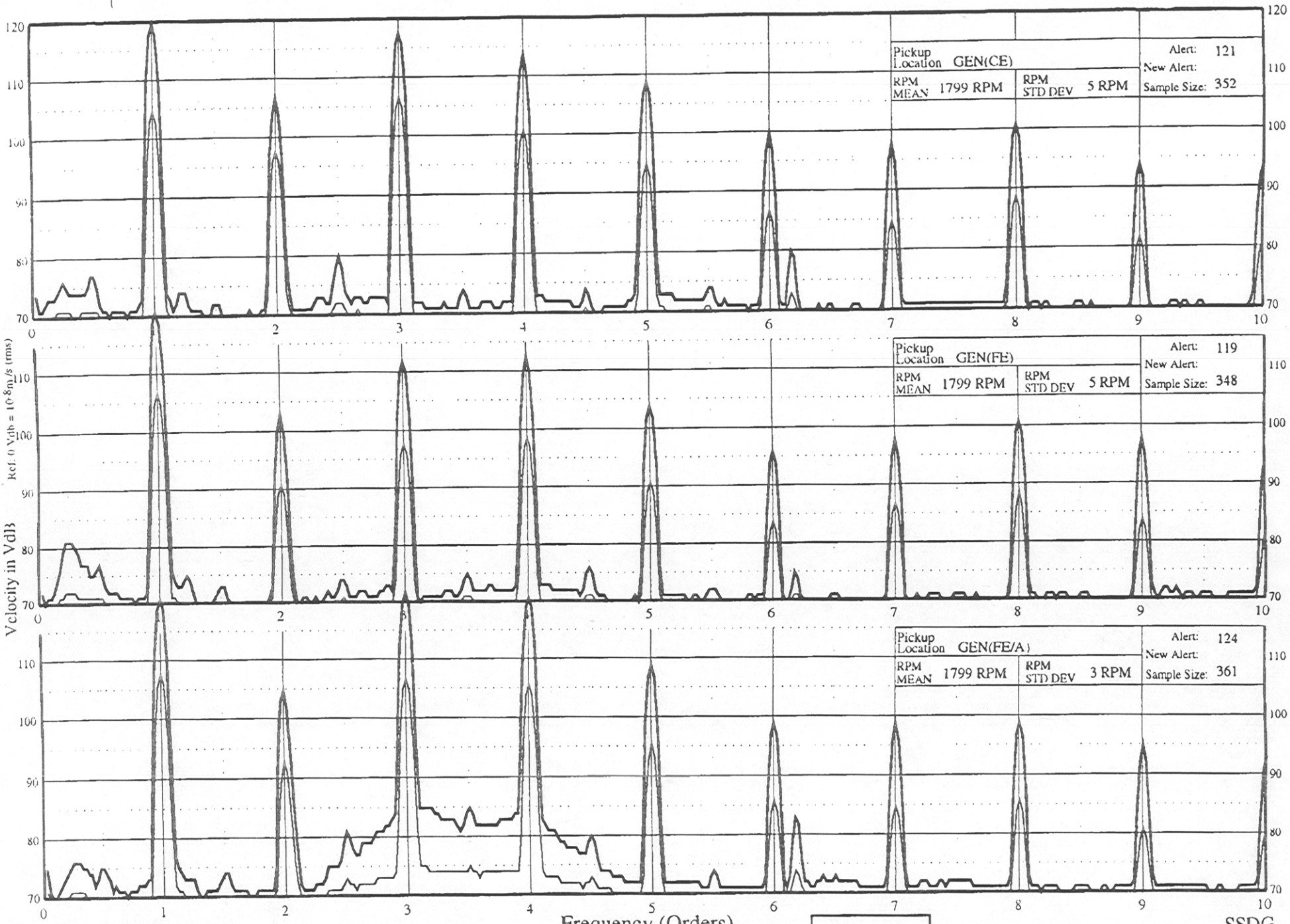

CLASS: FFG7

LOGREV: 2-MAY-97

m + 2s

m

NARROW BAND AVERAGE

NAVSSES
Philadelphia PA 19112-5083

SWAB: 00000
MID: 205004
PID:

SSDG

PAGE: 9C

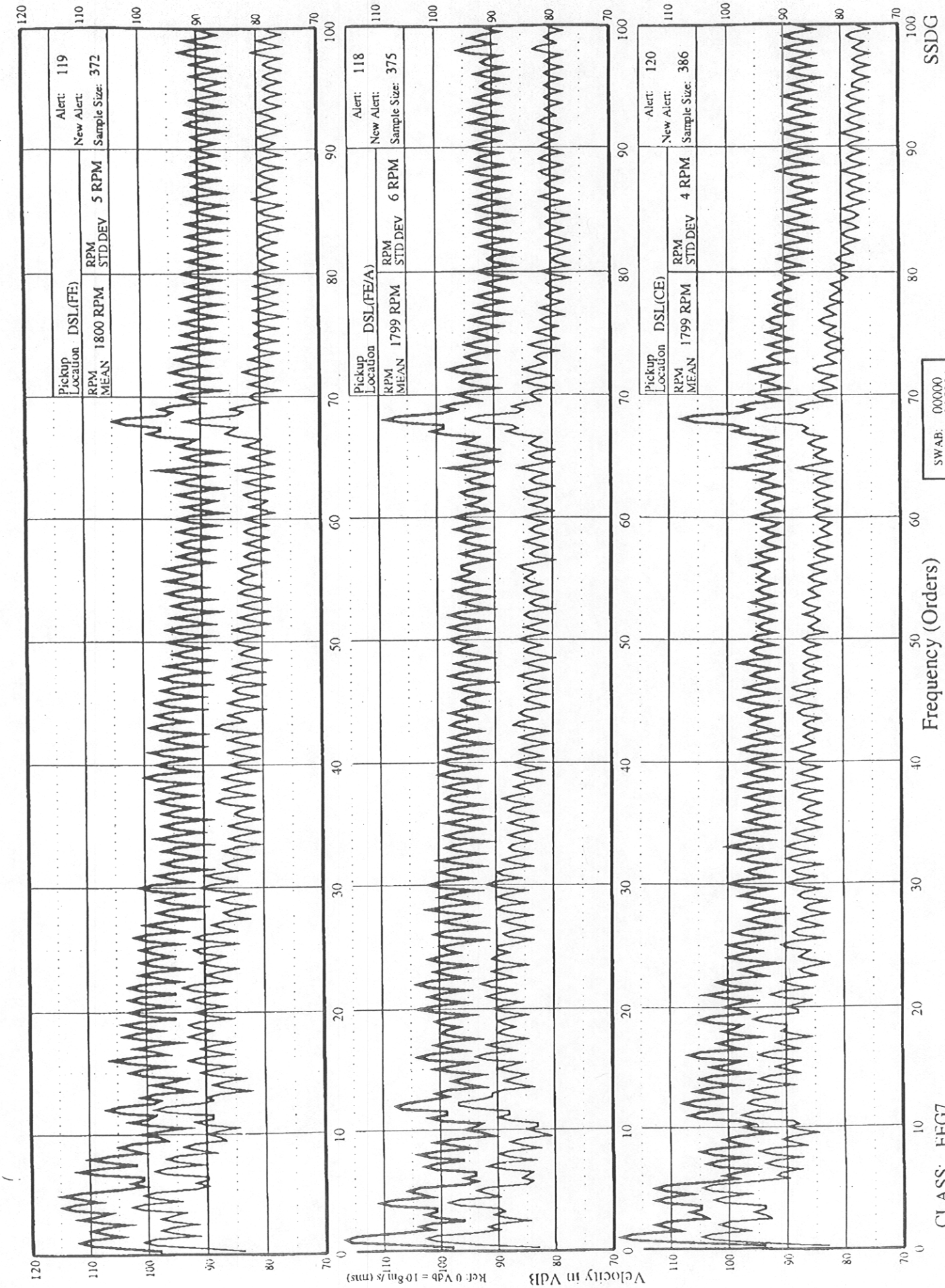
Pickup Location DSL(FE)
RPM MEAN 1800 RPM
RPM STD DEV 5 RPM
Alert: 119
New Alert:
Sample Size: 372
Pickup Location DSL(FE/A)
RPM MEAN 1799 RPM
RPM STD DEV 6 RPM
Alert: 118
New Alert:
Sample Size: 375
Pickup Location DSL(CE)
RPM MEAN 1799 RPM
RPM STD DEV 4 RPM
Alert: 120
New Alert:
Sample Size: 386
SWAB: 00000
MID: 205004
PID:
Velocity in Vdb
Ref: 0 Vdb = 10-6in/s (mts)
Frequency (Orders)
NAVSSES
Philadelphia PA 19112-5083
NARROW BAND AVERAGE
m + 2s
m
CLASS: FFG7
LOGREV: 2-MAY-97
SSDG
PAGE: 9B

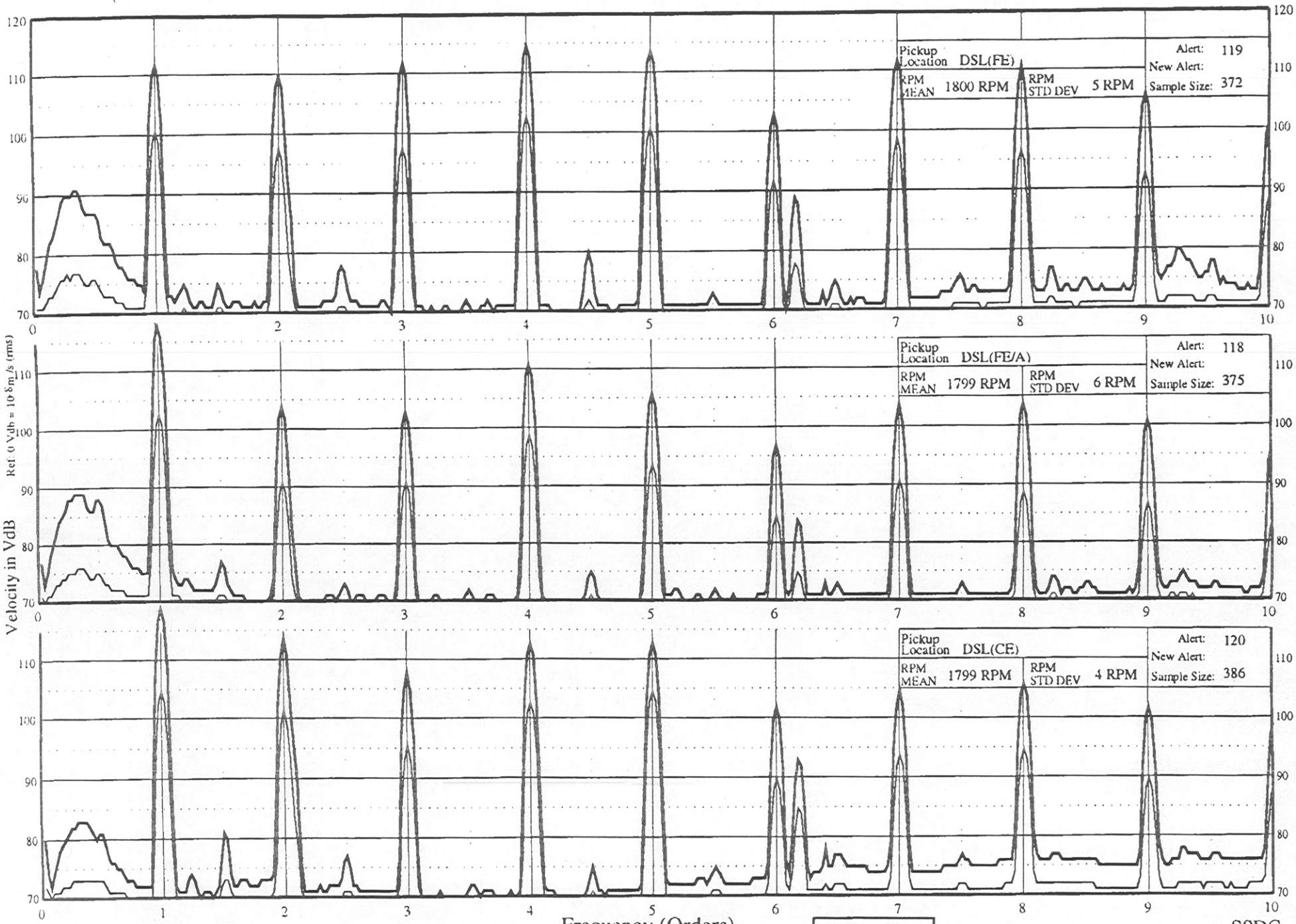

CLASS: FFG7

LOGREV: 2-MAY-97

NAVSSES
Philadelphia PA 19112-5083

SWAB: 00000
MID: 205004
PID:

SSDG

PAGE: 9A