SOLICITATION/CONTRACT/ORDER FOR COMMERCIAL ITEMS

OFFEROR TO COMPLETE BLOCKS 12, 17, 23, 24, & 30

1. REQUISITION NUMBER: 36110 53365306

2. CONTRACT NO.

3. AWARD/EFFECTIVE DATE

4. ORDER NUMBER

5. SOLICITATION NUMBER: N00167-06-Q-0004

6. SOLICITATION ISSUE DATE: 06-JAN-30

7. FOR SOLICITATION INFORMATION CALL:

a. NAME: ASSIGNMENT POINT

b. TELEPHONE NUMBER (No Collect Calls): 301-227-1113
301-227- (FAX)

8. OFFER DUE DATE/ LOCAL TIME: 06-MAR-03/ 0300 PM

9. ISSUED BY CODE N00167

CONTRACTING OFFICER
NSWC CARDEROCK DIVISION
9500 MACARTHUR BLVD.
W BETHESDA MD 20817-5700

ATTN: ASSIGNMENT POINT 301-227-1113

10. THIS ACQUISITION IS

- [ ] UNRESTRICTED
- [ ] SET ASIDE: % FOR
  - [ ] SMALL BUSINESS
  - [ ] SMALL DISADV. BUSINESS
  - [ ] 8(A)

SIC:
SIZE STANDARD:

11. DELIVERY FOR FOB DESTINATION UNLESS BLOCK IS MARKED

- [X] SEE SCHEDULE

12. DISCOUNT TERMS

13a. THIS CONTRACT IS A RATED ORDER UNDER DPAS (15 CFR 700)

- [ ]

13b. RATING

14. METHOD OF SOLICITATION

- [ ] RFQ
- [ ] IFB
- [ ] RFP

15. DELIVER TO CODE N00167

RECEIVING OFFICER
NAVAL SURFACE WARFARE CENTER
9500 MACARTHUR BLVD
W BETHESDA MD 20817-5700
ATTN: RECEIVING CODE 3341 BLDG 143

16. ADMINISTERED BY CODE N00167

-

17a. CONTRACTOR/ OFFEROR CODE

FACILITY CODE

-

TELEPHONE NO. - -

- [ ] 17b. CHECK IF REMITTANCE IS DIFFERENT AND PUT SUCH ADDRESS IN OFFER

18a. PAYMENT WILL BE MADE BY CODE

-

18b. SUBMIT INVOICES TO ADDRESS SHOWN IN BLOCK 18a UNLESS BLOCK BELOW IS CHECKED

- [X] SEE ADDENDUM

19. ITEM NO.	20. SCHEDULE OF SUPPLIES/SERVICES	21. QUANTITY	22. UNIT	23. UNIT PRICE	24. AMOUNT
0001	REQN. NO. 36110 /53365306 ITEM NAME: KITCHEN EQUIPMENT AND INSTALLATION IN ACCORDANCE WITH THE FOLLOWING STATEMENT OF WORK " THIS SOLICITATION IS ISSUED (Attach Additional Sheets as Necessary)	1	LT		

25. ACCOUNTING AND APPROPRIATION DATA

26. TOTAL AWARD AMOUNT (For Govt. Use Only)

X

- [ ] 27a. SOLICITATION INCORPORATES BY REFERENCE FAR 52.212-1, 52.212-4. FAR 52.212-3, AND 52.212-5 ARE ATTACHED. ADDENDA [ ] ARE [ ] ARE NOT ATTACHED.
- [ ] 27b. CONTRACT/PURCHASE ORDER INCORPORATES BY REFERENCE FAR 52.212-4. FAR 52.212-5 IS ATTACHED. ADDENDA [ ] ARE [ ] ARE NOT ATTACHED.

28. CONTRACTOR IS REQUIRED TO SIGN THIS DOCUMENT AND RETURN _____ COPIES TO ISSUING OFFICE. CONTRACTOR AGREES TO FURNISH AND DELIVER ALL ITEMS SET FORTH OR OTHERWISE IDENTIFIED ABOVE AND ON ANY ADDITIONAL SHEETS SUBJECT TO THE TERMS AND CONDITIONS SPECIFIED HEREIN.

29. AWARD OF CONTRACT: REFERENCE _____ OFFER DATED _____. YOUR OFFER ON SOLICITATION (BLOCK 5). INCLUDING ANY ADDITIONS OR CHANGES WHICH ARE SET FORTH HEREIN, IS ACCEPTED AS TO ITEMS:

30a. SIGNATURE OF OFFEROR/CONTRACTOR

31a. UNITED STATES OF AMERICA (SIGNATURE OF CONTRACTING OFFICER)

30b. NAME AND TITLE OF SIGNER (TYPE OR PRINT)

30c. DATE SIGNED

31b. NAME OF CONTRACTING OFFICER (TYPE OR PRINT)

31c. DATE SIGNED

32a. QUANTITY IN COLUMN 21 HAS BEEN

- [ ] RECEIVED
- [ ] INSPECTED
- [ ] ACCEPTED, AND CONFORMS TO THE CONTRACT, EXCEPT AS NOTED

32b. SIGNATURE OF AUTHORIZED GOVT. REPRESENTATIVE

32c. DATE

33. SHIP NUMBER

- [ ] PARTIAL
- [ ] FINAL

34. VOUCHER NUMBER

35. AMOUNT VERIFIED CORRECT FOR

36. PAYMENT

- [ ] COMPLETE
- [ ] PARTIAL
- [ ] FINAL

37. CHECK NUMBER

38. S/R ACCOUNT NUMBER

39. S/R VOUCHER NUMBER

40. PAID BY

41a. I CERTIFY THIS ACCOUNT IS CORRECT AND PROPER FOR PAYMENT

41b. SIGNATURE AND TITLE OF CERTIFYING OFFICER

41c. DATE

42a. RECEIVED BY (Print)

42b. RECEIVED AT (Location)

42c. DATE REC'D (YY/MM/DD)

42d. TOTAL CONTAINERS

VENDOR:

SECTION B SUPPLIES/SERVICES

ITEM	SUPPLIES/SERVICES	QUANTITY	UI	U-PRICE	AMOUNT
	USING SIMPLIFIED ACQUISITION PROCEDURES FOR THE ACQUISITION OF COMMERCIAL ITEMS IN ACCORDANCE WITH SUBPART 13.5 OF THE FEDERAL ACQUISITION REGULATION.				

VENDOR:

SECTION F TIME OF DELIVERY

DELIVERIES SHALL BE IN ACCORDANCE WITH THE FOLLOWING SPECIFICATIONS

ITEM	QUANTITY	DELIVERY REQUIRED
0001	1 LT	06-JUL-30

52.212-4 CONTRACT TERMS AND CONDITIONS--COMMERCIAL ITEMS (SEP 2005)

(a) Inspection/Acceptance. The Contractor shall only tender for acceptance those items that conform to the requirements of this contract. The Government reserves the right to inspect or test any supplies or services that have been tendered for acceptance. The Government may require repair or replacement of nonconforming supplies or reperformance of nonconforming services at no increase in contract price. The Government must exercise its post-acceptance rights--(1) Within a reasonable time after the defect was discovered or should have been discovered; and (2) Before any substantial change occurs in the condition of the item, unless the change is due to the defect in the item.

(b) Assignment. The Contractor or its assignee may assign its rights to receive payment due as a result of performance of this contract to a bank, trust company, or other financing institution, including any Federal lending agency in accordance with the Assignment of Claims Act (31 U.S.C. 3727). However, when a third party makes payment (e.g., use of the Governmentwide commercial purchase card), the Contractor may not assign its rights to receive payment under this contract.

(c) Changes. Changes in the terms and conditions of this contract may be made only by written agreement of the parties.

(d) Disputes. This contract is subject to the Contract Disputes Act of 1978, as amended (41 U.S.C. 601-613). Failure of the parties to this contract to reach agreement on any request for equitable adjustment, claim, appeal or action arising under or relating to this contract shall be a dispute to be resolved in accordance with the clause at FAR 52.233-1, Disputes, which is incorporated herein by reference. The Contractor shall proceed diligently with performance of this contract, pending final resolution of any dispute arising under the contract.

(e) Definitions. The clause at FAR 52.202-1, Definitions, is incorporated herein by reference.

(f) Excusable delays. The Contractor shall be liable for default unless nonperformance is caused by an occurrence Beyond the reasonable control of the Contractor and without its fault or negligence such as, acts of God or the public enemy, acts of the Government in either its sovereign or contractual capacity, fires, floods, epidemics, quarantine restrictions, strikes, unusually severe weather, and delays of common carriers. The Contractor shall notify the Contracting Officer in writing as soon as it is reasonably possible after the commencement of any excusable delay, setting forth the full particulars in connection therewith, shall remedy such occurrence with all reasonable dispatch, and shall promptly give written notice to the Contracting Officer of the

VENDOR:

cessation of such occurrence.

(g) Invoice. (1) The Contractor shall submit an original invoice and three copies (or electronic invoice, if authorized,) to the address designated in the contract to receive invoices. An invoice must include--

(i) Name and address of the Contractor;

(ii) Invoice date and number;

(iii) Contract number, contract line item number and, if applicable, the order number;

(iv) Description, quantity, unit of measure, unit price and extended price of the items delivered;

(v) Shipping number and date of shipment including the bill of lading number and weight of shipment if shipped on Government bill of lading;

(vi) Terms of any discount for prompt payment offered;

(vii) Name and address of official to whom payment is to be sent;

(viii) Name, title, and phone number of person to notify in event of defective invoice; and

(ix) Taxpayer Identification Number (TIN). The Contractor shall include its TIN on the invoice only if required elsewhere in this contract.

(x) Electronic funds transfer (EFT) banking information.

(A) The Contractor shall include EFT banking information on the invoice only if required elsewhere in this contract.

(B) If EFT banking information is not required to be on the invoice, in order for the invoice to be a proper invoice, the Contractor shall have submitted correct EFT banking information in accordance with the applicable solicitation provision, contract clause (e.g., 52.232-33, Payment by Electronic Funds Transfer Central Contractor Registration, or 52.232-34, Payment by Electronic Funds Transfer Other Than Central Contractor Registration), or applicable agency procedures.

(C) EFT banking information is not required if the Government waived the requirement to pay by EFT.

(2) Invoices will be handled in accordance with the Prompt Payment Act (31 U.S.C. 3903) and Office of Management and Budget (OMB) prompt payment regulations at 5 CFR part 1315.

(h) Patent indemnity. The Contractor shall indemnify the Government and its officers, employees and agents against liability, including costs, for actual or alleged direct or contributory infringement of, or inducement to infringe, any United States or foreign patent, trademark or copyright, arising out of the performance of this contract, provided the Contractor is reasonably notified of such claims and proceedings.

(i) Payment. (1) Items accepted. Payment shall be made for items accepted by the Government that have been delivered to the delivery destinations set forth in this contract.

(2) Prompt payment. The Government will make payment in accordance with the Prompt Payment Act (31 U.S.C. 3903) and prompt payment regulations at 5 CFR part 1315.

(3) Electronic Funds Transfer (EFT). If the Government makes payment by EFT, see 52.212-5(b) for the appropriate EFT clause.

(4) Discount. In connection with any discount offered for early payment, time shall be computed from the date of the invoice. For the purpose of computing the discount earned, payment shall be considered to have been made on the date which appears on the payment check or the specified payment date if an electronic funds transfer payment is made.

(5) Overpayments. If the Contractor becomes aware of a

VENDOR:

duplicate contract financing or invoice payment or that the Government has otherwise overpaid on a contract financing or invoice payment, the Contractor shall immediately notify the Contracting Officer and request instructions for disposition of the overpayment.

(j) Risk of loss. Unless the contract specifically provides otherwise, risk of loss or damage to the supplies provided under this contract shall remain with the Contractor until, and shall pass to the Government upon:

(1) Delivery of the supplies to a carrier, if transportation is f.o.b. origin; or

(2) Delivery of the supplies to the Government at the destination specified in the contract, if transportation is f.o.b. destination.

(k) Taxes. The contract price includes all applicable Federal, State, and local taxes and duties.

(l) Termination for the Government's convenience. The Government reserves the right to terminate this contract, or any part hereof, for its sole convenience. In the event of such termination, the Contractor shall immediately stop all work hereunder and shall immediately cause any and all of its suppliers and subcontractors to cease work. Subject to the terms of this contract, the Contractor shall be paid a percentage of the contract price reflecting the percentage of the work performed prior to the notice of termination, plus reasonable charges the Contractor can demonstrate to the satisfaction of the Government using its standard record keeping system, have resulted from the termination. The Contractor shall not be required to comply with the cost accounting standards or contract cost principles for this purpose. This paragraph does not give the Government any right to audit the Contractor's records. The Contractor shall not be paid for any work performed or costs incurred which reasonably could have been avoided.

(m) Termination for cause. The Government may terminate this contract, or any part hereof, for cause in the event of any default by the Contractor, or if the Contractor fails to comply with any contract terms and conditions, or fails to provide the Government, upon request, with adequate assurances of future performance. In the event of termination for cause, the Government shall not be liable to the Contractor for any amount for supplies or services not accepted, and the Contractor shall be liable to the Government for any and all rights and remedies provided by law. If it is determined that the Government improperly terminated this contract for default, such termination shall be deemed a termination for convenience.

(n) Title. Unless specified elsewhere in this contract, title to items furnished under this contract shall pass to the Government upon acceptance, regardless of when or where the Government takes physical possession.

(o) Warranty. The Contractor warrants and implies that the items delivered hereunder are merchantable and fit for use for the particular purpose described in this contract.

(p) Limitation of liability. Except as otherwise provided by an express warranty, the Contractor will not be liable to the Government for consequential damages resulting from any defect or deficiencies in accepted items.

(q) Other compliances. The Contractor shall comply with all applicable Federal, State and local laws, executive orders, rules and regulations applicable to its performance under this contract.

(r) Compliance with laws unique to Government contracts. The Contractor agrees to comply with 31 U.S.C. 1352 relating to limitations on the use of appropriated funds to influence certain Federal contracts; 18 U.S.C. 431 relating to officials not to

VENDOR:

benefit; 40 U.S.C. 3701, et seq., Contract Work Hours and Safety Standards Act; 41 U.S.C. 51-58, Anti-Kickback Act of 1986; 41 U.S.C. 265 and 10 U.S.C. 2409 relating to whistleblower protections; 49 U.S.C. 40118, Fly American; and 41 U.S.C. 423 relating to procurement integrity.

(s) Order of precedence. Any inconsistencies in this solicitation or contract shall be resolved by giving precedence in the following order:

(1) The schedule of supplies/services.

(2) The Assignments, Disputes, Payments, Invoice, Other Compliances, and Compliance with Laws Unique to Government Contracts paragraphs of this clause.

(3) The clause at 52.212-5.

(4) Addenda to this solicitation or contract, including any license agreements for computer software.

(5) Solicitation provisions if this is a solicitation.

(6) Other paragraphs of this clause.

(7) The Standard Form 1449.

(8) Other documents, exhibits, and attachments.

(9) The specification.

(t) Central Contractor Registration (CCR). (1) Unless exempted by an addendum to this contract, the Contractor is responsible during performance and through final payment of any contract for the accuracy and completeness of the data within the CCR database, and for any liability resulting from the Government's reliance on inaccurate or incomplete data. To remain registered in the CCR database after the initial registration, the Contractor is required to review and update on an annual basis from the date of initial registration or subsequent updates its information in the CCR database to ensure it is current, accurate and complete. Updating information in the CCR does not alter the terms and conditions of this contract and is not a substitute for a properly executed contractual document.

(2)(i) If a Contractor has legally changed its business name, "doing business as" name, or division name (whichever is shown on the contract), or has transferred the assets used in performing the contract, but has not completed the necessary requirements regarding novation and change-of-name agreements in FAR subpart 42.12, the Contractor shall provide the responsible Contracting Officer a minimum of one business day's written notification of its intention to (A) change the name in the CCR database; (B) comply with the requirements of subpart 42.12; and (C) agree in writing to the timeline and procedures specified by the responsible Contracting Officer. The Contractor must provide with the notification sufficient documentation to support the legally changed name.

(ii) If the Contractor fails to comply with the requirements of paragraph (t)(2)(i) of this clause, or fails to perform the agreement at paragraph (t)(2)(i)(C) of this clause, and, in the absence of a properly executed novation or change-of-name agreement, the CCR information that shows the Contractor to be other than the Contractor indicated in the contract will be considered to be incorrect information within the meaning of the "Suspension of Payment" paragraph of the electronic funds transfer (EFT) clause of this contract.

(3) The Contractor shall not change the name or address for EFT payments or manual payments, as appropriate, in the CCR record to reflect an assignee for the purpose of assignment of claims (see Subpart 32.8, Assignment of Claims). Assignees shall be separately registered in the CCR database. Information provided to the Contractor's CCR record that indicates payments, including those made by EFT, to an ultimate recipient other than that Contractor will be considered to be incorrect information within

VENDOR:

the meaning of the "Suspension of payment" paragraph of the EFT clause of this contract.

(4) Offerors and Contractors may obtain information on registration and annual confirmation requirements via the internet at http://www.ccr.gov or by calling 1-888-227-2423 or 269-961-5757.

52.212-5 CONTRACT TERMS AND CONDITIONS REQUIRED TO IMPLEMENT STATUTES OR EXECUTIVE ORDERS--COMMERCIAL ITEMS (SEP 2005)

(a) The Contractor shall comply with the following Federal Acquisition Regulation (FAR) clauses, which are incorporated in this contract by reference, to implement provisions of law or Executive orders applicable to acquisitions of commercial items:

(1) 52.233-3, Protest After Award (AUG 1996) (31 U.S.C. 3553).

(2) 52.233-4, Applicable Law for Breach of Contract Claim (OCT 2004) (Pub. L. 108-77, 108-78)

(b) The Contractor shall comply with the FAR clauses in this paragraph (b) that the Contracting Officer has indicated as being incorporated in this contract by reference to implement provisions of law or Executive orders applicable to acquisitions of commercial items: [Contracting Officer check as appropriate.]

✓ (1) 52.203-6, Restrictions on Subcontractor Sales to the Government (JUL 1995), with Alternate I (OCT 1995) (41 U.S.C. 253g and 10 U.S.C. 2402).

___ (2) 52.219-3, Notice of Total HUBZone Set-Aside (JAN 1999) (15 U.S.C. 657a).

___ (3) 52.219-4, Notice of Price Evaluation Preference for HUBZone Small Business Concerns (Jul 2005) (if the offeror elects to waive the preference, it shall so indicate in its offer) (15 U.S.C. 657a).

___ (4) (i) 52.219-5, Very Small Business Set-Aside (JUNE 2003) (Pub. L. 103-403, section 304, Small Business Reauthorization and Amendments Act of 1994).

___ (ii) Alternate I (MAR 1999) of 52.219-5.

___ (iii) Alternate II (JUNE 2003) of 52.219-5.

___ (5) (i) 52.219-6, Notice of Total Small Business Set-Aside (JUNE 2003) (15 U.S.C. 644).

___ (ii) Alternate I (OCT 1995) of 52.219-6.

___ (iii) Alternate II (MAR 2004) of 52.219-6.

___ (6) (i) 52.219-7, Notice of Partial Small Business Set-Aside (JUNE 2003) (15 U.S.C. 644).

___ (ii) Alternate I (OCT 1995) of 52.219-7.

___ (iii) Alternate II (MAR 2004) of 52.219-7.

___ (7) 52.219-8, Utilization of Small Business Concerns (MAY 2004) (15 U.S.C. 637 (d)(2) and (3)).

___ (8) (i) 52.219-9, Small Business Subcontracting Plan (JUL 2005) (15 U.S.C. 637(d)(4)).

___ (ii) Alternate I (OCT 2001) of 52.219-9.

___ (iii) Alternate II (OCT 2001) of 52.219-9.

___ (9) 52.219-14, Limitations on Subcontracting (DEC 1996) (15 U.S.C. 637(a)(14)).

___ (10) (i) 52.219-23, Notice of Price Evaluation Adjustment for Small Disadvantaged Business Concerns (SEP 2005) (10 U.S.C. 2323) (if the offeror elects to waive the adjustment, it shall so indicate in its offer).

___ (ii) Alternate I (JUNE 2003) of 52.219-23.

___ (11) 52.219-25, Small Disadvantaged Business Participation Program--Disadvantaged Status and Reporting (OCT 1999) (Pub. L. 103-355, section 7102, and 10 U.S.C. 2323).

___ (12) 52.219-26, Small Disadvantaged Business Participation Program--Incentive Subcontracting (OCT 2000) (Pub. L. 103-355, section 7102, and 10 U.S.C. 2323).

___ (13) 52.219-27, Notice of Total Service-Disabled Veteran-

VENDOR:

Owned Small Business Set-Aside (MAY 2004)
___ (14) 52.222-3, Convict Labor (JUNE 2003) (E.O. 11755).
___ (15) 52.222-19, Child Labor--Cooperation with Authorities and Remedies (JUN 2004) (E.O. 13126).
___ (16) 52.222-21, Prohibition of Segregated Facilities (FEB 1999).
✓ (17) 52.222-26, Equal Opportunity (APR 2002) (E.O. 11246).
___ (18) 52.222-35, Equal Opportunity for Special Disabled Veterans, Veterans of the Vietnam Era, and Other Eligible Veterans (DEC 2001) (38 U.S.C. 4212).
___ (19) 52.222-36, Affirmative Action for Workers with Disabilities (JUN 1998) (29 U.S.C. 793).
___ (20) 52.222-37, Employment Reports on Special Disabled Veterans, Veterans of the Vietnam Era, and Other Eligible Veterans (DEC 2001) (38 U.S.C. 4212).
___ (21) 52.222-39, Notification of Employee Rights Concerning Payment of Union Dues or Fees (DEC 2004) (E.O. 13201).
___ (22) (i) 52.223-9, Estimate of Percentage of Recovered Material Content for EPA-Designated Products (AUG 2000) (42 U.S.C. 6962(c)(3)(A)(ii)).
___ (ii) Alternate I (AUG 2000) of 52.223-9 (42 U.S.C. 6962(i)(2)(C)).
___ (23) 52.225-1, Buy American Act--Supplies (JUNE 2003) (41 U.S.C. 10a-10d).
___ (24) (i) 52.225-3, Buy American Act--Free Trade Agreements--Israeli Trade Act (Jan 2005) (41 U.S.C. 10a-10d, 19 U.S.C. 3301 note, 19 U.S.C. 2112 note, Pub. L. 108-77, 108-78, 108-286).
___ (ii) Alternate I (JAN 2004) of 52.225-3.
___ (iii) Alternate II (JAN 2004) of 52.225-3.
___ (25) 52.225-5, Trade Agreements (Jan 2005) (19 U.S.C. 2501, et seq., 19 U.S.C. 3301 note).
___ (26) 52.225-13, Restrictions on Certain Foreign Purchases (MAR 2005) (E.o.s, proclamations, and statutes administered by the Office of Foreign Assets Control of the Department of the Treasury).
___ (27) 52.225-15, Sanctioned European Union Country End Products (FEB 2000) (E.O. 12849).
___ (28) 52.225-16, Sanctioned European Union Country Services (FEB 2000) (E.O. 12849).
___ (29) 52.232-29, Terms for Financing of Purchases of Commercial Items (FEB 2002) (41 U.S.C. 255(f), 10 U.S.C. 2307(f)).
___ (30) 52.232-30, Installment Payments for Commercial Items (OCT 1995) (41 U.S.C. 255(f), 10 U.S.C. 2307(f)).
✓ (31) 52.232-33, Payment by Electronic Funds Transfer--Central Contractor Registration (OCT 2003) (31 U.S.C. 3332).
___ (32) 52.232-34, Payment by Electronic Funds Transfer--Other than Central Contractor Registration (MAY 1999) (31 U.S.C. 3332).
___ (33) 52.232-36, Payment by Third Party (MAY 1999) (31 U.S.C. 3332).
___ (34) 52.239-1, Privacy or Security Safeguards (AUG 1996) (5 U.S.C. 552a).
___ (35) (i) 52.247-64, Preference for Privately Owned U.S.-Flag Commercial Vessels (APR 2003) (46 U.S.C. Appx 1241 and 10 U.S.C. 2631).
___ (ii) Alternate I (APR 2003) of 52.247-64.

___ (c) The Contractor shall comply with the FAR clauses in this paragraph (c), applicable to commercial services, that the Contracting Officer has indicated as being incorporated in this contract by reference to implement provisions of law or Executive

VENDOR:

orders applicable to acquisitions of commercial items:
[Contracting Officer check as appropriate.]

✓ (1) 52.222-41, Service Contract Act of 1965, as Amended (JUL 2005) (41 U.S.C. 351, et seq.).

___ (2) 52.222-42, Statement of Equivalent Rates for Federal Hires (MAY 1989) (29 U.S.C. 206 and 41 U.S.C. 351, et seq.).

___ (3) 52.222-43, Fair Labor Standards Act and Service Contract Act--Price Adjustment (Multiple Year and Option Contracts) (MAY 1989) (29 U.S.C. 206 and 41 U.S.C. 351, et seq.).

___ (4) 52.222-44, Fair Labor Standards Act and Service Contract Act--Price Adjustment (February 2002) (29 U.S.C. 206 and 41 U.S.C. 351, et seq.).

___ (5) 52.222-47, SCA Minimum Wages and Fringe Benefits Applicable to Successor Contract Pursuant to Predecessor Contractor Collective Bargaining Agreements (CBA) (May 1989) (41 U.S.C. 351, et seq.).

(d) Comptroller General Examination of Record. The Contractor shall comply with the provisions of this paragraph (d) if this contract was awarded using other than sealed bid, is in excess of the simplified acquisition threshold, and does not contain the clause at 52.215-2, Audit and Records--Negotiation.

(1) The Comptroller General of the United States, or an authorized representative of the Comptroller General, shall have access to and right to examine any of the Contractor's directly pertinent records involving transactions related to this contract.

(2) The Contractor shall make available at its offices at all reasonable times the records, materials, and other evidence for examination, audit, or reproduction, until 3 years after final payment under this contract or for any shorter period specified in FAR Subpart 4.7, Contractor Records Retention, of the other clauses of this contract. If this contract is completely or partially terminated, the records relating to the work terminated shall be made available for 3 years after any resulting final termination settlement. Records relating to appeals under the disputes clause or to litigation or the settlement of claims arising under or relating to this contract shall be made available until such appeals, litigation, or claims are finally resolved.

(3) As used in this clause, records include books, documents, accounting procedures and practices, and other data, regardless of type and regardless of form. This does not require the Contractor to create or maintain any record that the Contractor does not maintain in the ordinary course of business or pursuant to a provision of law.

(e)(1) Notwithstanding the requirements of the clauses in paragraphs (a), (b), (c), and (d) of this clause, the Contractor is not required to flow down any FAR clause, other than those in paragraphs (i) through (vi) of this paragraph in a subcontract for commercial items. Unless otherwise indicated below, the extent of the flow down shall be as required by the clause--

(i) 52.219-8, Utilization of Small Business Concerns (May 2004) (15 U.S.C. 637(d)(2) and (3)), in all subcontracts that offer further subcontracting opportunities. If the subcontract (except subcontracts to small business concerns) exceeds $500,000 ($1,000,000 for construction of any public facility), the subcontractor must include 52.219-8 in lower tier subcontracts that offer subcontracting opportunities.

(ii) 52.222-26, Equal Opportunity (April 2002) (E.O. 11246).

(iii) 52.222-35, Equal Opportunity for Special Disabled

VENDOR:

Veterans, Veterans of the Vietnam Era, and Other Eligible Veterans (December 2001) (38 U.S.C. 4212).
(iv) 52.222-36, Affirmative Action for Workers with Disabilities (June 1998) (29 U.S.C. 793).
(v) 52.222-39, Notification of Employee Rights Concerning Payment of Union Dues or Fees (DEC 2004) (E.O. 13201).
(vi) 52.222-41, Service Contract Act of 1965, as Amended (JUL 2005), flow down required for all subcontracts subject to the Service Contract Act of 1965 (41 U.S.C. 351, et seq.).
(vii) 52.247-64, Preference for Privately Owned U.S.-Flag Commercial Vessels (April 2003) (46 U.S.C. Appx 1241 and 10 U.S.C. 2631). Flow down required in accordance with paragraph (d) of FAR clause 52.247-64.
(2) While not required, the contractor May include in its subcontracts for commercial items a minimal number of additional clauses necessary to satisfy its contractual obligations.

252.212-7001 CONTRACT TERMS AND CONDITIONS REQUIRED TO IMPLEMENT STATUTES OR EXECUTIVE ORDERS APPLICABLE TO DEFENSE ACQUISITIONS OF COMMERCIAL ITEMS (SEP 2005)

(a) The contractor agrees to comply with the following Federal Acquisition Regulation (FAR) clause which, if checked, is included in this contract by reference to implement a provision of law applicable to acquisitions of commercial items or components.

✓ 52.203-3 Gratuities (APR 1984) (10 U.S.C. 2207)

(b) The Contractor agrees to comply with any clause that is checked on the following list of Defense FAR Supplement clauses which, if checked, is included in this contract by reference to implement provisions of law or Executive orders applicable to acquisitions of commercial items or components.

___ 252.205-7000 Provision of Information to Cooperative Agreement Holders (DEC 1991) (10 U.S.C. 2416).
___ 252.219-7003 Small Disadvantaged and Women-Owned Small Business Subcontracting Plan (DoD Contracts) (APR 1996) (15 U.S.C. 637).
___ 252.219-7004 Small, Small Disadvantaged and Women-Owned Small Business Subcontracting Plan (Test Program) (JUN 1997) (15 U.S.C. 637 Note).
___ 252.225-7001 Buy American Act and Balance of Payments Program (JUN 2005) (41 U.S.C. 10a-10d, E.O. 10582).
___ 252.225-7012 Preference for Certain Domestic Commodities (JUN 2004) (10 U.S.C. 2533a).
___ 252.225-7014 Preference for Domestic Specialty Metals (JUN 2005) (10 U.S.C. 2533a).
___ 252.225-7015 Restriction on Acquisition of Hand or Measuring Tools (JUN 2005) (10 U.S.C. 2533a).
___ 252.225-7016 Restriction on Acquisition of Ball and Roller Bearings (JUN 2005) (___ Alternate I) (APR 2003) (10 U.S.C. 2534 and Section 8099 of Pub. L. 104-61) and similar sections in subsequent DoD appropriations acts).
___ 252.225-7021 Trade Agreements (JUN 2005) (19 U.S.C. 2501-2518 and 19 U.S.C. 3301 note).
___ 252.225-7027 Restriction on Contingent Fees for Foreign Military Sales (APR 2003) (22 U.S.C. 2779).
___ 252.225-7028 Exclusionary Policies and Practices of Foreign Governments (APR 2003) (22 U.S.C. 2755).
___ 252.225-7036 Buy American Act--Free Trade Agreements--Balance of Payments Program (JUN 2005) (___ Alternate I)

VENDOR:

(JAN 2005) (41 U.S.C. 10a-10d and 19 U.S.C. 3301 note).
___ 252.225-7038 Restriction on Acquisition of Air Circuit Breakers (JUN 2005) (10 U.S.C. 2534(a)(3)).
___ 252.226-7001 Utilization of Indian Organizations, Indian-Owned Economic Enterprises, and Native Hawaiian Small Business Concerns (SEP 2004) (Section 8021 of Pub. L. 107-248 and similar sections in subsequent DoD appropriations acts).
✓ 252.227-7015 Technical Data--Commercial Items (NOV 1995) (10 U.S.C. 2320).
✓ 252.227-7037 Validation of Restrictive Markings on Technical Data (SEP 1999) (10 U.S.C. 2321).
___ 252.232-7003 Electronic Submission of Payment Requests (JAN 2004) (10 U.S.C. 2227)
___ 252.237-7019 Training for Contractor Personnel Interacting with Detainees (SEP 2005) (Sectioon 1092 of Pub. L. 108-375).
___ 252.243-7002 Requests for Equitable Adjustment (MAR 1998) (10 U.S.C. 2410).
___ 252.247-7023 Transportation of Supplies by Sea (MAY 2002) (____Alternate I) (MAR 2000) (____Alternate II) (MAR 2000) (Alternate III) (MAY 2002) (10 U.S.C. 2631).
___ 252.247-7024 Notification of Transportation of Supplies by Sea (MAR 2000) (10 U.S.C. 2631).

(c) In addition to the clauses listed in paragraph (e) of the Contract Terms and Conditions Required to Implement Statutes or Executive Orders--Commercial Items clause of this contract (FAR 52.212-5), the Contractor shall include the terms of the following clauses, if applicable, in subcontracts for commercial items or commercial components, awarded at any tier under this contract:

252.225-7014 Preference for Domestic Specialty Metals, Alternate I (APR 2003) (10 U.S.C. 2533a).
252.237-7019 Training for Contractor Personnel Interacting with Detainees (SEP 2005) (Section 1092 of Pub. L. 108-375).
252.247-7023 Transportation of Supplies by Sea (MAY 2002) (10 U.S.C. 2631)
252.247-7024 Notification of Transportation of Supplies by Sea (MAR 2000) (10 U.S.C. 2631).

52.212-1 INSTRUCTIONS TO OFFERORS--COMMERCIAL ITEMS (JAN 2005)

(a) North American Industry Classification System (NAICS) code and small business size standard. The NAICS code and small business size standard for this acquisition appear in Block 10 of the solicitation cover sheet (SF 1449). However, the small business size standard for a concern which submits an offer in its own name, but which proposes to furnish an item which it did not itself manufacture, is 500 employees.

(b) Submission of offers. Submit signed and dated offers to the office specified in this solicitation at or before the exact time specified in this solicitation. Offers may be submitted on the SF 1449, letterhead stationery, or as otherwise specified in the solicitation. As a minimum, offers must show--

(1) The solicitation number;

(2) The time specified in the solicitation for receipt of offers;

(3) The name, address, and telephone number of the offeror;

(4) A technical description of the items being offered in sufficient detail to evaluate compliance with the requirements

VENDOR:

in the solicitation. This may include product literature, or other documents, if necessary;

(5) Terms of any express warranty;

(6) Price and any discount terms;

(7) "Remit to" address, if different than mailing address;

(8) A completed copy of the representations and certifications at FAR 52.212-3 (see FAR 52.212-3(j) for those representations and certifications that the offeror shall complete electronically);

(9) Acknowledgment of Solicitation Amendments;

(10) Past performance information, when included as an evaluation factor, to include recent and relevant contracts for the same or similar items and other references (including contract numbers, points of contact with telephone numbers and other relevant information); and

(11) If the offer is not submitted on the SF 1449, include a statement specifying the extent of agreement with all terms, conditions, and provisions included in the solicitation. Offers that fail to furnish required representations or information, or reject the terms and conditions of the solicitation may be excluded from consideration.

(c) Period for acceptance of offers. The offeror agrees to hold the prices in its offer firm for 30 calendar days from the date specified for receipt of offers, unless another time period is specified in an addendum to the solicitation.

(d) Product samples. When required by the solicitation, product samples shall be submitted at or prior to the time specified for receipt of offers. Unless otherwise specified in this solicitation, these samples shall be submitted at no expense to the Government, and returned at the sender's request and expense, unless they are destroyed during preaward testing.

(e) Multiple offers. Offerors are encouraged to submit multiple offers presenting alternative terms and conditions or commercial items for satisfying the requirements of this solicitation. Each offer submitted will be evaluated separately.

(f) Late submissions, modifications, revisions, and withdrawals of offers. (1) Offerors are responsible for submitting offers, and any modifications, revisions, or withdrawals, so as to reach the Government office designated in the solicitation by the time specified in the solicitation. If no time is specified in the solicitation, the time for receipt is 4:30 p.m., local time, for the designated Government office on the date that offers or revisions are due.

(2)(i) Any offer, modification, revision, or withdrawal of an offer received at the Government office designated in the solicitation after the exact time specified for receipt of offers is "late" and will not be considered unless it is received before award is made, the Contracting Officer determines that accepting the late offer would not unduly delay the acquisition; and--

(A) If it was transmitted through an electronic commerce method authorized by the solicitation, it was received at the initial point of entry to the Government infrastructure not later than 5:00 p.m. one working day prior to the date specified for receipt of offers; or

(B) There is acceptable evidence to establish that it was received at the Government installation designated for receipt of offers and was under the Government's control prior to the time set for receipt of offers; or

(C) If this solicitation is a request for proposals,

VENDOR:

it was the only proposal received.

(ii) However, a late modification of an otherwise successful offer, that makes its terms more favorable to the Government, will be considered at any time it is received and may be accepted.

(3) Acceptable evidence to establish the time of receipt at the Government installation includes the time/date stamp of that installation on the offer wrapper, other documentary evidence of receipt maintained by the installation, or oral testimony or statements of Government personnel.

(4) If an emergency or unanticipated event interrupts normal Government processes so that offers cannot be received at the Government office designated for receipt of offers by the exact time specified in the solicitation, and urgent Government requirements preclude amendment of the solicitation or other notice of an extension of the closing date, the time specified for receipt of offers will be deemed to be extended to the same time of day specified in the solicitation on the first work day on which normal Government processes resume.

(5) Offers may be withdrawn by written notice received at any time before the exact time set for receipt of offers. Oral offers in response to oral solicitations may be withdrawn orally. If the solicitation authorizes facsimile offers, offers may be withdrawn via facsimile received at any time before the exact time set for receipt of offers, subject to the conditions specified in the solicitation concerning facsimile offers. An offer may be withdrawn in person by an offeror or its authorized representative if, before the exact time set for receipt of offers, the identity of the person requesting withdrawal is established and the person signs a receipt for the offer.

(g) Contract award (not applicable to Invitation for Bids). The Government intends to evaluate offers and award a contract without discussions with offerors. Therefore, the offeror's initial offer should contain the offeror's best terms from a price and technical standpoint. However, the Government reserves the right to conduct discussions if later determined by the Contracting Officer to be necessary. The Government may reject any or all offers if such action is in the public interest; accept other than the lowest offer; and waive informalities and minor irregularities in offers received.

(h) Multiple awards. The Government may accept any item or group of items of an offer, unless the offeror qualifies the offer by specific limitations. Unless otherwise provided in the Schedule, offers may not be submitted for quantities less than those specified. The Government reserves the right to make an award on any item for a quantity less than the quantity offered, at the unit prices offered, unless the offeror specifies otherwise in the offer.

(i) Availability of requirements documents cited in the solicitation. (1)(i) The GSA Index of Federal Specifications, Standards and Commercial Item Descriptions, FPMR Part 101-29, and copies of specifications, standards, and commercial item descriptions cited in this solicitation may be obtained for a fee by submitting a request to--

GSA Federal Supply Service Specifications Section
Suite 8100
470 East L'Enfant Plaza, SW
Washington, DC 20407

Telephone (202) 619-8925
Facsimile (202) 619-8978.

VENDOR:

(ii) If the General Services Administration, Department of Agriculture, or Department of Veterans Affairs issued this solicitation, a single copy of specifications, standards, and commercial item descriptions cited in this solicitation may be obtained free of charge by submitting a request to the addressee in paragraph (i)(1)(i) of this provision. Additional copies will be issued for a fee.

(2) The DoD Index of Specifications and Standards (DoDISS) and documents listed in it may be obtained from the--

Department of Defense Single Stock Point (DoDSSP)
Building 4, Section D
700 Robbins Avenue
Philadelphia, PA 19111-5094

Telephone (215) 697-2667/2179
Facsimile (215) 697-1462.

(i) Automatic distribution may be obtained on a subscription basis.

(ii) Order forms, pricing information, and customer support information may be obtained--

(A) By telephone at (215) 697-2667/2179; or

(B) Through the DoDSSP Internet site at http://dodssp.daps.mil.

(3) Nongovernment (voluntary) standards must be obtained from the organization responsible for their preparation, publication, or maintenance.

(j) Data Universal Numbering System (DUNS) Number. (Applies to all offers exceeding $25,000, and offers of $25,000 or less if the solicitation requires the Contractor to be registered in the Central Contractor Registration (CCR) database. The offeror shall enter, in the block with its name and address on the cover page of its offer, the annotation "DUNS" or "DUNS +4" followed by the DUNS or DUNS +4 number that identifies the offeror's name and address. The DUNS +4 is the DUNS number plus a 4-character suffix that may be assigned at the discretion of the offeror to establish additional CCR records for identifying alternative Electronic Funds Transfer (EFT) accounts (see FAR Subpart 32.11) for the same parent concern. If the offeror does not have a DUNS number, it should contact Dun and Bradstreet directly to obtain one. An offeror within the United States may contact Dun and Bradstreet by calling 1-866-705-5711 or via the internet at http://www.dnb.com. An offeror located outside the United States must contact the local Dun and Bradstreet office for a DUNS number.

(k) Central Contractor Registration. Unless exempted by an addendum to this solicitation, by submission of an offer, the offeror acknowledges the requirement that a prospective awardee shall be registered in the CCR database prior to award, during performance and through final payment of any contract resulting from this solicitation. If the Offeror does not become registered in the CCR database in the time prescribed by the Contracting Officer, the Contracting Officer will proceed to award to the next otherwise successful registered Offeror. Offerors may obtain information on registration and annual confirmation requirements via the Internet at http://www.ccr.gov or by calling 1-888-227-2423 or 269-961-5757.

(l) Debriefing. If a post-award debriefing is given to requesting offerors, the Government shall disclose the following information, if applicable:

(1) The agency's evaluation of the significant weak or

VENDOR:

deficient factors in the debriefed offeror's offer.
(2) The overall evaluated cost or price and technical rating of the successful and the debriefed offeror and past performance information on the debriefed offeror.
(3) The overall ranking of all offerors, when any ranking was developed by the agency during source selection.
(4) A summary of the rationale for award;
(5) For acquisitions of commercial items, the make and model of the item to be delivered by the successful offeror.
(6) Reasonable responses to relevant questions posed by the debriefed offeror as to whether source-selection procedures set forth in the solicitation, applicable regulations, and other applicable authorities were followed by the agency.

52.212-3 OFFEROR REPRESENTATIONS AND CERTIFICATIONS-COMMERCIAL ITEMS (MAR 2005)--ALTERNATE I (APR 2002)

An offeror shall complete only paragraph (j) of this provision if the offeror has completed the annual representations and certifications electronically at http://orca.bpn.gov. If an offeror has not completed the annual representations and certifications electronically at the ORCA website, the offeror shall complete only paragraphs (b) through (i) of this provision.
(a) Definitions. As used in this provision:
"Emerging small business" means a small business concern whose size is no greater than 50 percent of the numerical size standard for the NAICS code designated.
"Forced or indentured child labor" means all work or service--
(1) Exacted from any person under the age of 18 under the menace of any penalty for its nonperformance and for which the worker does not offer himself voluntarily; or
(2) Performed by any person under the age of 18 pursuant to a contract the enforcement of which can be accomplished by process or penalties.
"Service-disabled veteran-owned small business concern"--
(1) Means a small business concern--
(i) Not less than 51 percent of which is owned by one or more service--disabled veterans or, in the case of any publicly owned business, not less than 51 percent of the stock of which is owned by one or more service-disabled veterans; and
(ii) The management and daily business operations of which are controlled by one or more service-disabled veterans or, in the case of a service-disabled veteran with permanent and severe disability, the spouse or permanent caregiver of such veteran.
(2) Service-disabled veteran means a veteran, as defined in 38 U.S.C. 101(2), with a disability that is service-connected, as defined in 38 U.S.C. 101(16).
"Small business concern" means a concern, including its affiliates, that is independently owned and operated, not dominant in the field of operation in which it is bidding on Government contracts, and qualified as a small business under the criteria in 13 CFR part 121 and size standards in this solicitation.
"Veteran-owned small business concern" means a small business concern--
(1) Not less than 51 percent of which is owned by one or more veterans (as defined at 38 U.S.C. 101(2)) or, in the case of any publicly owned business, not less than 51 percent of the stock of which is owned by one or more veterans; and
(2) The management and daily business operations of which

VENDOR:

are controlled by one or more veterans.

"Women-owned small business concern" means a small business concern--

(1) That is at least 51 percent owned by one or more women; or, in the case of any publicly owned business, at least 51 percent of the stock of which is owned by one or more women; and

(2) Whose management and daily business operations are controlled by one or more women.

"Women-owned business concern" means a concern which is at least 51 percent owned by one or more women; or in the case of any publicly owned business, at least 51 percent of its stock is owned by one or more women; and whose management and daily business operations are controlled by one or more women.

(b) Taxpayer Identification Number (TIN) (26 U.S.C. 6109, 31 U.S.C. 7701). (Not applicable if the offeror is required to provide this information to a central contractor registration database to be eligible for award.)

(1) All offerors must submit the information required in paragraphs (b)(3) through (b)(5) of this provision to comply with debt collection requirements of 31 U.S.C. 7701(c) and 3325(d), reporting requirements of 26 U.S.C. 6041, 6041A, and 6050M, and implementing regulations issued by the Internal Revenue Service (IRS).

(2) The TIN may be used by the Government to collect and report on any delinquent amounts arising out of the offeror's relationship with the Government (31 U.S.C. 7701(c)(3)). If the resulting contract is subject to the payment reporting requirements described in FAR 4.904, the TIN provided hereunder may be matched with IRS records to verify the accuracy of the offeror's TIN.

(3) Taxpayer Identification Number (TIN).

[ ] TIN: _____.
[ ] TIN has been applied for.
[ ] TIN is not required because:
[ ] Offeror is a nonresident alien, foreign corporation, or foreign partnership that does not have income effectively connected with the conduct of a trade or business in the United States and does not have an office or place of business or a fiscal paying agent in the United States;
[ ] Offeror is an agency or instrumentality of a foreign government;
[ ] Offeror is an agency or instrumentality of the Federal Government.

(4) Type of organization.
[ ] Sole proprietorship;
[ ] Partnership;
[ ] Corporate entity (not tax-exempt);
[ ] Corporate entity (tax-exempt);
[ ] Government entity (Federal, State, or local);
[ ] Foreign government;
[ ] International organization per 26 CFR 1.6049-4;
[ ] Other _____.

(5) Common parent.
[ ] Offeror is not owned or controlled by a common parent;
[ ] Name and TIN of common parent:
Name _____.
TIN _____.

(c) Offerors must complete the following representations when the resulting contract will be performed in the United States or its outlying areas. Check all that apply.

VENDOR:

(1) Small business concern. The offeror represents as part of its offer that it [ ] is, [ ] is not a small business concern.

(2) Veteran-owned small business concern. [Complete only if the offeror represented itself as a small business concern in paragraph (c)(1) of this provision.] The offeror represents as part of its offer that it [ ] is, [ ] is not a veteran-owned small business concern.

(3) Service-disabled veteran-owned small business concern. [Complete only if the offeror represented itself as a veteran-owned small business concern in paragraph (c)(2) of this provision.] The offeror represents as part of its offer that it [ ] is, [ ] is not a service-disabled veteran-owned small business concern.

(4) Small disadvantaged business concern. [Complete only if the offeror represented itself as a small business concern in paragraph (c)(1) of this provision.] The offeror represents, for general statistical purposes, that it [ ] is, [ ] is not a small disadvantaged business concern as defined in 13 CFR 124.1002.

(5) Women-owned small business concern. [Complete only if the offeror represented itself as a small business concern in paragraph (c)(1) of this provision.] The offeror represents that it [ ] is, [ ] is not a women-owned small business concern. Note: Complete paragraphs (c)(6) and (c)(7) only if this solicitation is expected to exceed the simplified acquisition threshold.

(6) Women-owned business concern (other than small business concern). [Complete only if the offeror is a women-owned business concern and did not represent itself as a small business concern in paragraph (c)(1) of this provision.] The offeror represents that it [ ] is a women-owned business concern.

(7) Tie bid priority for labor surplus area concerns. If this is an invitation for bid, small business offerors may identify the labor surplus areas in which costs to be incurred on account of manufacturing or production (by offeror or first-tier subcontractors) amount to more than 50 percent of the contract price:

_____

(8) Small Business Size for the Small Business Competitiveness Demonstration Program and for the Targeted Industry Categories under the Small Business Competitiveness Demonstration Program. [Complete only if the offeror has represented itself to be a small business concern under the size standards for this solicitation.]

(i) (Complete only for solicitations indicated in an addendum as being set-aside for emerging small businesses in one of the designated industry groups (DIGs).) The offeror represents as part of its offer that it [ ] is, [ ] is not an emerging small business.

(ii) (Complete only for solicitations indicated in an addendum as being for one of the targeted industry categories (TICs) or designated industry groups (DIGs).) Offeror represents as follows:

(A) Offeror's number of employees for the past 12 months (check the Employees column if size standard stated in the solicitation is expressed in terms of number of employees); or

(B) Offeror's average annual gross revenue for the last 3 fiscal years (check the Average Annual Gross Number of Revenues column if size standard stated in the solicitation is expressed in terms of annual receipts).

(Check one of the following):

VENDOR:

Number of Employees	Average Annual Gross Revenues
____ 50 or fewer	____ $1 million or less
____ 51--100	____ $1,000,001--$2 million
____ 101--250	____ $2,000,001--$3.5 million
____ 251--500	____ $3,500,001--$5 million
____ 501--750	____ $5,000,001--$10 million
____ 751--1,000	____ $10,000,001--$17 million
____ Over 1,000	____ Over $17 million

(9) (Complete only if the solicitation contains the clause at FAR 52.219-23, Notice of Price Evaluation Adjustment for Small Disadvantaged Business Concerns, or FAR 52.219-25, Small Disadvantaged Business Participation Program--Disadvantaged Status and Reporting, and the offeror desires a benefit based on its disadvantaged status.)

(i) General. The offeror represents that either--

(A) It [ ] is, [ ] is not certified by the Small Business Administration as a small disadvantaged business concern and identified, on the date of this representation, as a certified small disadvantaged business concern in the database maintained by the Small Business Administration (PRO-Net), and that no material change in disadvantaged ownership and control has occurred since its certification, and, where the concern is owned by one or more individuals claiming disadvantaged status, the net worth of each individual upon whom the certification is based does not exceed $750,000 after taking into account the applicable exclusions set forth at 13 CFR 124.104(c)(2); or

(B) It [ ] has, [ ] has not submitted a completed application to the Small Business Administration or a Private Certifier to be certified as a small disadvantaged business concern in accordance with 13 CFR 124, Subpart B, and a decision on that application is pending, and that no material change in disadvantaged ownership and control has occurred since its application was submitted.

(ii) [ ] Joint Ventures under the Price Evaluation Adjustment for Small Disadvantaged Business Concerns. The offeror represents, as part of its offer, that it is a joint venture that complies with the requirements in 13 CFR 124.1002(f) and that the representation in paragraph (c)(9)(i) of this provision is accurate for the small disadvantaged business concern that is participating in the joint venture. [The offeror shall enter the name of the small disadvantaged business concern that is participating in the joint venture: _____.]

(10) HUBZone small business concern. [Complete only if the offeror represented itself as a small business concern in paragraph (c)(1) of this provision.] The offeror represents, as part of its offer, that--

(i) It [ ] is, [ ] is not a HUBZone small business concern listed, on the date of this representation, on the List of Qualified HUBZone Small Business Concerns maintained by the Small Business Administration, and no material change in ownership and control, principal office, or HUBZone employee percentage has occurred since it was certified by the Small Business Administration in accordance with 13 CFR part 126; and

(ii) It [ ] is, [ ] is not a joint venture that complies with the requirements of 13 CFR part 126, and the representation in paragraph (c)(10)(i) of this provision is accurate for the HUBZone small business concern or concerns that are participating in the joint venture. [The offeror shall enter the name or names of the HUBZone small business concern or concerns that are

VENDOR:

participating in the joint venture:_____.] Each HUBZone small business concern participating in the joint venture shall submit a separate signed copy of the HUBZone representation.

(11) (Complete if the offeror has represented itself as disadvantaged in paragraph (c)(4) or (c)(9) of this provision.) The offeror shall check the category in which its ownership falls:

____ Black American.

____ Hispanic American.

____ Native American (American Indians, Eskimos, Aleuts, or Native Hawaiians).

____ Asian-Pacific American (persons with origins from Burma, Thailand, Malaysia, Indonesia, Singapore, Brunei, Japan, China, Taiwan, Laos, Cambodia (Kampuchea), Vietnam, Korea, The Philippines, U.S. Trust Territory or the Pacific Islands (Republic of Palau), Republic of the Marshall Islands, Federated States of Micronesia, the Commonwealth of the Northern Mariana Islands, Guam, Samoa, Macao, Hong Kong, Fiji, Tonga, Kiribati, Tuvalu, or Nauru).

____ Subcontinent Asian (Asian-Indian) American (persons with origins from India, Pakistan, Bangladesh, Sri Lanka, Bhutan, the Maldives Islands, or Nepal).

____ Individual/concern, other than one of the preceding.

(11) HUBZone small business concern. [Complete only if the offeror represented itself as a small business concern in paragraph (c)(1) of this provision.] The offeror represents as part of its offer that-

(i) It [ ] is, [ ] is not a HUBZone small business concern listed, on the date of this representation, on the List of Qualified HUBZone Small Business Concerns Maintained by the Small Business Administration, and no material change in ownership and control, principal place of ownership, or HUBZone employee percentage has occurred since it was certified by the Small Business Administration in accordance with 13 CFR part 126; and

(ii) It [ ] is, [ ] is not a joint venture that complies with the requirements of 13 CFR part 126, and the representation in paragraph (c)(11)(i) of this provision is accurate for the HUBZone small business concern or concerns that are participating on the joint venture. [The offeror shall enter the name or names of the HUBZone small business concern or concerns that are participating in the joint venture: _____.] Each HUBZone small business concern participating in the joint venture shall submit a separate signed copy of the HUBZone representation.

(d) Representations required to implement provisions of Executive Order 11246--

(1) Previous contracts and compliance. The offeror represents that--

(i) It [ ] has, [ ] has not participated in a previous contract or subcontract subject to the Equal Opportunity clause of this solicitation; and

(ii) It [ ] has, [ ] has not filed all required compliance reports.

(2) Affirmative Action Compliance. The offeror represents that--

(i) It [ ] has developed and has on file, [ ] has not developed and does not have on file, at each establishment, affirmative action programs required by rules and regulations of the Secretary of Labor (41 CFR parts 60-1 and 60-2), or

(ii) It [ ] has not previously had contracts subject to the written affirmative action programs requirement of the rules and regulations of the Secretary of Labor.

VENDOR:

(e) Certification Regarding Payments to Influence Federal Transactions (31 U.S.C. 1352). (Applies only if the contract is expected to exceed $100,000.) By submission of its offer, the offeror certifies to the best of its knowledge and belief that no Federal appropriated funds have been paid or will be paid to any person for influencing or attempting to influence an officer or employee of any agency, a Member of Congress, an officer or employee of Congress or an employee of a Member of Congress on his or her behalf in connection with the award of any resultant contract.

(f) Buy American Act Certificate. (Applies only if the clause at Federal Acquisition Regulation (FAR) 52.225-1, Buy American Act--Supplies, is included in this solicitation.)

(1) The offeror certifies that each end product, except those listed in paragraph (f)(2) of this provision, is a domestic end product and that the offeror has considered components of unknown origin to have been mined, produced, or manufactured outside the United States. The offeror shall list as foreign end products those end products manufactured in the United States that do not qualify as domestic end products. The terms "component," "domestic end product," "end product," "foreign end product," and "United States" are defined in the clause of this solicitation entitled "Buy American Act--Supplies."

(2) Foreign End Products:

Line Item No	Country of Origin
_____	_____
_____	_____
_____	_____

(List as necessary)

(3) The Government will evaluate offers in accordance with the policies and procedures of FAR Part 25.

(g)(1) Buy American Act--Free Trade Agreements--Israeli Trade Act Program Certificate. (Applies only if the clause at FAR 52.225-3, Buy American Act--Free Trade Agreements--Israeli Trade Act, is included in this solicitation.)

(i) The offeror certifies that each end product, except those listed in paragraph (g)(1)(ii) or (g)(1)(iii) of this provision, is a domestic end product and that the offeror has considered components of unknown origin to have been mined, produced, or manufactured outside the United States. The terms "component," "domestic end product," "end product," "foreign end product," and "United States" are defined in the clause of this solicitation entitled "Buy American Act--Free Trade Agreements--Israeli Trade Act."

(ii) The offeror certifies that the following supplies are end products of Australia, Canada, Chile, Mexico, or Singapore, or Israeli end products as defined in the clause of this solicitation entitled "Buy American Act--Free Trade Agreements--Israeli Trade Act":

End Products of Australia, Canada, Chile, Mexico, or Singapore or Israeli End Products:

Line Item No	Country of Origin
_____	_____
_____	_____
_____	_____

(List as necessary)

(iii) The offeror shall list those supplies that are foreign end products (other than those listed in paragraph (g)(1)(ii) of

VENDOR:

this provision) as defined in the clause of this solicitation entitled "Buy American Act--Free Trade Agreements--Israeli Trade Act." The offeror shall list as other foreign end products those end products manufactured in the United States that do not qualify as domestic end products.

Other Foreign End Products:

Line Item No	Country of Origin
_____	_____
_____	_____
_____	_____

(List as necessary)

(iv) The Government will evaluate offers in accordance with the policies and procedures of FAR Part 25.

(2) Buy American Act--Free Trade Agreements--Israeli Trade Act Certificate, Alternate I (Jan 2004). If Alternate I to the clause at FAR 52.225-3 is included in this solicitation, substitute the following paragraph (g)(1)(ii) for paragraph (g)(1)(ii) of the basic provision:

(g)(1)(ii) The offeror certifies that the following supplies are Canadian end products as defined in the clause of this solicitation entitled "Buy American Act--Free Trade Agreements--Israeli Trade Act":

Canadian End Products:

Line Item No.

_____

_____

_____

(List as necessary)

(3) Buy American Act--Free Trade Agreements--Israeli Trade Act Certificate, Alternate II (Jan 2004). If Alternate II to the clause at FAR 52.225-3 is included in this solicitation, substitute the following paragraph (g)(1)(ii) for paragraph (g)(1)(ii) of the basic provision:

(g)(1)(ii) The offeror certifies that the following supplies are Canadian end products or Israeli end products as defined in the clause of this solicitation entitled "Buy American Act--Free Trade Agreements--Israeli Trade Act":

Canadian or Israeli End Products:

Line Item No	Country of Origin
_____	_____
_____	_____
_____	_____

(List as necessary)

(4) Trade Agreements Certificate. (Applies only if the clause at FAR 52.225-5, Trade Agreements, is included in this solicitation.)

(i) The offeror certifies that each end product, except those listed in paragraph (g)(4)(ii) of this provision, is a U.S.-made or designated country end product, as defined in the clause of this solicitation entitled "Trade Agreements."

(ii) The offeror shall list as other end products those end products that are not U.S.-made or designated country end products.

Other End Products:

VENDOR:

Line Item No	Country of Origin
_____	_____
_____	_____
_____	_____

(List as necessary)

(iii) The Government will evaluate offers in accordance with the policies and procedures of FAR Part 25. For line items covered by the WTO GPA, the Government will evaluate offers of U.S.-made or designated country end products without regard to the restrictions of the Buy American Act. The Government will consider for award only offers of U.S.-made or designated country end products unless the Contracting Officer determines that there are no offers for such products or that the offers for such products are insufficient to fulfill the requirements of the solicitation.

(h) Certification Regarding Debarment, Suspension or Ineligibility for Award (Executive Order 12549). (Applies only if the contract value is expected to exceed the simplified acquisition threshold.) The offeror certifies, to the best of its knowledge and belief, that the offeror and/or any of its principals--

(1) [ ] Are, [ ] are not presently debarred, suspended, proposed for debarment, or declared ineligible for the award of contracts by any Federal agency;

(2) [ ] Have, [ ] have not, within a three-year period preceding this offer, been convicted of or had a civil judgment rendered against them for: commission of fraud or a criminal offense in connection with obtaining, attempting to obtain, or performing a Federal, state or local government contract or subcontract; violation of Federal or state antitrust statutes relating to the submission of offers; or commission of embezzlement, theft, forgery, bribery, falsification or destruction of records, making false statements, tax evasion, or receiving stolen property; and

(3) [ ] Are, [ ] are not presently indicted for, or otherwise criminally or civilly charged by a Government entity with, commission of any of these offenses.

(i) Certification Regarding Knowledge of Child Labor for Listed End Products (Executive Order 13126). [The Contracting Officer must list in paragraph (i)(1) any end products being acquired under this solicitation that are included in the List of Products Requiring Contractor Certification as to Forced or Indentured Child Labor, unless excluded at 22.1503(b).]

(1) Listed end products.

Listed End Product

_____

_____

Listed Countries of Origin

_____

_____

(2) Certification. [If the Contracting Officer has identified end products and countries of origin in paragraph (i)(1) of this provision, then the offeror must certify to either (i)(2)(i) or (i)(2)(ii) by checking the appropriate block.]

[ ] (i) The offeror will not supply any end product listed in paragraph (i)(1) of this provision that was mined, produced, or manufactured in the corresponding country as listed for that product.

[ ] (ii) The offeror may supply an end product listed in paragraph (i)(1) of this provision that was mined, produced, or

VENDOR:

manufactured in the corresponding country as listed for that product. The offeror certifies that it has made a good faith effort to determine whether forced or indentured child labor was used to mine, produce, or manufacture any such end product furnished under this contract. On the basis of those efforts, the offeror certifies that it is not aware of any such use of child labor.

(j)(1) Annual Representations and Certifications. Any changes provided by the offeror in paragraph (j) of this provision do not automatically change the representations and certifications posted on the Online Representations and Certifications Application (ORCA) website.

(2) The offeror has completed the annual representations and certifications electronically via the ORCA website at http://orca.bpn.gov. After reviewing the ORCA database information, the offeror verifies by submission of this offer that the representations and certifications currently posted electronically at FAR 52.212-3, Offeror Representations and Certifications--Commercial Items, have been entered or updated in the last 12 months, are current, accurate, complete, and applicable to this solicitation (including the business size standard applicable to the NAICS code referenced for this solicitation), as of the date of this offer and are incorporated in this offer by reference (see FAR 4.1201), except for paragraphs _____.

[Offeror to identify the applicable paragraphs at (b) through (i) of this provision that the offeror has completed for the purposes of this solicitation only, if any.

These amended representation(s) and/or certification(s) are also incorporated in this offer and are current, accurate, and complete as of the date of this offer.

Any changes provided by the offeror are applicable to this solicitation only, and do not result in an update to the representations and certifications posted on ORCA.]

(End of provision)

52.237-1 -- Site Visit.

Site Visit (Apr 1984)

Offerors or quoters are urged and expected to inspect the site where services are to be performed and to satisfy themselves regarding all general and local conditions that may affect the cost of contract performance, to the extent that the information is reasonably obtainable. In no event shall failure to inspect the site constitute grounds for a claim after contract award.

(End of Provision)

52.237-2 -- Protection of Government Buildings, Equipment, and Vegetation.

Protection of Government Buildings, Equipment, and Vegetation (Apr 1984)

The Contractor shall use reasonable care to avoid damaging existing buildings, equipment, and vegetation on the Government installation. If the Contractor's failure to use reasonable care causes damage to any of this property, the Contractor shall replace or repair the damage at no expense to the Government as the Contracting Officer directs. If the Contractor fails or refuses to make such repair or replacement, the Contractor shall be liable for the cost, which may be deducted from the contract price.

(End of Clause)

PART 1 - GENERAL

1.1 REFERENCES

A. The publications listed below form a part of this specification to the extent referenced. The publications are referred to in the text by the basic designation only.

AMERICAN NATIONAL STANDARDS INSTITUTE (ANSI)
ANSI B16.18 (1984; R 1994) Cast Copper Alloy Solder Joint Pressure Fittings

AMERICAN SOCIETY OF HEATING, REFRIGERATING AND AIR-CONDITIONING ENGINEERS (ASHRAE)
ASHRAE 15 (1994; Errata 1994) Safety Code for Mechanical Refrigeration

ASME INTERNATIONAL (ASME)
ASME A112.19.3M (1987; R 1996) Stainless Steel Plumbing Fixtures (Designed for Residential Use)

ASME B16.15 (1985; R 1994) Cast Bronze Threaded Fittings Classes 125 and 250

ASME B16.22 (1995) Wrought Copper and Copper Alloy Solder Joint Pressure Fittings

ASME B16.26 (1988) Cast Copper Alloy Fittings for Flared Copper Tubes

AMERICAN SOCIETY FOR TESTING AND MATERIALS (ASTM)
ASTM A 36/A 36M (1997; Rev. A) Carbon Structural Steel

ASTM A 167 (1996) Stainless and Heat-Resisting Chromium-Nickel Steel Plate, Sheet, and Strip

ASTM A 270 (1995; Rev. A) Seamless and Welded Austenitic Stainless Steel Sanitary Tubing

ASTM A 276 (1998; Rev. A) Stainless Steel Bars and Shapes

ASTM A 653/A 653M (1998) Steel Sheet, Zinc Coated (Galvanized) or Zinc-Iron Alloy-Coated (Galvannealed) by the Hot-Dip Process

ASTM B 32 (1996) Solder Metal

ASTM B 43 (1996) Seamless Red Brass Pipe, Standard Sizes

ASTM B 88M (1996) Seamless Copper Water Tube (Metric)

AMERICAN WELDING SOCIETY (AWS)
AWS A5.8 (1992) Filler Metals for Brazing and Braze Welding

NATIONAL ELECTRICAL MANUFACTURERS ASSOCIATION (NEMA)
NEMA ICS 2 (1993) Industrial Control and Systems Controllers, Contactors and Overload Relays, Rated Not More Than 2000 Volts AC or 750 Volts DC

NEMA LD 3 (1995) High-Pressure Decorative Laminates

NEMA MG 1 (1993; Rev. 1-4) Motors and Generators

NSF INTERNATIONAL (NSF)
NSF 2 (1996) Food Equipment

NSF 35 (1991) Laminated Plastics for Surfacing Food Service Equipment

SHEET METAL & AIR CONDITIONING CONTRACTORS' NATIONAL ASSOCIATION (SMACNA)
SMACNA KEFG (1990) Kitchen Equipment Fabrication Guidelines

1.2 Submittal Requirements

A. The food service contractor who will be procuring and installing the kitchen equipment shall be know as KEC. The KEC shall submit, within 30 days of award of contract, fabrication drawings for food service equipment not manufactured as standard production and catalog items by manufacturers of commercial food equipment, referenced as "custom fabricated equipment" in this specification. Draw custom fabricated equipment at a minimum 1:20 scale and include a plan view and front, rear, and side elevations. Fully dimension drawings and label all parts as to materials and methods of construction. Prior to fabrication of custom fabricated equipment, KEC shall submit color selections to the owner.

B. AWARD WILL BE MADE TO THE CONTRACTOR WHOS PROPOSAL REPRESENTS THE LOWEST COST TECHNICALLY ACCEPTABLE OFFER.

C. AS PART OF THIS REQUIREMENT, PROSPECTIVE OFFERORS WILL BE REQUIRED TO MAKE A PRELIMINARY SITE VISIT PRIOR TO SUBMITAL OF PROPOSALS/OFFER.

D. POINTS OF CONTACT

Technical : Mr. Don Yee 301-227-1248 donald.yee@navy.mil

Contractual: Mr. Brian White 301-227-1867 brian.d.white@navy.mil

PART 2 – GENERAL REQUIREMENTS

2.1 Installation -
The kitchen and serving areas utilities and space requirements shall be field verified prior to installation. The included drawings in the kitchen equipment RFQ are design drawings, which were completed prior to building construction. They are close approximation and can not be considered exact drawings.

2.2 Utility Service Requirements – Electrical

A. The KEC shall furnish all self-contained equipment completely interwired to a single point of connection near the rough-in point indicated on the rough-in plan. Fabricated items shall have service extended to junction boxes mounted on equipment where accessible and non-obstructive. Electrical receptacles mounted on fabricated equipment

shall be provided mounted and pre-wired to a junction box by the KEC. All pre-wiring in custom-fabricated equipment shall be tagged for easy identification on the site, including equipment item number, rough-in stub number, and power characteristics.

B. Manufactured components mounting into assemblies may require the KEC to connect directly from field stubs to wiring or terminal blocks provided by the manufacturer. KEC shall provide all required conduit, wiring, and fittings.

C. KEC shall confirm the power availability of all new kitchen equipment in this contract.

D. Final connection of all equipment to field stubs shall be by the KEC.

E. The KEC shall replace plugs and receptacles, if required, for new equipment.

F. The KEC shall install or mount, and wire all controls and heating elements shipped loose with equipment. KEC shall make final connection of the completed equipment to the utility rough-ins providing all non-scheduled materials required. Final assemblies shall conform to all aspects of the project standards for quality and workmanship.

G. All electrically heated equipment shall be provided with pilot lights, thermostats, and junction boxes for final connection. Heating elements and controls shall be accessible for connection and replacement, and shall be of such manufacture as to be readily available in the jobsite locality.

H. All wiring shall be concealed and conducted in only rigid or armored conduit. Visible conduit shall be chrome plated, steel, or SS (stainless steel) tubing. Conduit shall be secured at points of connection and intermediate points to prevent loosening with use of the equipment. Hollow steel structures may be used as conduit if wiring is provided in NEC armored cable, with proper fittings, grommets, and connectors. All wiring shall be accessible for replacement.

I. The KEC shall furnish the initial switch on each motor-driven or heated appliance.

J. All equipment shall be new, of manufacturer's most current model and production, and furnished with all standard motors, timers, cutouts, fuses, switches, and components.

K. Wiring diagrams shall be applied to motor covers or other accessible locations for reference. Motors and appliance data plates shall be legible and located where visible and accessible.

L. The KEC shall remove and repair or replace any device or assembly that exhibits excessive noises, vibration, wobble, or relay noise, static, or inconsistency that my indicate a possible manufacturing or assembly defect.

M. All electrical components shall be UL Listed and all wiring shall meet NEC and applicable project standards. Enclosures, wiring, and controls shall be consistent with the use zones in which operation is intended, such as wet working or cleaning areas, grease, or food exposure areas. The finish and composition of any materials used shall be resistant to normal industry, heavy-duty abrasion, impact, chemicals, and moisture, for the full warranty period.

N. Any cover plate shall match the material and finish to which it is applied.

O. All switches and controls shall be easily identified as to equipment controlled, and multiple switch assemblies shall have deeply engraved phenolic label nameplates permanently adhesive-applied adjacent thereto, for identification. Controls and calibrations shall be identified by molded, or abrasive or chemical-engraved area on the body metal of the equipment. The KEC shall submit a sample of the proposed identification system for Owner's approval.

P. Switches and controls shall be recessed or provided with a SS guard to prevent damage to bodies, knobs, stems, switches, lights, or labels, by carts or other traffic. Show locations on all shop drawings. All drop-in or slide-in mounted equipment components with loose controls shall be provided with NEC-Approved millwork or casework mounting bezels and wiring kits.

Q. Mounting and final connection of vendor-furnished equipment shall be by the Vendor.

2.3 Utility Service Requirement – Plumbing

A. Waste drain lines from fabricated equipment shall be conducted to drains by KEC, from drain tailpieces and wastes, or common drain manifolds with accessible hand valves on fabricated equipment.

B. All required faucets, pre-rinses, and drain fittings shall be furnished, mounted and hooked up by the KEC. Fixtures shall be of manufacturer's or fabricator’s shop standard where not specified or clarified by standard details; submit for approval by Owner. Fixtures delivered for installation, which are not approved or are deemed unacceptable by the owner, shall be replaced with units of acceptable durability, features, and parts availability.

C. Fixtures shall meet or exceed the standards of T & S Brass and Bronze Corp., Chicago Faucet Co., Standard-Keil Hardware Manufacturing Co., or Component Hardware Group. All fittings and components are subject to all provisions of the contractor's warranty.

D. The KEC shall provide suitable, accessible pipe slots and chases through equipment for placement and conducting of utility without cutting of the equipment. Any site-work performed shall be shop quality.

E. The GC shall extend utilities from rough-ins to points of connection after equipment is set in place. KEC shall seal equipment after final connection.

F. All gas-fired equipment shall be AGA-Approved and provided with 100% safety pilot lights. Any electric ignition devices or high-heat sensors shall be UL listed and AGA-Approved.

G. All steam-fired equipment shall be ASME-Approved where applicable, and provided with proper temperature/pressure relieving valves.

2.4 General and Utility Requirements – Refrigeration

A. All compressors shall be furnished by the KEC with four-year extended full replacement

warranty, and factory warranty, for a total of five years. All refrigerators and systems shall be provided with a one-year, full parts and labor warranty, with 24-hour, call-in service agency.

D. All refrigeration piping shall conform to ASRE Standard of the Board of Fire Underwriters, and all local codes.

E. The KEC shall furnish a functioning refrigeration system to provide and maintain the following temperatures:

1)	Prepared Inventory Refrigerator	+30 degrees F
2)	Under counter Refrigerator	+38 degrees F
3)	Reach-in Manufacturered Refrigerator	+35 degrees F
4)	Salad Bar or Sandwich Unit	+40 degrees F

F. KEC shall verify space requirement.

G. Pre-fabricated cabinets shall be 4" foamed-in-place polyurethane insulated, with metal interior and exterior panel surfaces as specified. Structures shall include no wood. Panel seams shall be self-gasketing, and further sealed by the KEC to eliminate all air leaks. Doors shall be self-closing, and fully gasketed. Insulation values shall be (cured) U .0295 and R 34 for 4" panels. Flame spread rating shall be NTE 25 and smoke development NTE 500.

2.5 Millwork

A. All millwork items in the foodservice work zone area shall be fabricated and installed by the KEC, who shall coordinate all work, field dimensions, and setting in of new furnished items. The Owner shall approve all shop drawings.

B. Millwork shall be fully laminated 3/4" thick, A/B exterior glue, and softwood plywood unless noted differently on the drawings. Dimension lumber framing is not acceptable. Drawer liners and backs shall be 5/8" kiln dried hardwood. All units shall have finished backs and shall be mounted without exposed fasteners.

C. Plastic laminate shall be 1/16" thick, high-pressure phenolic resin with pattern selected by Owner. Only 1/16" horizontal grade shall be used where exposed to view or wear. All exposed surfaces shall be laminated, including shelf bottoms and ends. Unexposed surfaces may be laminated with a neutral color cabinet liner. Adhesives shall be non-flammable solvent contact cement. Fasteners, splines, and alignment pins shall be minimized and not visible.

D. Fasteners used in field joints shall not be exposed, and be of non-corroding, metallic composition. All field joints shall be splined, drawn tight, and sealed with clear silicon rubber (GE 801 Hi-Heat Range). All plastic laminate patterns shall be applied to run parallel to the longest dimension of the panel. All intersecting patterns shall be mitered. Glue lines shall be trimmed and cleaned. Edges shall be beveled, and overlapped to prevent seepage of liquids between laminates and backing material.

E. All utility contractors shall cut all of their own utility routes through millwork, leaving no penetration burrs or splintering, and providing grommets. All top cutouts for installation of drop-in components shall be by the KEC. Cutouts for removable components shall be self-edged to match the panel penetrated. Fabricate all units with scribe panels for an acceptable, close fit-up.

F. KEC shall provide all NEC Millwork Approved, recessed control mounting bezels appropriate for the locations of the switches, thermostatic controls, and pilot lights of all foodservice equipment.

G. Millwork drawings by the Architect or owner are for guide purposes. The Fabricator shall submit shop drawings for approval by the Owner.

2.6 Materials

A. Stainless steel (termed SS) shall be Type 304, 18-8, chrome-nickel, extra low non-magnetic, austenitic, corrosion resisting, alloy steel. Sheets shall be all new material, flat, and free from all warps, buckles, and surface flaws and imperfections.

B. Galvanized iron (GI) shall be ARMCO or USRM iron or an approved grade of copper bearing steel, hot dip coated in pure zinc. Sheets shall be fully galvanized, and free of warps, buckles, surface blemishes, runs, checks, or oxidation. Sprayed-on coatings will be rejected (see 2.2.7.B. Finishes).

C. All metal shall be true US Standard gauge after working. Unless specifically approved in writing, no gauge less than 20 shall be incorporated into any fabrication:

10 GAUGE	0.1406"	16 GAUGE 0.0625"
12 GAUGE	0.1094"	18 GAUGE 0.0500"
14 GAUGE	0.0781"	20 GAUGE 0.0375"

D. Metals and other material found to be not in compliance with specifications or manufacturer's details shall be rejected and removed from the jobsite and replaced by approved materials meeting the General Specifications.

E. Structural steel shall consist of angles, channels, straps, bars or other shapes, galvanized, ductile in quality, and free of surface imperfections and corrosion.

F. All tubing shall be seamless, true gauge, and un-crimped, whether used for structure, support, or conduit.

G. Black iron (BI) or ferrous metal used in canopy ducting shall be minimum 16 GAUGE, fully welded at all joints and seams, and properly insulated as required by applicable code, and meet the requirements of NFPA Bulletin 96, current issue.

H. White metal (castings and components) shall consist of corrosion-resistant alloy containing not less than 30% nickel. All castings shall be rough ground, polished, and buffed to a bright lustre, free from all pits, burrs, or imperfections. Aluminum and plastic castings will be rejected.

2.7 Fabrication

A. Standard Details provided by the Consultant shall be followed closely in bidding and preparation of fabrication shop drawings. Detail plates commonly refer to other detail plates, and if the KEC discovers the absence of or conflict with any other detail plate, it shall assume to correct or clarify any missing information before progressing with any of the work.

B. All items of custom fabricated equipment shall be constructed in the same factory and shall be similar in construction details, materials, methods, and appearance to similar types of items so fabricated under this contract. All custom fabricated counters and cashier stand shall be secured to the finished floor.

C. Each item of fabricated equipment shall include all customary reinforcing, bracing, and welding with the Supplementary Details, or Custom Details. Where standard sheet sizes will permit, and all doors and drain boards shall be constructed of a single sheet of metal. Except where required to be removable, all flat surfaces shall be secured to vertical and horizontal bracing members by welding or other approved means to eliminate all buckle, warp, rattle, and wobble.

D. Suitable pipe slots shall be provided on fabricated equipment, as required, to accommodate service and utility lines and mechanical connections. These slots shall be of adequate size and shall be neatly made with turned up edges all around to eliminate cutting or defacing of equipment on the job. Cabinet bases shall be provided with an inner panel duct at the ends or rear of the cabinet allowing adequate space to conceal vertical piping. Such work, when performed at the job site, shall be of the same quality as similar work performed in the shop.

E. All exposed surfaces shall be free from bolt and screw heads. When bolts are required, they shall be machine thread of concealed type and be of similar composition as the metal to which they are applied. Where bolt or screw threads on the interior of fixtures are visible or may come into contact with hands or wiping cloths, they shall be capped with a stainless steel acorn nut and stainless steel lock washer.

F. Where screw threads are not visible or readily accessible, they shall be assembled lock washers and nuts. Wherever bolts or screws are welded to the underside of trim or tops, the reverse side of the weld shall be finished uniformly with the adjoining surfaces. Depressions at these points shall not be acceptable.

G. Rivets shall not be permitted in any location.

H. All welding shall be the heliarc method with welding rod of the same composition as the sheets or parts welded. Welds shall be complete, strong, and ductile with excess metal ground off and joints finished smooth to matching adjoining surfaces. Welds shall be free of mechanical imperfections such as gas holes, pits, cracks, etc. and shall be continuously

welded so that the fixtures shall appear as one-piece construction. Butt welds made by spot solder and finished by grinding shall not be acceptable.

1. Spot welds shall have a maximum spacing of 3". Tack welds shall be of at least 1/4" length of welding material at a maximum space of 4" from center to center. Weld spacing at the ends of the channel battens shall not exceed 2" centers. All pan corners shall be fully welded.

2. Fixtures shall be shop fabricated in one piece and shipped to the job completely assembled wherever possible. Equipment too large to transport or enter the building as one piece shall be constructed so that the field joints can be welded at the job site.

3. In no case shall soldering be considered as a replacement for welding, nor shall any soldering operation be done where dependence is placed on stability and strength of the joint or the joint is exposed to foods or moisture.

4. All exposed joints shall be ground flush with adjoining material and finished to harmonize therewith. Whenever material has sunk or been depressed by welding operation, such depression shall be suitably hammered and peened flush with the adjoining surface and finished. The grain of rough grinding shall be removed by successive fine polishing operations.

5. All unexposed welded joints on galvanized steel under-shelves of tables or counters in stainless steel construction shall be suitably coated at the factory with an approved cold galvanizing coating.

6. After galvanized steel members have been welded, all welds and areas where galvanizing has been damaged shall have a zinc dust coating applied in conformance with U.S. Government Military Specification Number MILP-26915.

I. Butt joints and contact joints, wherever they occur, shall be drawn tight and secured and shall not require a filler. Wherever breaks occur, they shall be free of undue extrudence and shall not be flaky, scaly, or cracked. Where such breaks do not mar the uniform surface appearance of the material, all such marks shall be removed by suitable grinding, polishing, and finishing. Wherever sheared edges occur, they shall be free of burrs, fins, and irregular projections and shall be finished to obviate all danger of cutting or laceration.

J. The grain of polishing shall run in the same direction on all horizontal and on all vertical surfaces of each item of fabricated equipment except in the case where the finish of the horizontal sections of each shall terminate in a mitered edge. Where sinks and adjacent drainboards are equipped with backsplashes, the grain of polishing shall be consistent in direction throughout the length of the backsplash and sink compartment.

K. Component parts, whether fabricated by KEC or purchased for building into the fabricated equipment, shall conform to the following:

Bolts, screws, nuts and washers shall be of steel with machine thread, except where brass or stainless steel is fastened, in which case they shall be of brass or stainless steel respectively. Where dissimilar metals are fastened, bolts, screws, nuts and washers shall

be of the higher grade metal. The spacing and extent of bolts and screws shall be such as to ensure suitable fastening and prevent buckling of the metals fastened. Such fasteners shall be minimized in use and concealed wherever possible.

2.8 Finishes (Finishing)

A. Stainless steel shall be polished and uniformly grained to a #4 commercial finish. Polishing grain shall run in the same direction on equipment, wherever possible, with the longer direction. All metal sheets and cutouts shall be de-burred before working, and all equipment shall have no burrs after installation. Over ground, hollow ground, or scored surfaces, seams, corners, or other features will be rejected.

B. Exposed galvanized surfaces shall not be painted. Any areas where galvanizing has been lost or damaged in working shall be recoated with ARMCO Zinc-Grip or Rust-Oleum 2185 zinc rich, self-priming, cold galvanizing coating. Remove all machine oils or foreign material before recoating or final painting if specified.

C. All equipment bodies shall be free of debris, dust, grit, oil, wraps, burrs, spelter, burns, autographs, and all shop markings to be accepted.

2.9 Workmanship

A. Each item of equipment shall be constructed in a workmanlike manner including all reinforcing, bracing, and welding or fastening, grinding, polishing, and final finishing. All work shall be of highest standards to the industry.

B. Pipe slots and chases shall be provided where needed in all fabricated equipment for use in connecting utilities. Access shall be cut by KEC and all work shall be shop quality, ground, deburred, and restored.

C. Exposed fasteners shall be minimized, used only when necessary and where approved, and shall only be type 300 SS, tight-fitting, oval head, machine thread screws or bolts, drilled and tapped, into metal of suitable gauge. Self-tapping or plated fasteners, open or aluminum rivets, or other light gauge fastening, or without proper backup support or fishplates, will be rejected.

D. Knuckle joints will be accepted where approved, in writing, but minimized, drawn tight, fastened, silicone sealed, and NSF-approved.

E. Solder, lead, Bondo, resin, or any other material except sound deadening or insulating, will be rejected.

F. All equipment shall be sealed to permanently placed adjacent equipment and dissimilar construction. Provide and install such equipment using concealed “Z-clips” or stabilizing angle attachments whether the equipment is custom fabricated or manufacturer’s standard models, and seal with clear silicone sealant. Patching of any nature will be rejected. The KEC shall provide and install equipment and assemblies with a minimum-tolerance, close, tight fit-up, per field conditions. Silicone sealed joints exceeding 1/4" at any point will be rejected. Trim is not an acceptable substitute for accuracy in sizing custom-fabricated equipment or assemblies.

G. All SS work surfaces of all equipment shall be provided with sound deadening complete fillet or coating with an NSF-approved mastic to a minimum thickness not less than 1/8" as measured at any point. Deadening tape alone is insufficient.

H. All lenses used in fabrication shall be plate glass with SS or metal guarded or protected edges. No Lexan, acrylic plastic, or other such products shall be accepted, even if components of commercially manufactured systems.

2.10 Welding

A. All welding shall join similar metals with rods of the same metal content. Welding shall be electric arc type with argon or inert gas shielding to prevent oxidation of the welds. All exposed welds shall be ground flat and re-grained to match adjacent areas.

B. Worked surfaces that are distorted shall be peened to the original level, ground, and regrained, maintaining true gauge.

C. Joints of dissimilar metals shall be termed brazed and such joints shall be by a high-heat process using copper bearing or brass composition rods in unexposed and non-food contact areas.

D. Soldering and filleting will be rejected.

E. Ductwork shall be fully welded 16 GA ferrous metal or 18 GA SS, by GC except where specified otherwise.

PART 3 - DIRECTIVES AND REQUIREMENTS

3.1 Coordination Directives

A. The KEC shall review all drawings pertaining to the project regarding condition and equipment to be furnished under this section, including access, construction, electrical, mechanical, plumbing (gas), and control systems, and details as prepared by the Consultant and all other parties to the project. The KEC shall not order any equipment until it has obtained exact dimensions for all work. The cost of correcting an oversight or premature commencement of any work shall not be charged to the Owner. The KEC shall verify, furnish and install all equipment in accordance with the site conditions and all aspects of utilities roughed-in to the foodservice areas including the kitchen.

B. The KEC shall not attach any nameplates of any nature to any equipment, except as may be provided on factory-made equipment by manufacturers. If inventory tags are made available to the KEC by the Owner, then the KEC shall so tag equipment in places requested by the Owner, and an accurate record of serial and/or model numbers matching the equipment shall be provided to the Owner, coordinated with the purchase specifications and schedule of values.

C. The KEC shall attend construction and progress meetings and conferences on a regular basis when requested to so do, and maintain a correspondence record of all matters and contacts pertaining to the project, and tender such data and documents available to the Owner upon request.

D. The KEC shall make the owner/government aware of the exact scope of work stated herein and proposed by the KEC in its bid, and fully list any and all exceptions to the Bidding Documents in its tender. Failure to submit in writing at the time of bidding any exceptions to the bidding documents will block any remedy at any time after acceptance of the Kitchen Equipment Contract.

E. The KEC shall establish and confirm the rigging and hoisting for any components to fit through the available doors, corridors, angled passageways, elevators, landings, or stairwells.

F. The KEC shall coordinate, work out, and execute all work required to complete the section work, without omission of any activities necessary for timely, accurate, and complete performance.

3.2 Special Directives

A. Channel bases for equipment shall be set in place on the structural slab for imbedded Installations, or on the finished floor for equipment setting by the KEC, then sealed if the face of the base is to be the final finish or if a finish is specified to be applied thereto.

B. Pigmented sealant will be rejected and all metals and finishes shall be cleaned with solvent before any sealants are applied to assure bonding. Extruded sealant shall be cut away and cleaned with solvent. Sealing shall be done after equipment has been connected and started up. Installation and silicone bonds are subject to all tenets of the warranty.

C. Mounting and final connection of vendor-furnished equipment is not in kitchen contract.

D. KEC shall coordinate with other trades on the site to assure that equipment, finishes, aluminum, stainless steel, decorative finishes, and electrical components are not damaged by acid or harsh chemical floor or tile treatment.

PART 4 - ITEM SPECIFICATIONS

4.1 Inclusive Terms

A. All items of equipment listed in the contract documents shall be furnished in strict accordance therewith, which shall indicate options and accessories, in addition to all standard parts, fittings, inserts, and features, that are commonly furnished by the manufacturer with each item without need of mention.

B. The KEC shall provide all parts, components, or accessories normally required for equipment to function properly or be operated by the User.

C. All references expressed on Standard Details, Special Details, Elevations, or Item Specifications shall be followed by the KEC.

4.2 Exclusive Terms

A. Features, finishes, accessories, or parts standardly provided with items of equipment may

be deleted by the KEC only if expressly deducted, deleted, or excluded in the item specifications.

B. The KEC shall not provide pots, pans, hand tools, utensils, loose cutting boards, s/s steam table or sandwich unit inserts, salad bar vessels, bowls, covers, dish racks, or flatware containers/cylinders, except where directed to do so in the item specifications.

C. The KEC shall not provide menu, poster, pricing, or directive system components, removable floor mats, floor maintenance equipment, or hoses, except where directed to do so in the item specifications.

4.3 General Terms

A. All work shall conform to the General Conditions and Specifications of the Contract.

B. The bidding documents and the General Conditions and Specifications of the Contract, are job- specific. The Owner shall not consider the KEC's failure to read, question, or understand Parts 1 through 4 and any other bidding document as a defense or mitigating justification for non- compliance with the contract documents.

C. Language, terms, and references used in the contract documents shall be interpreted as being construed in jargon commonly used in the foodservice industry. It is incumbent on the bidder/KEC to base its' work on verified project data which includes on-site investigation. Any information referred or inferred in the documents, but as may be missing, unclear or not fully understood by the bidder, must be questioned, qualified, or challenged in writing prior to the bid agreement, or the KEC shall be bound by the interpretation of the partial information by the Owner.

Note: The following kitchen equipment item numbers are shown on included CAD drawings. Items listed as N/A were deleted from the project. Other items listed as "by others" are shown for reference only. Standard details for installation may be found at the end of the document.

Kitchen Equipment Description

ITEM 001 through 005 — N/A - Spare Number

ITEM 006 — By Others – For Reference Only; Not in Contract

ITEM 007 — By Others – For Reference Only; Not in Contract

ITEM 008 through 011 — N/A - Spare Number

ITEM 012 — **Soap and Towel Dispenser** **QTY** 5
MANUFACTURER Bobrick Washroom Equipment or approved equal
MODEL B-60 / B-263
FEATURES
- Mount units above each hand sink and seal perimeter to wall.

ITEM 013 — By Others – For Reference Only; Not in Contract

ITEM 014 — By Others – For Reference Only; Not in Contract

ITEM 015 — **Food Processor** **QTY** 1
MANUFACTURER Robot Coupe or approved equal
MODEL R6VN
FEATURES
- Provide with C452GPA hard cheese grating plate; C435SA 68mm (3/8") slicing plate; and C426D 68mm (3/8") dicing plate.
- Provide with cord and cap.

ITEM 016 through 021 — N/A - Spare Number

ITEM 022 — By Others – For Reference Only; Not in Contract

ITEM 023 — N/A - Spare Number

ITEM 024 through 027 By Others – For Reference Only; Not in Contract

ITEM 028 **30-Gallon Tilting Skillet** **QTY** 1
MANUFACTURER Groen or approved equal
MODEL BPP-30G
FEATURES
- 50mm (2") draw-off tangent.
- Pan carrier and food strainer.
- Flanged feet bolted to floor.
- Utility connections through Item 24, utility raceway.

ITEM 029A **40-Gallon Tilting Kettle** **QTY** 1
MANUFACTURER Groen or approved equal
MODEL DHT/1-40
FEATURES
- 50mm (2") draw-off tangent.
- Pan carrier.
- Food strainer.
- Utility connections through Item 24, utility raceway.

ITEM 029B **20-Gallon Tilting Kettle** **QTY** 1
MANUFACTURER Groen or approved equal
MODEL DHT-20
FEATURES
- 50mm (2") draw-off tangent.
- Pan carrier and food strainer.
- Utility connections through Item 24, utility raceway.

ITEM 030 N/A - Spare Number

ITEM 031 **Convection Steamer** **QTY** 1
MANUFACTURER Cleveland or approved equal
MODEL 24-CGA-10.2
FEATURES
- Mechanical controls.
- Door steam shut-off switch.
- 200mm (8") SS legs with adjustable bullet feet.
- Utility connections through Item 24, utility raceway.

ITEM 032 **Convection Oven** **QTY** 1
MANUFACTURER Blodgett or approved equal
MODEL DFA-100-D (double)
FEATURES
- Manifold rear gas connections of each compartment.
- SS front, sides, top and solid back panels.
- No casters.
- Cord and cap set.
- Utility connections through Item 24, utility raceway.

ITEM 033 **Range/Oven** **QTY** 1
MANUFACTURER Garland or approved equal

MODEL M44R
FEATURES
- Rear gas connection; cap front manifolds with SS coverplates.
- SS front and left side.
- M34LPBG lo-profile backguard.
- M12ES spreader cabinet factory-mounted to right side with SS right side.
- 6” Stainless steel adjusting legs.
- Full length common front rail.
- Utility connections through Item 24, utility raceway.

ITEM 034 **Char-Broiler** **QTY** 1
MANUFACTURER Garland or approved equal
MODEL M34B
FEATURES
- Rear gas connection; cap front manifolds with SS coverplates.
- SS front and left side.
- M12ES spreader cabinet factory-mounted to right side with SS right side.
- 6” Stainless steel adjusting legs.
- Full length common front rail.
- Utility connections through Item 24, utility raceway.

ITEM 035 **Fryer Assembly** **QTY** 1
MANUFACTURER Frymaster or approved equal
MODEL FM-50BL-SC
FEATURES
- SS pot, door, and cabinet sides.
- Filter Magic system with FWH-1 dump station and heat lamp mounted on right.
- Timed-controlled automatic basket lifter.
- Fry pot cover.
- Spreader drain.
- Top connecting strip.
- Sediment tray.
- Three (3) cord and cap sets.
- No casters.
- Utility connections through Item 24, utility raceway.
- Gas/electric utility.

ITEM 036 through 038 N/A - Spare Number

ITEM 039 **Pass-Thru Refrigerator** **QTY** 1
MANUFACTURER Traulsen or approved equal
MODEL RHT 132 WPUT
FEATURES
- Half-height doors.
- No. 1 tray slides, nine (9) pairs per compartment.
- Full-perimeter SS angle trim to seal off gap between cabinet body and opening in wall, both sides, by KEC.

- 150mm (6") legs.
- "Kool Klad" plastic laminate factory installed on serving side only; color as selected by owner.
- Digital thermometer on kitchen side.
- Cord and cap set.

ITEM 040 through 041 N/A - Spare Number

ITEM 042 through 044 By Others – For Reference Only; Not in Contract

ITEM 045 **Fryer Assembly** **QTY** 1
MANUFACTURER Frymaster or approved equal
MODEL FM-2-50BL-SC
FEATURES
- SS pot, door and cabinet sides.
- Filter Magic system with FWH-1 dump station and heat lamp mounted on right side.
- Timed-controlled automatic basket lifters, each fryer.
- Fry pot covers.
- Top connecting strips.
- Sediment trays.
- Cord and cap sets.
- Gas/electric utility connections through Item 42, utility raceway.

ITEM 046 **Char-Broiler** **QTY** 1
MANUFACTURER Garland or approved equal
MODEL GXRN24
FEATURES
- SS sides.
- 610mm (24") wide SS splatter guard.

ITEM 047 **Griddle** **QTY** 1
MANUFACTURER Garland or approved equal
MODEL GXT4
FEATURES
- SS sides.

ITEM 048 **Refrigerated Base** **QTY** 1
MANUFACTURER Delfield or approved equal
MODEL FC17C78
FEATURES
- SS finished ends.
- Laminate drawer fronts only; color as selected by owner's representative.

ITEM 049 through 051 N/A - Spare Number

ITEM 052 **Grill Counter** **QTY** 1
MANUFACTURER Fabricator

MODEL Custom

FEATURES
- Size and shape as shown on plans and elevations.
- Refer to Standard Detail 4.03 et.al.
- SS framework.
- 14 Ga. GI subtop for supporting finished top.
- Front panels shall be per Standard Detail 4.06A.
- Provide and mount 20mm (3/4") Corian top, color or pattern and 40mm (1-1/2") edge detail as specified by owner's representative.
- Provide equipment and superstructure cut-outs in Corian and subtop with adequate free space to avoid cracking of the Corian due to expansion and contraction or movement. Bed the Corian top in silicone to allow expansion and contraction, and seal all surface seams against moisture penetration.
- Provide receptacles mounted under counter top as required for equipment; grommet any holes required for cord and cap sets.
- 150mm (6") SS counter legs.
- Clip-on toe base per Standard Detail 1.25.
- Full length tray slide of Corian; color as selected by owner's representative.

ALTERNATES None

ITEM 053 N/A - Spare Number

ITEM 054 **Refrigerated Cold Pan** **QTY** 1

MANUFACTURER Atlas Metal Industries or approved equal

MODEL WCM-4

FEATURES
- Removable perforated false bottom in sections.
- SS adapter bars.
- Cord and cap set.

ITEM 055 **Sneeze Guard** **QTY** 1

MANUFACTURER Advanced Design Manufacturing or approved equal

MODEL S-295

FEATURES
- Self-service unit.
- Powder coat finish, color as selected by owner's representative.
- 710mm wide x 1675mm long x 635mm high (28" x 66" x 25").
- Clear tempered glass hinged panels with flip-up capability for cleaning.
- Clear glass top.
- Full length light fixture with shatterproof cover; conceal wiring in uprights.
- Mount securely to top of Item 52, grill counter, with rough surface-mount flange.
- Provide shop drawings for review and approval.

ITEM 056 N/A - Spare Number

ITEM 057 **Drop-In Heated Shelf** **QTY** 1

MANUFACTURER Hatco
MODEL GRSB-48
FEATURES
- Cord and cap set.

ALTERNATES Merco, or approved equal.

ITEM 058 **Food Protector** **QTY** 1

MANUFACTURER Advanced Design Manufacturing or approved equal
MODEL A-452
FEATURES
- Full service unit.
- Powder coat finish, color as selected by owner's representative.
- 305mm wide x 1375mm long x 370mm high (12" x 54" x 14-1/2").
- Clear tempered glass hinged panels with flip-up capability for cleaning.
- Solid top with Hatco GRHL-48 heat lamp with incandescent lights; conceal wiring in uprights.
- Mount securely to top of Item 52, grill counter, with rough surface-mount flange.
- Provide shop drawings for review and approval.

ITEM 059 **Main Entree Counter** **QTY** 1

MANUFACTURER Fabricator
MODEL Custom
FEATURES
- Size and shape as shown on plans and elevations.
- Refer to Standard Detail 4.03 et.al.
- SS framework.
- 14 Ga. GI subtop for supporting finished top.
- Front panels shall be per Standard Detail 4.06A.
- Provide and mount 20mm (3/4") Corian top, color or pattern and 40mm (1-1/2") edge detail as specified by owner's representative.
- Provide equipment and superstructure cut-outs in Corian and subtop with adequate free space to avoid cracking of the Corian due to expansion and contraction or movement. Bed the Corian top in silicone to allow expansion and contraction, and seal all surface seams against moisture penetration.
- Provide receptacles mounted under counter top as required for equipment; grommet any holes required for cord and cap sets.
- Provide 203mm (8") plate shelf on server's side 255mm (10") below counter with closed ends.
- 150mm (6") SS counter legs.
- Clip-on toe base per Standard Detail 1.25.

- Full length tray slide of Corian; color as selected by owner's representative.

ITEM 060 N/A - Spare Number

ITEM 061 **Hot Food Wells** **QTY** 2

MANUFACTURER Atlas Metal Industries or approved equal

MODEL WIH-DM-4

FEATURES
- Ship control panels loose for mounting into counter fascia by Fabricator.
- Drains manifold to common valve installed for easy accessibility by Operator without having to reach under serving counter.
- Provide eight (8) Vollrath Model 3004-5 SS pans with #77200 full-size dome covers.
- Cord and cap set.

ITEM 062 **Food Protector** **QTY** 2

MANUFACTURER Advanced Design Manufacturing or approved equal

MODEL A-452

FEATURES
- Full service unit.
- Powder coat finish, color as selected by owner's representative.
- Each 305mm wide x 1780mm long x 370mm high (12" x 70" x 14-1/2").
- Clear tempered glass hinged panels with flip-up capability for cleaning.
- Solid top with Hatco GRHL-48 heat lamp with incandescent lights; conceal wiring in uprights.
- Mount securely to top of Item 59, main entree counter, with rough surface-mount flange.
- Provide shop drawings for review and approval.

ITEM 063 **Conveyor Toaster** **QTY** 1

MANUFACTURER Holman or approved equal

MODEL QCS1-350

FEATURES
- Cord and cap sets.

ITEM 064 **Deli Counter** **QTY** 1

MANUFACTURER Fabricator

MODEL Custom

FEATURES
- Size and shape as shown on plans and elevations.
- Refer to Standard Detail 4.03 et.al.
- SS framework.
- 14 Ga. GI subtop for supporting finished top.
- Front panels shall be per Standard Detail 4.06A.

- Provide and mount 20mm (3/4") Corian top, color or pattern and 40mm (1-1/2") edge detail as specified by owner's representative.
- Provide equipment and superstructure cut-outs in Corian and subtop with adequate free space to avoid cracking of the Corian due to expansion and contraction or movement. Bed the Corian top in silicone to allow expansion and contraction, and seal all surface seams against moisture penetration.
- Provide receptacles mounted under counter top as required for equipment; grommet any holes required for cord and cap sets.
- Provide 203mm (8") plate shelf on server's side 255mm (10") below counter with closed ends.
- 150mm (6") SS counter legs.
- Clip-on toe base per Standard Detail 1.25.
- Full length tray slide of Corian; color as selected by owner's representative.

ITEM 065 **Refrigerated Cold Pan** **QTY** 2

MANUFACTURER Atlas Metal Industries or approved equal

MODEL WCM-4

FEATURES
- Removable perforated false bottom in sections.
- SS adapter bars.
- Cord and cap set.

ITEM 066 **Food Protector** **QTY** 2

MANUFACTURER Advanced Design Manufacturing or approved equal

MODEL A-452

FEATURES
- Full service unit.
- Powder coat finish, color as selected by owner's representative.
- Each 305mm wide x 1675mm long x 370mm high (12" x 66" x 14-1/2").
- Clear tempered glass hinged panels with flip-up capability for cleaning.
- Clear tempered glass top.
- Mount securely to top of Item 64, deli counter, with rough surface-mount flange.
- Provide shop drawings for review and approval.

ITEM 067 **Reach-In Refrigerator** **QTY** 1

MANUFACTURER Traulsen or approved equal

MODEL RHT 132 NUT

FEATURES
- Half-height doors hinged per plan.
- Top compartment fitted with #1 tray slides spaced 75mm (3") on center, nine (9) total.

- Bottom compartment fitted with SS wire shelves, three (3) total.

ITEM 068 **Mobile Tray Stand** **QTY** 2

MANUFACTURER Fabricator

MODEL Custom

FEATURES
- Size and shape as indicated on plans and elevations.
- One unit to be sized for ADA access, with flatware dispensers below tray shelf.
- Refer to Elevations and Sections for details.
- Fabricate per Standard Details 4.03 et. al., with 14 Ga. GI subtop for supporting finished top. The front panels shall be as Standard Detail 4.06A.
- Provide and mount 20mm (3/4") Corian top, color or pattern and 40mm (1-1/2") edge detail as specified by owner's representative.
- Provide cutouts for utensil dispensers in Corian top; dispenser containers by Operator, Not in kitchen contract.

ITEM 069 **Air Screen Refrigerated Merchandiser** **QTY** 1

MANUFACTURER Refcon or approved equal

MODEL SWINBS048

FEATURES
- Exterior front and end panels laminated; color selection by owner's representative.
- Pocket doors.
- Mirrored ends.
- Condensate evaporator.
- Cord and cap set.

ITEM 070 N/A - Spare Number

ITEM 071 **Beverage/Dessert Counter** **QTY** 1

MANUFACTURER Fabricator

MODEL Custom

FEATURES
- Size and shape as shown on plans and elevations.
- Refer to Standard Detail 4.01 et.al.
- SS framework.
- 14 Ga. GI subtop for supporting finished top.
- 865mm (34") high to counter top.
- 255mm (10") backsplash.
- Electrical Subpanel A where shown on plan and elevations.
- Hinged doors open to bottom and intermediate shelves.
- Provide and mount 20mm (3/4") Corian top, color or pattern and 40mm (1-1/2") edge detail as specified by owner's representative.

- Provide equipment and superstructure cut-outs in Corian and subtop with adequate free space to avoid cracking of the Corian due to expansion and contraction or movement. Bed the Corian top in silicone to allow expansion and contraction, and seal all surface seams against moisture penetration.
- Provide receptacles mounted under counter top as required for equipment; grommet any holes required for cord and cap sets.
- 150mm (6") SS counter legs.
- Clip-on toe base per Standard Detail 1.25 on both sides.
- Full length tray slide of Corian; color as selected by owner's representative.

ITEM 072 **Hot Cup Dispenser** **QTY** 1

MANUFACTURER Dispense-Rite or approved equal

MODEL CTC-R-4-SS

FEATURES
- Verify size and type of cups to be dispensed.
- Locate where shown on plan.

ITEM 073 N/A - Spare Number

ITEM 074 **Scrap Chute** **QTY** 3

MANUFACTURER Dispense-Rite or approved equal

MODEL TCD-2NB

FEATURES
- Install in Item 71, beverage/dessert counter, and Item 85, beverage counter, where shown on plan.
- Provide one (1) Rubbermaid Model 2956-LG trashcan per chute.

ITEM 075 through 078 N/A- Spare Number

ITEM 079 **Soup/Salad Counter** **QTY** 1

MANUFACTURER Fabricator

MODEL Custom

FEATURES
- Size and shape as shown on plans and elevations.
- Refer to Standard Detail 4.01 et.al.
- SS framework.
- 14 Ga. GI subtop for supporting finished top.
- 865mm (34") high to counter top.
- Electrical Subpanel B where shown on plan and elevations.
- Louver panel on end closest to refrigerated cold pan for air circulation.
- Provide and mount 20mm (3/4") Corian top, color or pattern and 40mm (1-1/2") edge detail as specified by owner's representative.

- Provide equipment and superstructure cut-outs in Corian and subtop with adequate free space to avoid cracking of the Corian due to expansion and contraction or movement. Bed the Corian top in silicone to allow expansion and contraction, and seal all surface seams against moisture penetration.
- Provide receptacles mounted under counter top as required for equipment; grommet any holes required for cord and cap sets.
- 150mm (6") SS counter legs.
- Clip-on toe base per Standard Detail 1.25 on both sides.
- Full length tray slide of Corian; color as selected by owner's representative.

ITEM 080 N/A - Spare Number

ITEM 081 **Refrigerated Cold Pan** **QTY** 1

MANUFACTURER Atlas Metal Industries or approved equal

MODEL WCM-6

FEATURES
- Removable perforated false bottom in sections.
- SS adapter bars.
- Cord and cap set.

ITEM 082 **Sneeze Guard** **QTY** 1

MANUFACTURER Advanced Design Manufacturing or approved equal

MODEL S-280

FEATURES
- Self-service unit.
- Powder-coated finish, color selection by owner's representative.
- Size and shape as shown on plan, to cover all equipment.
- Full length fluorescent light fixtures with shatterproof cover; conceal wiring in uprights.
- Mount securely to top of Item 79, salad counter, with round surface-mounted flanges.
- Provide shop drawings for review and approval.

ITEM 083 **Hot Food Wells** **QTY** 1

MANUFACTURER Atlas Metal Industries or approved equal

MODEL WIH-DM-3

FEATURES
- Ship control panels loose for mounting into counter fascia by Fabricator.
- Drains manifold to common valve installed for easy accessibility by Operator without having to reach under serving counter.
- Provide three (3) Vollrath Model 3004-5 SS pans with #77200 full-size dome covers.
- Cord and cap set.

ITEM 084 **Soup Wells** **QTY** 3

MANUFACTURER Toastmaster or approved equal

MODEL 1506D

FEATURES
- Mount controls inside salad/soup counter base cabinet where easily accessible.
- Furnish with gate valve pre-mounted on drain lines.

ITEM 085 **Beverage Counter** **QTY** 1

MANUFACTURER Fabricator

MODEL Custom

FEATURES
- Size and shape as shown on plans and elevations.
- Refer to Standard Detail 4.01 et.al.
- SS framework.
- 14 Ga. GI subtop for supporting finished top.
- 865mm (34") high to counter top.
- 150mm (6") backsplash.
- Hinged doors open to bottom and intermediate shelves.
- Provide and mount 20mm (3/4") Corian top, color or pattern and 40mm (1-1/2") edge detail as specified by owner's representative.
- Provide equipment and superstructure cut-outs in Corian and subtop with adequate free space to avoid cracking of the Corian due to expansion and contraction or movement. Bed the Corian top in silicone to allow expansion and contraction, and seal all surface seams against moisture penetration.
- Provide receptacles mounted under counter top as required for equipment; grommet any holes required for cord and cap sets.
- 150mm (6") SS counter legs.
- Clip-on toe base per Standard Detail 1.25.
- Full length tray slide of Corian; color as selected by owner's representative.

ITEM 086 **Cold Cup Dispenser** **QTY** 2

MANUFACTURER Dispense-Rite or approved equal

MODEL CTC-R-4-SS

FEATURES
- Verify cup size and type to be dispensed.
- Locate where shown on plan..

ITEM 087 **Ice/Soda Dispenser – Not in Contract** **QTY** 2

MANUFACTURER Snack Vendor

MODEL Generic

FEATURES
- Item by Vendor; NIC.

ALTERNATES None

ITEM 088 **Bag-n-Box System – Not in Contract** **QTY** 1

MANUFACTURER Snack Vendor
MODEL Generic
FEATURES
- Item by Vendor; NIC.

ALTERNATES None

ITEM 089 **Iced Tea Brewer** **QTY** 2

MANUFACTURER Bunn-O-Matic or approved equal
MODEL TU3Q/TD4T
FEATURES
- Two (2) 110-CP water filters mounted below countertop.
- Item by Others; NIC.

ITEM 091 **Juice Dispenser – Not in Contract** **QTY** 2

MANUFACTURER Snack Vendor
MODEL Generic
FEATURES
- Item by Vendor; Not in Contract.

ITEM 092 **Coffee Brewer** **QTY** 1

MANUFACTURER Bunn-O-Matic or approved equal
MODEL Dual SH
FEATURES
- One (1) 110-CP water filter mounted below countertop.
- Two (2) SH 1.5 gallon servers.
- One (1) drip tray.

ITEM 093 **Cashier Stand** **QTY** 2

MANUFACTURER Fabricator
MODEL Custom
FEATURES
- Size and shape as shown on plans and elevations.
- Refer to Standard Detail 4.01 et.al.
- SS framework.
- 14 Ga. GI subtop for supporting finished top.
- Provide and mount 20mm (3/4") Corian top, color or pattern and 40mm (1-1/2") edge detail as specified by owner's representative.
- Provide equipment and superstructure cut-outs in Corian and subtop with adequate free space to avoid cracking of the Corian due to expansion and contraction or movement. Bed the Corian top in silicone to allow expansion and contraction, and seal all surface seams against moisture penetration.
- 150mm (6") SS counter legs.
- Clip-on toe base per Standard Detail 1.25 on both sides.
- Full length tray slides of Corian; color as selected by owner's representative.

ITEM 094 through 095 N/A- Spare Number

ITEM 096 through 097 By Others – For Reference Only; Not in Contract

ITEM 098 **Mobile Trash Container** **QTY** 2
MANUFACTURER Rubbermaid or approved equal
MODEL 2634
FEATURES
- Gray in color.
- Five (2) Model 2631 matching flat lids.
- Five (2) Model 2640 conversion dollies.

ITEM 099 By Others – For Reference Only; Not in Contract

ITEM 100 N/A- Spare Number

ITEM 101 through 104 By Others – For Reference Only; Not in Contract

ITEM 105 **Mobile Tray Dolly** **QTY** 2
MANUFACTURER Servo-Lift Eastern Corporation or approved equal
MODEL D-130-35
FEATURES
- Rotating non-marking neoprene bumpers.
- Casters with polyurethane tires.

ITEM 106 N/A- Spare Number

ITEM 107 through 108 By Others – For Reference Only; Not in Contract

STANDARD DETAILS INDEX FOR EQUIPMENT INSTALLATION

DETAIL #	DETAIL NAME
1.01	**FIELD JOINTS & ASSEMBLY**
1.02	**EDGES**
1.02.1	**EDGES**
1.03	**CORNER GUARDS**
1.04	**BACKSPLASHES**
1.04.1	**ENCLOSED BACKSPLASH**
1.05	**TABLE & DRAINBOARD FRAMEWORK**
1.25	**CLIP-ON TOE BASE**
3.04	**COUNTER TOP SINKS**
4.01	**BACK COUNTER**

4.03 CAFETERIA COUNTERS
4.06 MILLWORK CAFETERIA COUNTER FRONT, PANELED

See the following pages for detail numbers 1.01 through 4.06.

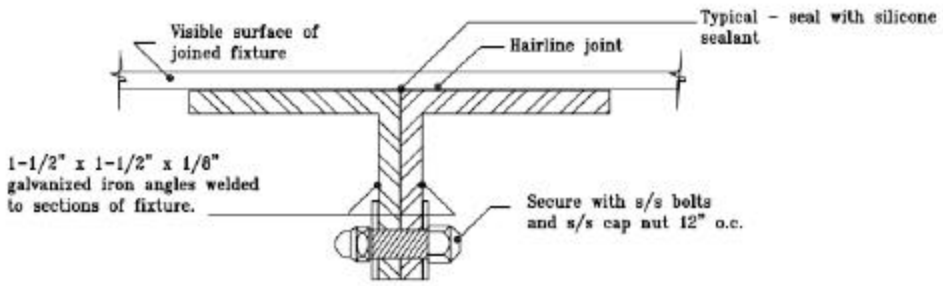

Items to be joined are to be drawn together, leaving only a hairline seam; seal with silicone sealant.

A. BOLT DRAWN JOINT

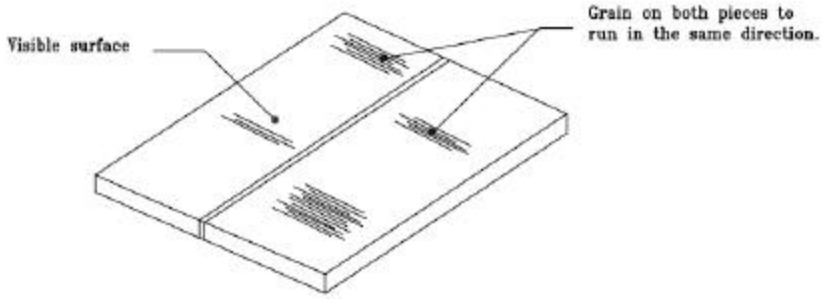

On fixtures specified with welded field joints, welds to be continuous, ground and polished so that no evidence of weld is visible.

B. WELDED BUTT JOINT

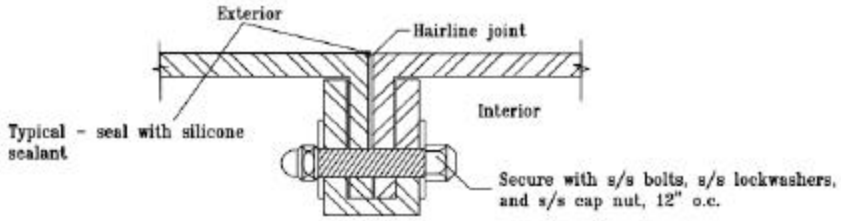

Items to be joined are to be drawn together, leaving only a hairline seam; seal with silicone sealant.

C. RAISED CAP SEAM - KNUCKLE JOINT

Tricon Foodservice Consultants, Inc.	FIELD JOINTS & ASSEMBLY	STANDARD DETAIL 1.01
	NOT TO SCALE	4/17/92

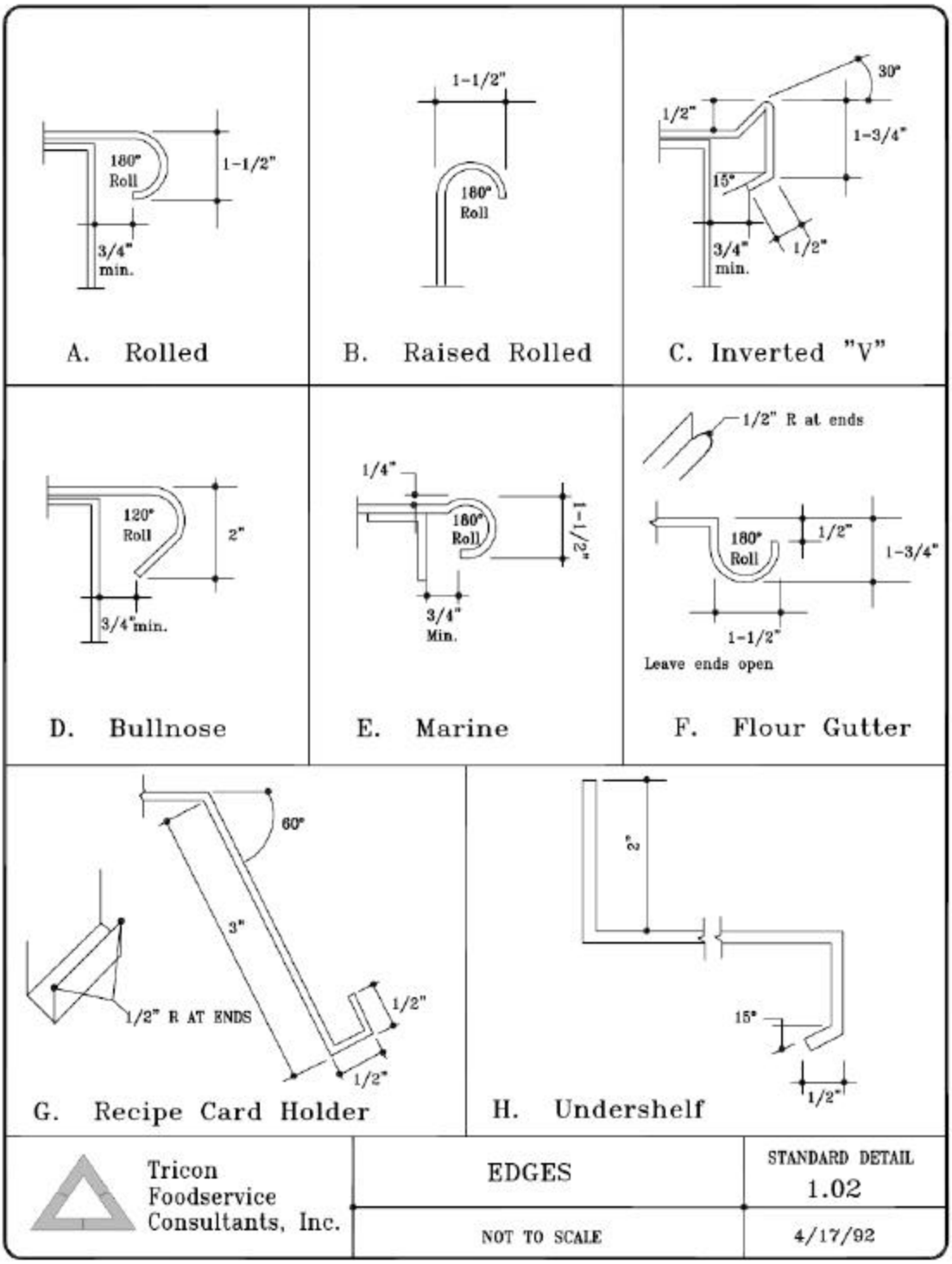
180° Roll
1-1/2"
3/4" min.
A. Rolled
1-1/2"
180° Roll
B. Raised Rolled
30°
1/2"
1-3/4"
15°
3/4" min.
1/2"
C. Inverted "V"
120° Roll
2"
3/4" min.
D. Bullnose
1/4"
180° Roll
1-1/2"
3/4" Min.
E. Marine
1/2" R at ends
180° Roll
1/2"
1-3/4"
1-1/2"
Leave ends open
F. Flour Gutter
60°
3"
1/2" R AT ENDS
1/2"
1/2"
G. Recipe Card Holder
2"
15°
1/2"
H. Undershelf
Tricon Foodservice Consultants, Inc.
EDGES
STANDARD DETAIL
1.02
NOT TO SCALE
4/17/92

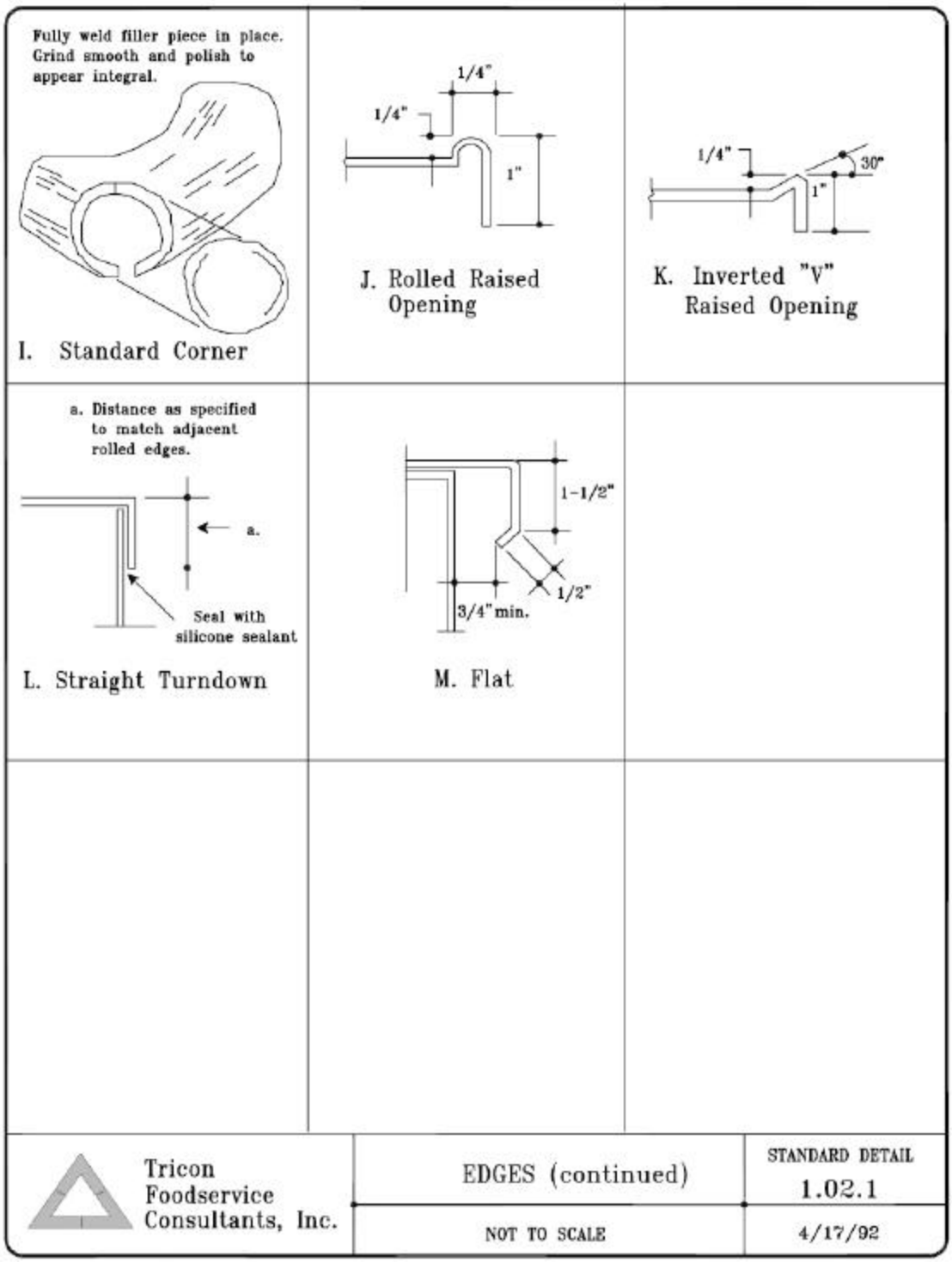
Fully weld filler piece in place. Grind smooth and polish to appear integral.
I. Standard Corner
1/4"
1/4"
1"
J. Rolled Raised Opening
1/4"
30°
1"
K. Inverted "V" Raised Opening
a. Distance as specified to match adjacent rolled edges.
a.
Seal with silicone sealant
L. Straight Turndown
1-1/2"
1/2"
3/4" min.
M. Flat
Tricon Foodservice Consultants, Inc.
EDGES (continued)
NOT TO SCALE
STANDARD DETAIL
1.02.1
4/17/92

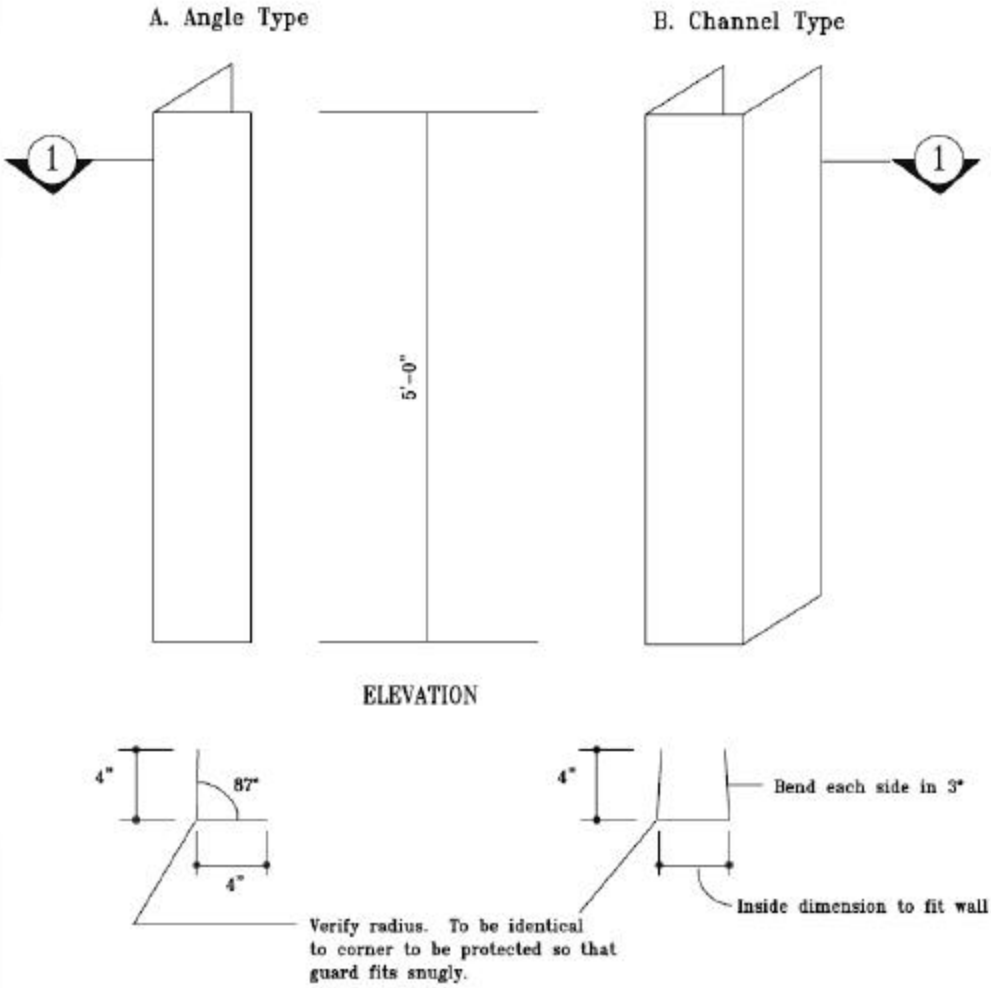

Note: Mount 16 GA. stainless steel corner guards on corners immediately above 5" high cove base tile with suitable s/s fasteners and seal.

Tricon Foodservice Consultants, Inc.	CORNER GUARDS	STANDARD DETAIL 1.03
	NOT TO SCALE	6/19/96

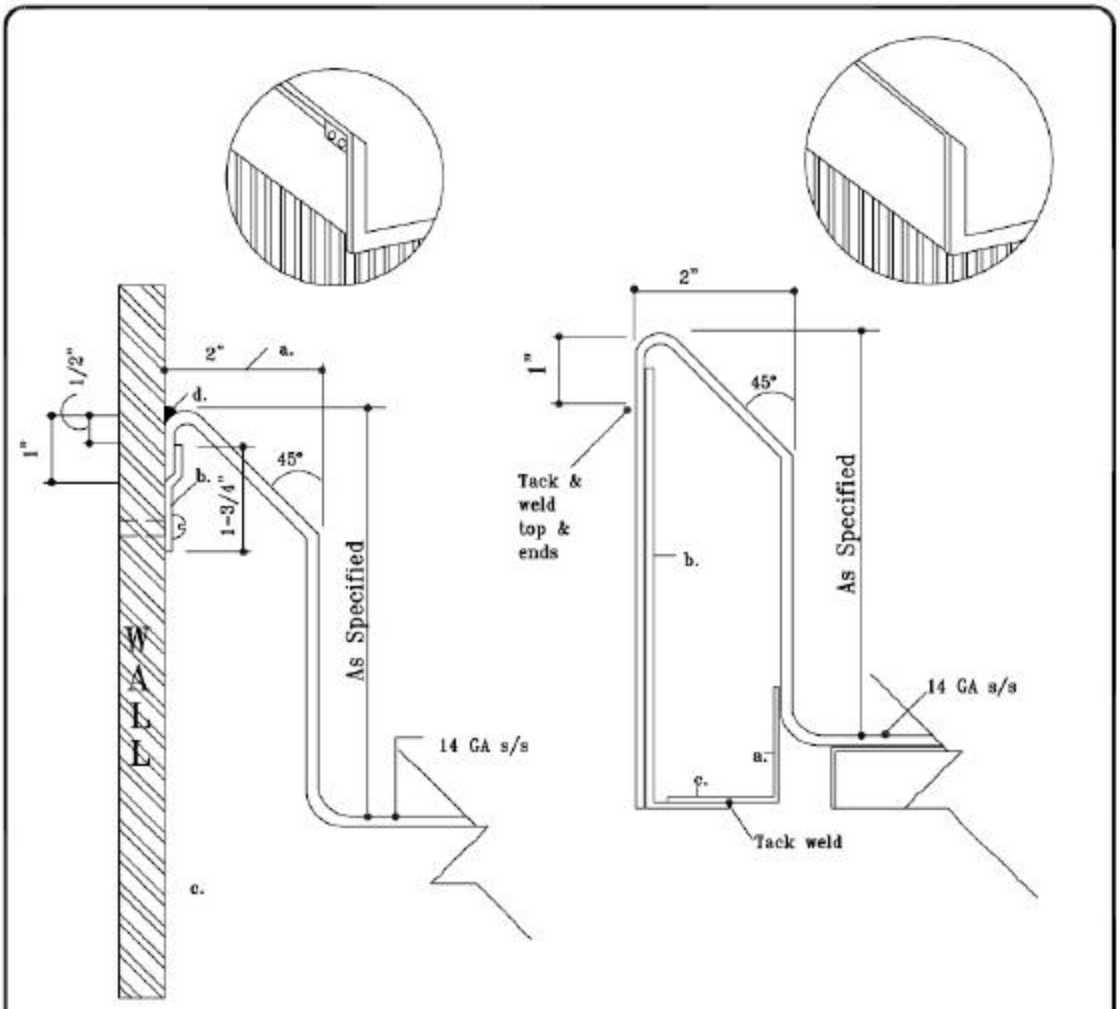

WALL UNIT – A

a. 2-1/2" at sinks to allow for connected overflow.
b. 12 GA s/s clip, 4" long, fastened to wall at each end of unit and 4'-0" o.c. Secure to wall with a minimum of two. Use 1/4" x 20 s/s bolts with toggles or expansion shields.
c. Exposed ends to be fully welded closed.
d. Seal to wall all around.

FREE STANDING UNIT – B

a. 2-1/2" x 1-1/2" x 1-1/2" 14 GA s/s clip welded to splash. One at each end of unit and 12" o.c.
b. 18 GA s/s panel tack weld to clips and splash.
c. Exposed ends to be fully closed.

Note: If access to splash on Detail B is required for electrical or plumbing, use removable panel as shown on Standard Detail 1.04.1.

Tricon Foodservice Consultants, Inc.	BACKSPLASHES	STANDARD DETAIL 1.04
	NOT TO SCALE	5/15/92

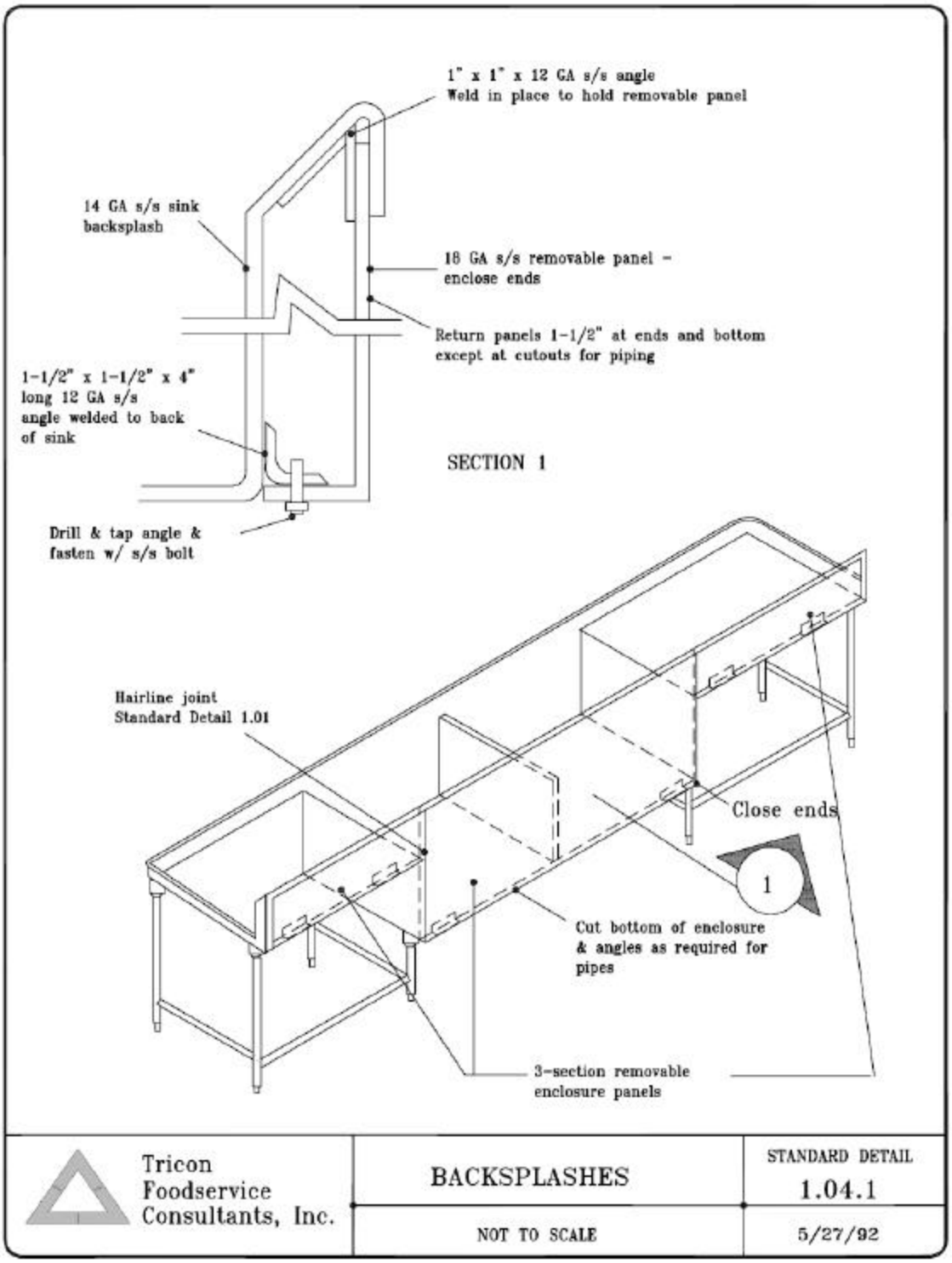
1" x 1" x 12 GA s/s angle
Weld in place to hold removable panel
14 GA s/s sink backsplash
18 GA s/s removable panel - enclose ends
Return panels 1-1/2" at ends and bottom except at cutouts for piping
1-1/2" x 1-1/2" x 4" long 12 GA s/s angle welded to back of sink
SECTION 1
Drill & tap angle & fasten w/ s/s bolt
Hairline joint Standard Detail 1.01
Close ends
1
Cut bottom of enclosure & angles as required for pipes
3-section removable enclosure panels
Tricon Foodservice Consultants, Inc.
BACKSPLASHES
STANDARD DETAIL
1.04.1
NOT TO SCALE
5/27/92

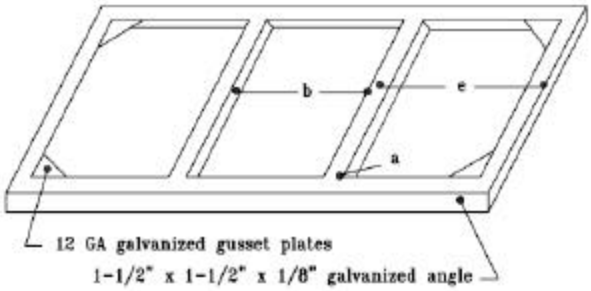

A. Tables

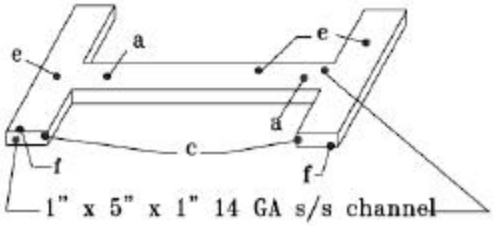

B. Dish Tables

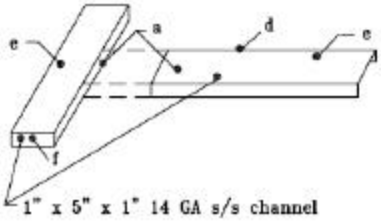

C. Sink Drainboards

a. Fully welded construction.
b. Angle location - ends; sides of top inserts; intermediates 24" on center.
c. Channel location - ends and intermediates maximum 5'-6" on center.
d. Add center channel when drainboard length exceeds 4'-6".
e. Secure top to framework with welded studs, s/s lockwashers, and s/s cap nuts. Maximum 15" on center.
f. Close channel at front only.

Tricon Foodservice Consultants, Inc.	TABLE & DRAINBOARD FRAMEWORK	STANDARD DETAIL 1.05
	NOT TO SCALE	4/22/92

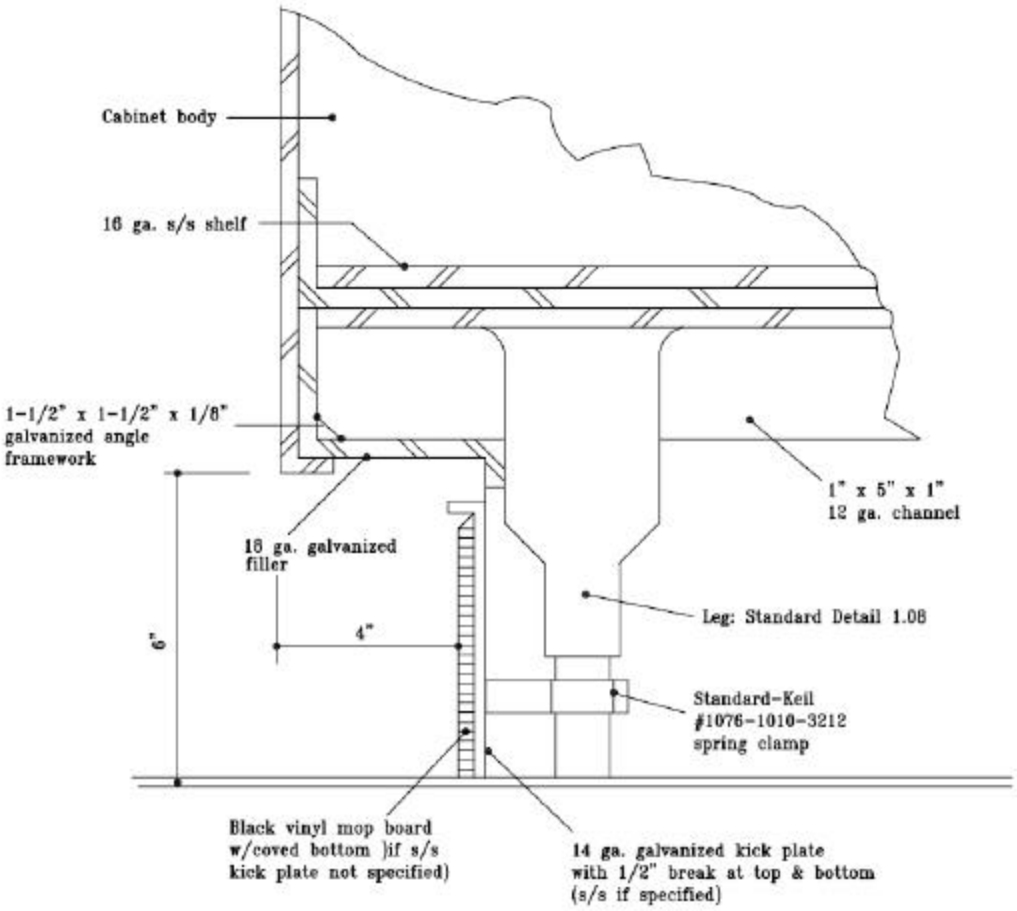

Tricon Foodservice Consultants, Inc.	CLIP-ON BASE	STANDARD DETAIL 1.25
	NOT TO SCALE	8/13/99

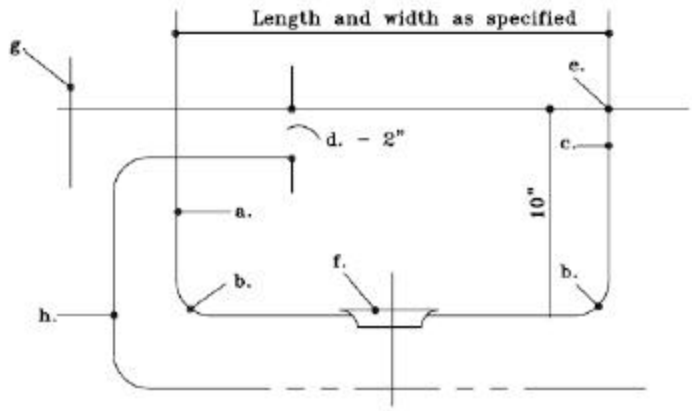

TYPICAL SECTION

a. Material - 14 ga. s/s.

b. Entire unit shall be all welded cove cornered construction with vertical and horizontal and interior corners having a 3/4" radius; fully weld sink to top without overlapping joints.

c. Two sides and bottom shall be one continuous piece with ends welded integral, without overlapping joints.

d. Partitions between compartments to be double walled construction with 1/2" radius rounded top, all welded integral with sink.

e. Fully weld sink to top without overlapping joints.

f. Wastes shall be seated in die stamped depressions without use of solder, rivets or welding. Installed components shall be flush with surrounding surface.

g. Faucets - T&S Model B-222 with B-199 aerator, removable monel seats and 1/2" IPS male inlets.

h. Wastes - 2" nickel plated bronze rotary handle waste and s/s strainer plate with chrome plated brass connected overflow, Standard-Keil Hardware Company Model 1770-1020-1000.

Tricon Foodservice Consultants, Inc.	COUNTER TOP SINKS	STANDARD DETAIL 3.04
	NOT TO SCALE	1/4/00

a. Size as specified.

b. Seal with silicone sealant.

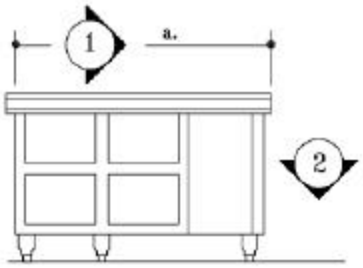

Note: Pop rivets and exposed studs and cap nuts not acceptable.

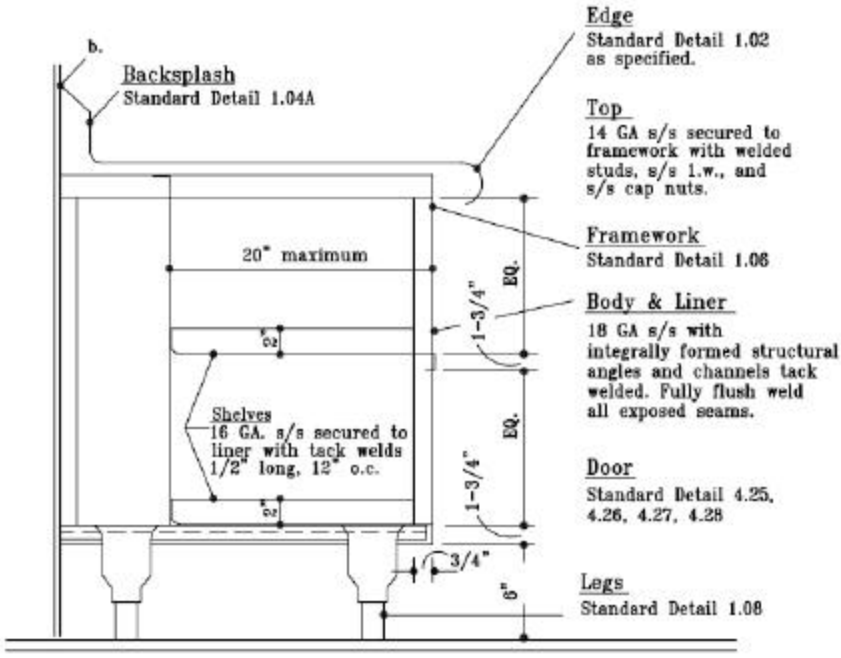

SECTION 1

NOT TO SCALE

Tricon Foodservice Consultants, Inc.	BACK COUNTER	STANDARD DETAIL 4.01
	See also: 1.02, 1.04A, 1.06, 1.08, 4.25, 4.26, 4.27, and 4.28	1/11/00

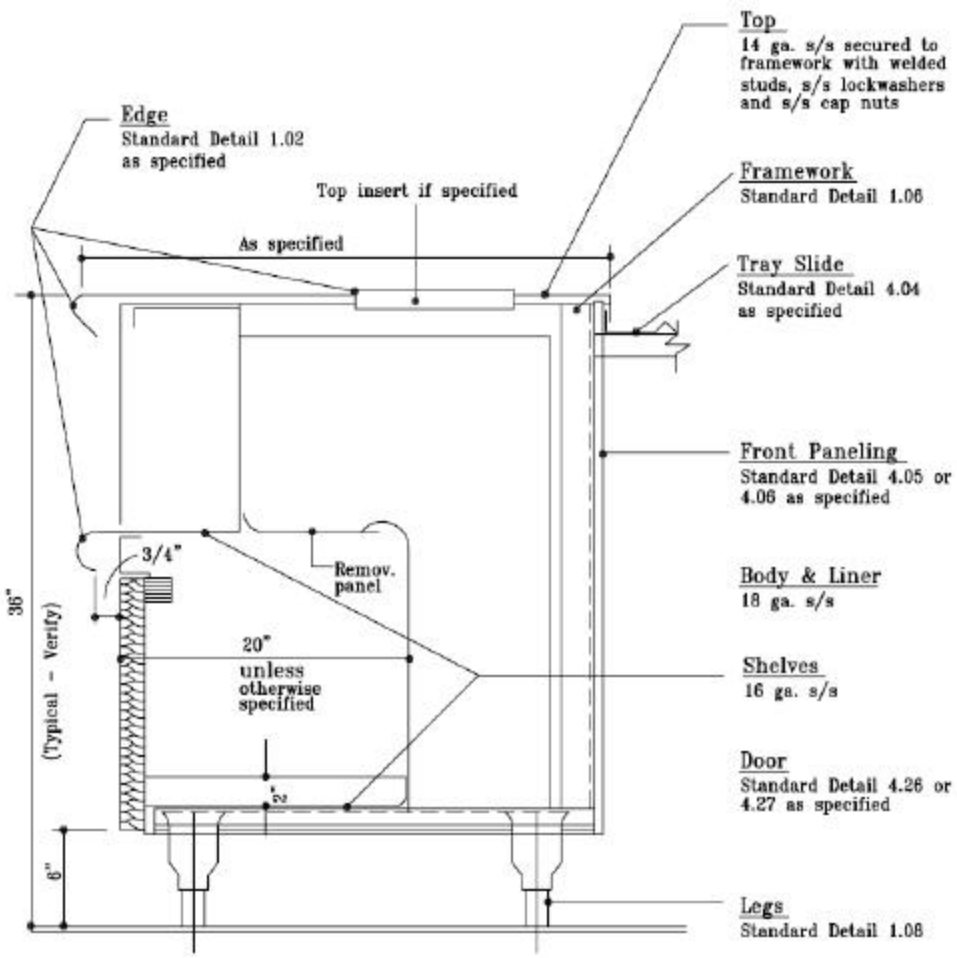

TYPICAL SECTION

Note: Pop rivets, exposed studs and cap nuts not acceptable.

NOT TO SCALE

Tricon Foodservice Consultants, Inc.	CAFETERIA COUNTERS	STANDARD DETAIL 4.03
	See also: 1.02, 1.06, 1.08, 4.04, 4.05, 4.06, 4.26, and 4.27	1/14/00

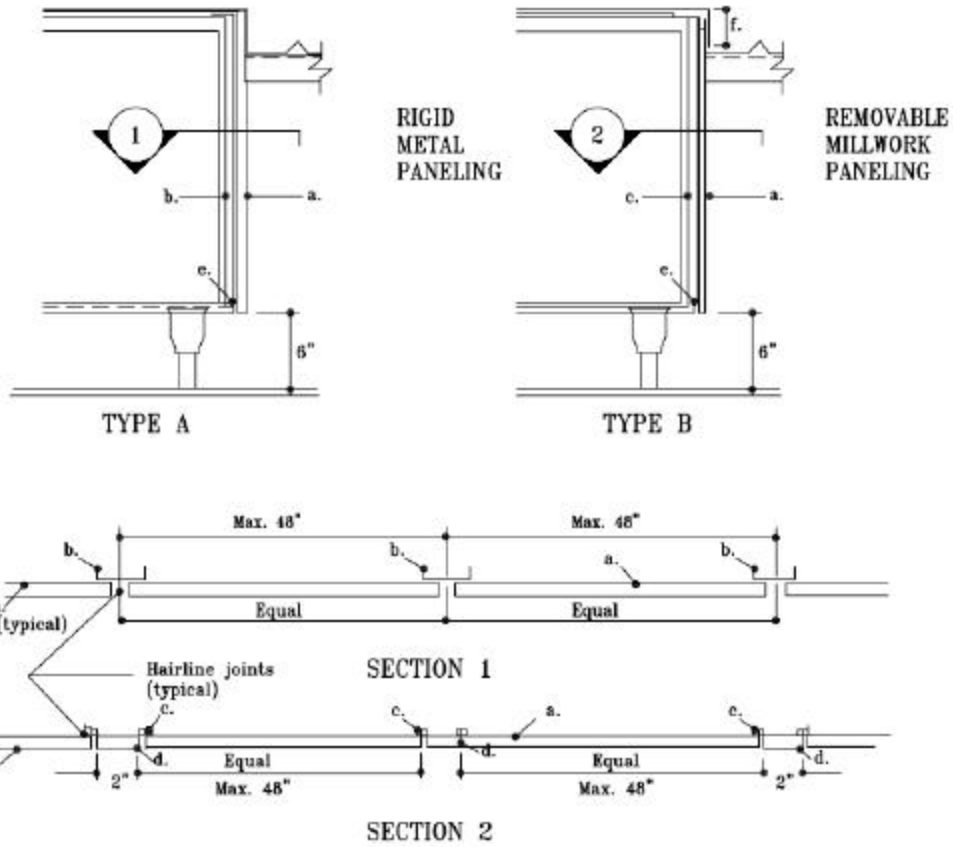

a. Paneling – Plastic laminate bond to 3/4" particle board front and exposed edges; 1/16 backing sheet requied on back and bottom edge.

b. 1" x 2" x 1" 14 ga. galv. channel fully welded to framework.

c. 1" x 4" x 1" x 14 ga. galv. channel fully welded to framework.

d. 1" x 1" x 2" x 1" x 1" x 14" ga. s/s hat channel (mullion) secured to galv. channel with unexposed welded studs, s/s lockwashers and cap nut.

e. S/S clips.

f. Provide dimension large enough so panel can slide up to release clip "e" so panel can be removed.

Tricon Foodservice Consultants, Inc.	MILLWORK CAFETERIA COUNTER FRONT, PANELED	STANDARD DETAIL 4.06
	NOT TO SCALE	2/2/00

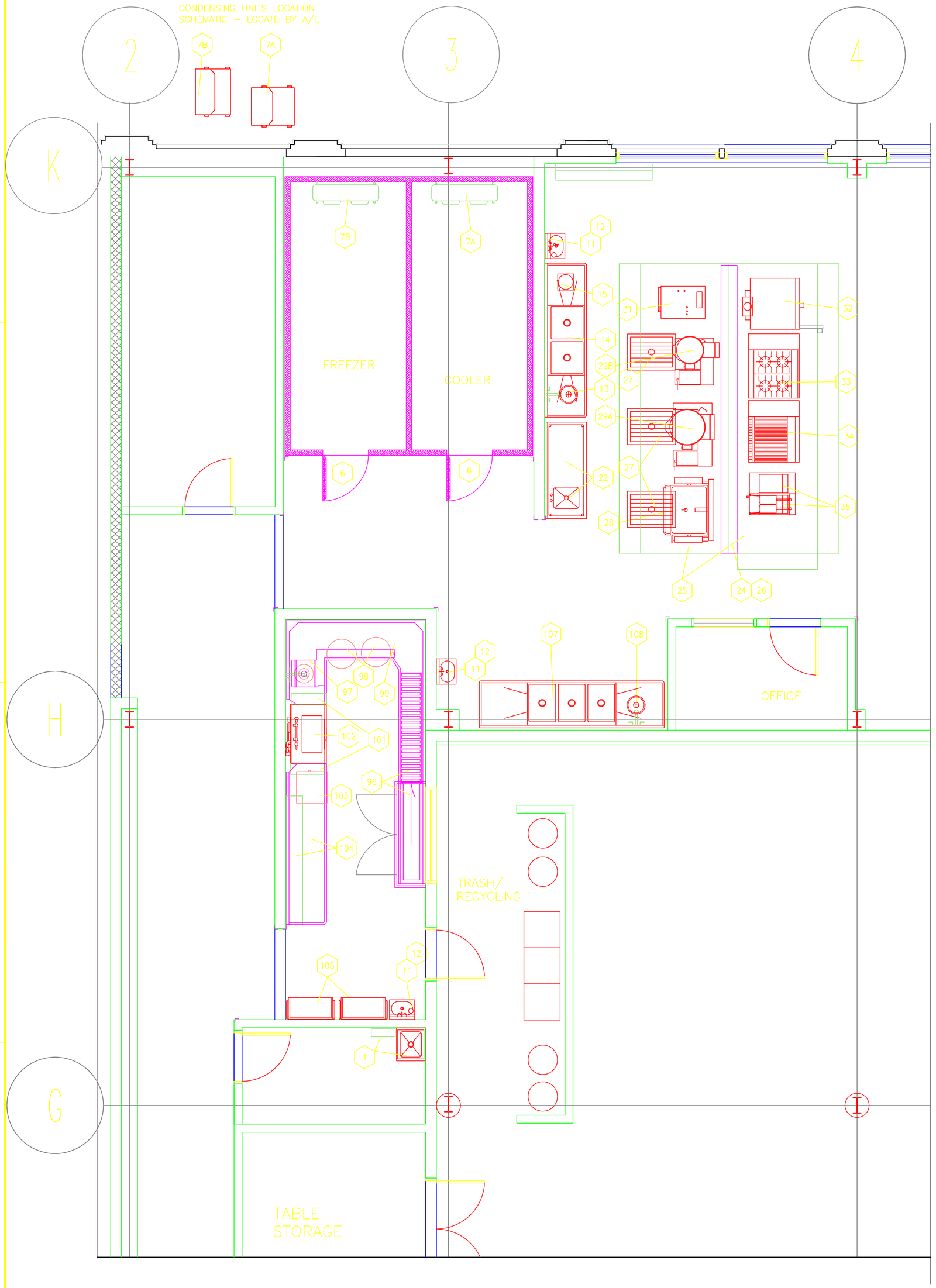

GRAPHIC SCALE1:50 mm
0 500 1000 2500 5000

N

EQUIPMENT SCHEDULE

ITEM	NEW KITCHEN EQUIPMENT	DESCRIPTION	COMMENTS	QTY
001		Mop Sink and Rack	By Others – For Reference Only; NIC	1
002		Spare Number		N/A
003		Spare Number		N/A
004		Spare Number		N/A
005		Spare Number		N/A
006		Walk-In Cooler / Freezer	By Others – For Reference Only; NIC	1
007A		Refrigeration System +35°F	By Others – For Reference Only; NIC	1
007B		Refrigeration System –10°F	By Others – For Reference Only; NIC	1
008		Spare Number		N/A
009		Spare Number		N/A
010		Spare Number		N/A
011		Hand Sinks	By Others – For Ref. Only; NIC See Sht K-2 for balance of units	5
012	YES	Soap and Towel Dispensers	See Sheet K-2 for balance of units	5
013		Disposer	By Others – For Reference Only; NIC	1
014		Prep Sink	By Others – For Reference Only; NIC	1
015	YES	Food Processor		1
016		Spare Number		N/A
017		Spare Number		N/A
018		Spare Number		N/A
019		Spare Number		N/A
020		Spare Number		N/A
021		Spare Number		N/A
022		Worktable with Sink	By Others – For Reference Only; NIC	1
023		Spare Number		N/A
024		Utility Raceway in Production Kitchen	By Others – For Reference Only; NIC	1
025		Ventilator in Production Kitchen	By Others – For Reference Only; NIC	1
026		Fire Protection System in Production Kitchen	By Others – For Reference Only; NIC	1
027		Floor Trough in Production Kitchen	By Others – For Reference Only; NIC	3
028	YES	30-Gallon Tilting Skillet		1
029A	YES	40-Gallon Tilting Kettle		1
029B	YES	20-Gallon Tilting Kettle		1
030		Spare Number		N/A
031	YES	Convection Steamer		1
032	YES	Convection Oven		2
033	YES	Range/Oven		1
034	YES	Char-Broiler		1
035	YES	Fryer Assembly		1
036		Spare Number		N/A
037		Spare Number		N/A
038-095		See Sheet K-1.02		
096		Soiled Tray Conveyor	By Others – For Reference Only; NIC	1
097		Waste Collector	By Others – For Reference Only; NIC	1
098	YES	Mobile Trash Container		5
099		Soiled Dishtable	By Others – For Reference Only; NIC	1
100		Spare Number		N/A
101		Vent Ducts	By Others – For Reference Only; NIC	2
102		Dishmachine	By Others – For Reference Only; NIC	1
103		Booster Heater	By Others – For Reference Only; NIC	1
104		Clean Dishtable	By Others – For Reference Only; NIC	1
105	YES	Mobile Tray Dolly		2
106		Spare Number		N/A
107		Pot Washing Sink	By Others – For Reference Only; NIC	1
108		Disposer	By Others – For Reference Only; NIC	1

NIC – NOT IN CONTRACT

Drawings K-1 through K-8 are construction drawings for a building currently under construction. The final as-built kitchen/serving area conditions may differ slightly. Therefore, food service contractors for the procurement and installation of the shown equipment shall verify the required space and utilities prior to bid. Drawings K-1 through K-8 shall used in combination with the Equipment Description sheets and the Food Service Equipment technical specifications.
All new kitchen equipment which are part of this contract are indicated in the equipment schedule on drawings K-1 and K-2. See new kitchen equipment column.

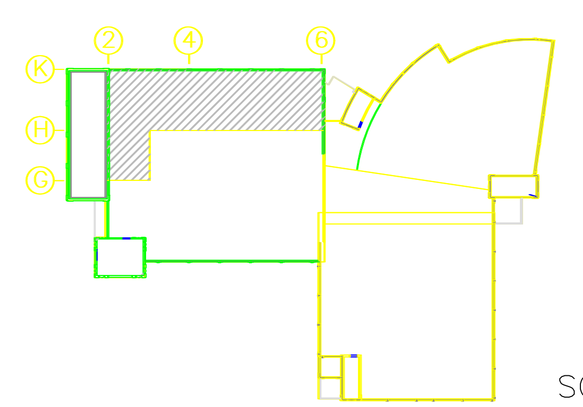

SCALE: 1:50

TRICON FOODSERVICE CONSULTANTS, INC.
380 MAPLE AVENUE WEST, SUITE L-5
VIENNA, VA 22180 USA
703 242-7020 FAX 242-7268

Security Consultant:
AMLICKE
ENGINEERING SERVICES INT'L
14500 Cortwright Way
Gaithersburg, MD 20878
Tel: 301.315.9677

Fire Protection Consultant:
ROLF JENSEN ASSOCIATES
3040 Williams Drive
Suite 400
Fairfax, VA 22301
Tel: 703.641.4600 Fax: 703.641.4608

Acoustics Consultant:
ACOUSTICAL
DESIGN COLLABORATIVE, LTD.
7509 L' Hirondelle Club Road
Ruxton, MD 21204
Tel: 410.821.5930 Fax: 410.821.5931

Food Service Consultant:
TRICON
FOODSERVICE CONSULTANTS, INC
380 Maple Avenue
Vienna, VA 22180
Tel: 703.242.7020 Fax: 703.242.7268

Civil Engineer:
CIVIL ENGINEER
AMORTON THOMAS INC.
12750 Twinbrook Parkway
Rockville, MD 20852
Tel: 301.881.2545

Mechanical, Electrical, & Plumbing Engineers:
ALLEN & SHARIFF
7061 Deepage Drive
Columbia, MD 21045
Tel: 410.381.7100
Fax: 410.381.7110

Structural Engineer:
CAGLEY & associates
6141 Executive Blvd.
Rockville, MD 20852
Tel.: (301) 881-9050
Fax.: (301) 881-1125

Architect:
BBGM
BRENNAN BEER GORMAN MONK/ ARCHITECTS & INTERIORS, P.L.L.C.
1030 15th Street, NW, Ste. 900
Washington DC 20005
Tel: 202.452.1644 Fax: 202.452.1647

SYM.	DESCRIPTION	DATE	APPROVED
	FINAL SUBMISSION/ISSUE FOR CONSTRUCTION	07/29/04	
	100% BELOW GRADE SUBMISSION	02/15/04	
	100% DESIGN SUBMISSION	02/03/04	

REVISIONS

Design Leader

BARCLAY WHITE COMMANDEY CONSTRUCTION

DR.	CK.	DATE	DATE	DR.	DATE	DR.	DATE	DATE	
CKD. BY	LDR	FILE	DATE	DATE	APPROVED				

FOR CONTRACT WORK

DEPARTMENT OF THE NAVY
NAVAL FACILITIES ENGINEERING COMMAND
WASHINGTON, DC
ENGINEERING FIELD ACTIVITY CHESAPEAKE
NAVAL STATION

NSWC, CARDEROCK DIVISION
WEST BETHESDA, MD
MARITIME TECHNOLOGY CENTER
INFORMATION

KITCHEN EQUIPMENT PLAN

CODE ID. NO. SIZE A1
EFD NO.
STA. PROJ. NO.
SPEC. NO. 2921-99-0117
CONSTR. CONTR. NO. N62477-03-C-0151
NAVFAC DRAWING NO. 3118172
MILCON # P-246
SHEET K-1 OF

A1 – 594 mm X 841 mm

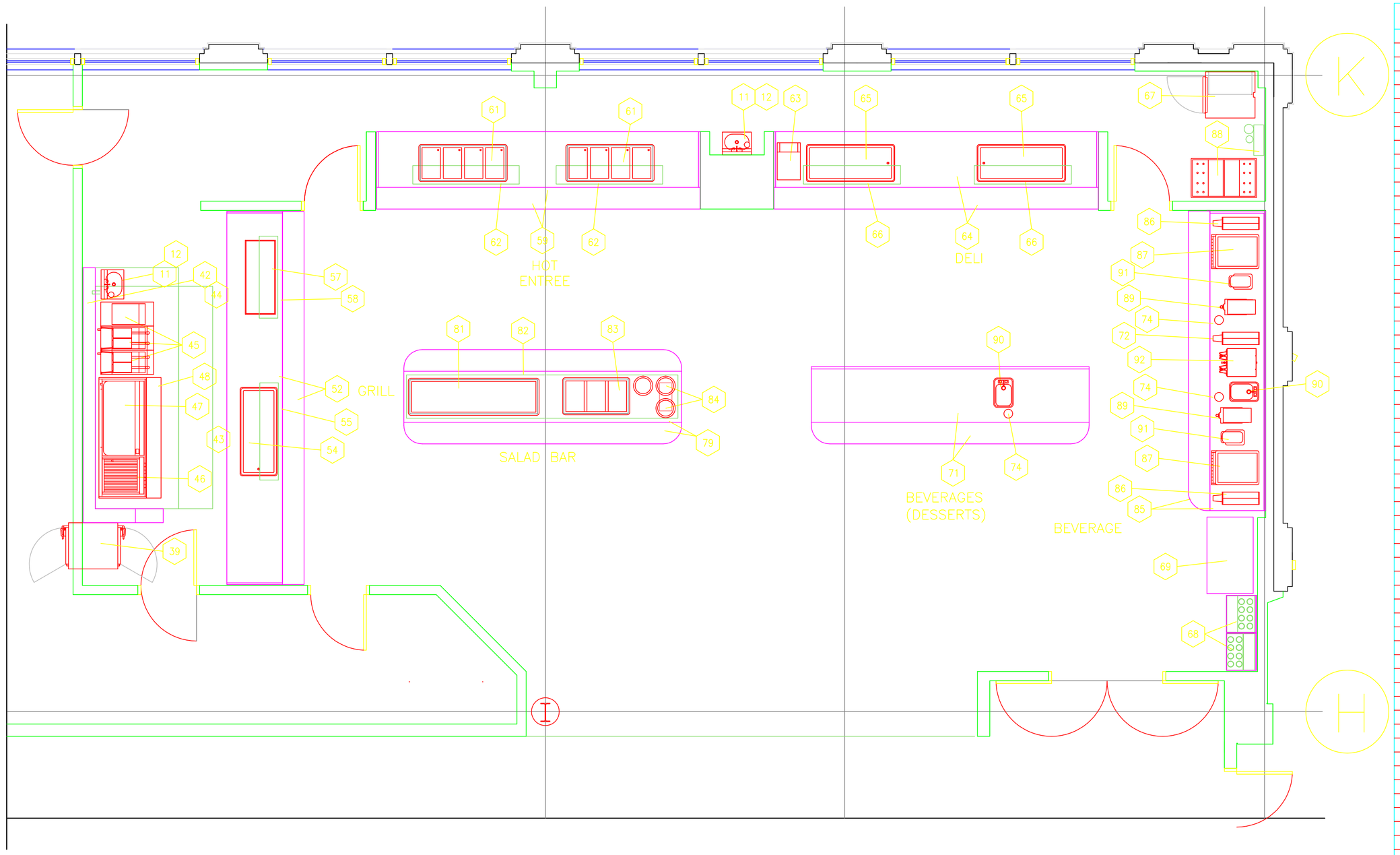

EQUIPMENT SCHEDULE

ITEM	NEW KITCHEN EQUIPMENT	DESCRIPTION	COMMENTS	QTY
001		See Sheet K-1	By Others – For Reference Only; NIC	
002		Spare Number		N/A
003-010		See Sheet K-1		
011		Hand Sinks	See Sheet K-1 for balance of units	5
012	YES	Soap and Towel Dispensers	See Sheet K-1 for balance of units	5
013-035		See Sheet K-1		
036		Spare Number		N/A
037		See Sheet K-1		
038		Spare Number		N/A
039	YES	Pass-Thru Refrigerator		1
040		Spare Number		N/A
041		Spare Number		N/A
042		Utility Raceway	By Others – For Reference Only; NIC	1
043		Exhaust Hood	By Others – For Reference Only; NIC	1
044		Fire Protection System	By Others – For Reference Only; NIC	1
045	YES	Fryer Assembly		1
046	YES	Char-Broiler		1
047	YES	Griddle		1
048	YES	Refrigerated Equipment Counter		1
049		Spare Number		N/A
050		Spare Number		N/A
051		Spare Number		N/A
052	YES	Grill Counter		1
053		Spare Number		N/A
054	YES	Refrigerated Cold Pan		1
055	YES	Sneeze Guard		1
056		Spare Number		N/A
057	YES	Drop-In Heated Shelf		1
058	YES	Food Protector		1
059	YES	Main Entree Counter		1
060		Spare Number		N/A
061	YES	Hot Food Wells		2
062	YES	Food Protectors		2
063	YES	Conveyor Toaster		1
064	YES	Deli Counter		1
065	YES	Refrigerated Cold Pan		2
066	YES	Food Protectors		2
067	YES	Reach-In Refrigerator		1
068	YES	Tray/Utensil Stand		2
069	YES	Air Screen Refrigerated Merchandiser		1
070		Spare Number		N/A
071	YES	Beverage/Dessert Counter		1
072	YES	Hot Cup Dispensers		1
073		Spare Number		N/A
074	YES	Scrap Chutes		3
075		Spare Number		N/A
076		Spare Number		N/A
077		Spare Number		N/A
078		Spare Number		N/A
079	YES	Soup/Salad Counter		1
080		Spare Number		N/A
081	YES	Refrigerated Cold Pan		1
082	YES	Sneeze Guard		1
083	YES	Hot Food Well		1
084	YES	Soup Wells		3
085	YES	Beverage Counter		1
086	YES	Cold Cup Dispensers		2
087		Ice/Soda Dispensers	By Snack Vendor; NIC	2
088		Bag-n-Box System	By Snack Vendor; NIC	1
089		Iced Tea Brewer	By Snack Vendor; NIC	2
090	YES	Countertop Sinks		2
091		Juice Dispenser	By Snack Vendor; NIC	2
092	YES	Coffee Brewer		1
093		Spare Number		N/A
094		Spare Number		N/A
095		Spare Number		N/A
096		See Sheet K-1	By Others – For Reference Only; NIC	

NIC – NOT IN CONTRACT

Drawings K-1 through K-8 are construction drawings for a building currently under construction. The final as-built kitchen/serving area conditions may differ slightly. Therefore, food service contractors for the procurement and installation of the shown equipment shall verify the required space and utilities prior to bid. Drawings K-1 through K-8 shall used in combination with the Equipment Description sheets and the Food Service Equipment technical specifications. See drawing K-1 for remaining new kitchen equipment.

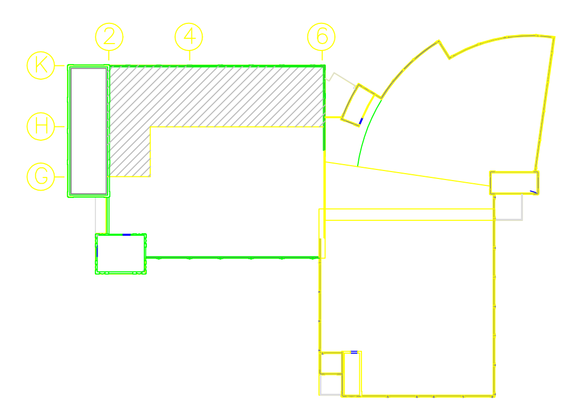

SCALE: 1:50

TRICON FOODSERVICE CONSULTANTS, INC.
380 MAPLE AVENUE WEST, SUITE L-5
VIENNA, VA 22180 USA
703 242-7020 FAX 242-7268

GRAPHIC SCALE1:50 mm
0 500 1000 2500 5000

N

Security Consultant:
AMLICKE ENGINEERING SERVICES INT'L
14500 Cartwright Way
Gaithersburg, MD 20878
Tel: 301.315.9677

Fire Protection Consultant:
ROLF JENSEN ASSOCIATES
3040 Williams Drive
Suite 400
Fairfax, VA 22301
Tel: 703.641.4600 Fax: 703.641.4608

Acoustics Consultant:
ACOUSTICAL DESIGN COLLABORATIVE, LTD.
7509 L' Hirondelle Club Road
Ruxton, MD 21204
Tel: 410.821.5930 Fax: 410.821.5931

Food Service Consultant:
TRICON FOODSERVICE CONSULTANTS, INC
380 Maple Avenue
Vienna, VA 22180
Tel: 703.242.7020 Fax: 703.242.7268

Civil Engineer:
CIVIL ENGINEER
A.MORTON THOMAS INC.
12750 Twinbrook Parkway
Rockville, MD 20852
Tel: 301.881.2545

Mechanical, Electrical, & Plumbing Engineers:
ALLEN & SHARIFF
7061 Deepage Drive
Columbia, MD 21045
Tel: 410.381.7100
Fax: 410.381.7110

Structural Engineer:
CAGLEY & associates
6141 Executive Blvd.
Rockville, MD 20852
Tel.: (301) 881-9050
Fax.: (301) 881-1125

Architect:
BBGM
BRENNAN BEER GORMAN MONK/ ARCHITECTS & INTERIORS, P.L.L.C.
1030 15th Street, NW, Ste. 900
Washington DC 20005
Tel: 202.452.1644 Fax: 202.452.1647

REVISIONS			
STA.	DESCRIPTION	DATE	APPROVED
	FINAL SUBMISSION/ISSUE FOR CONSTRUCTION	07/29/04	
	100% BELOW GRADE SUBMISSION	02/25/04	
	100% DESIGN SUBMISSION	02/03/04	

Design Builder
BARCLAY WHITE CONVERY CONSTRUCTION

0A	0A	401	402	403	404	405	DATE
CIC DESIGNED BY	LJP	TILE	CHK	DATE	PM	DATE	ENGINEER OF RECORD
FUNCTIONAL APPROVAL					APPROVED	DATE	

TFA FOR CONSTRUCTION WORK

DEPARTMENT OF THE NAVY
NAVAL STATION
NAVAL FACILITIES ENGINEERING COMMAND WASHINGTON, DC
ENGINEERING FIELD ACTIVITY CHESAPEAKE
NSWC, CARDEROCK DIVISION
WEST BETHESDA, MD
MARITIME TECHNOLOGY INFORMATION CENTER
SERVERY EQUIPMENT PLAN

CODE ID. NO.	SIZE A1
EFD NO.	
STA. PROJ. NO.	
SPEC. NO.	2921-99-0117
CONSTR. CONTR. NO.	N62477-03-C-0151
NAVFAC DRAWING NO.	3318178
MILCON #	P-246
SHEET	OF

K-2

A1 - 594 mm X 841 mm

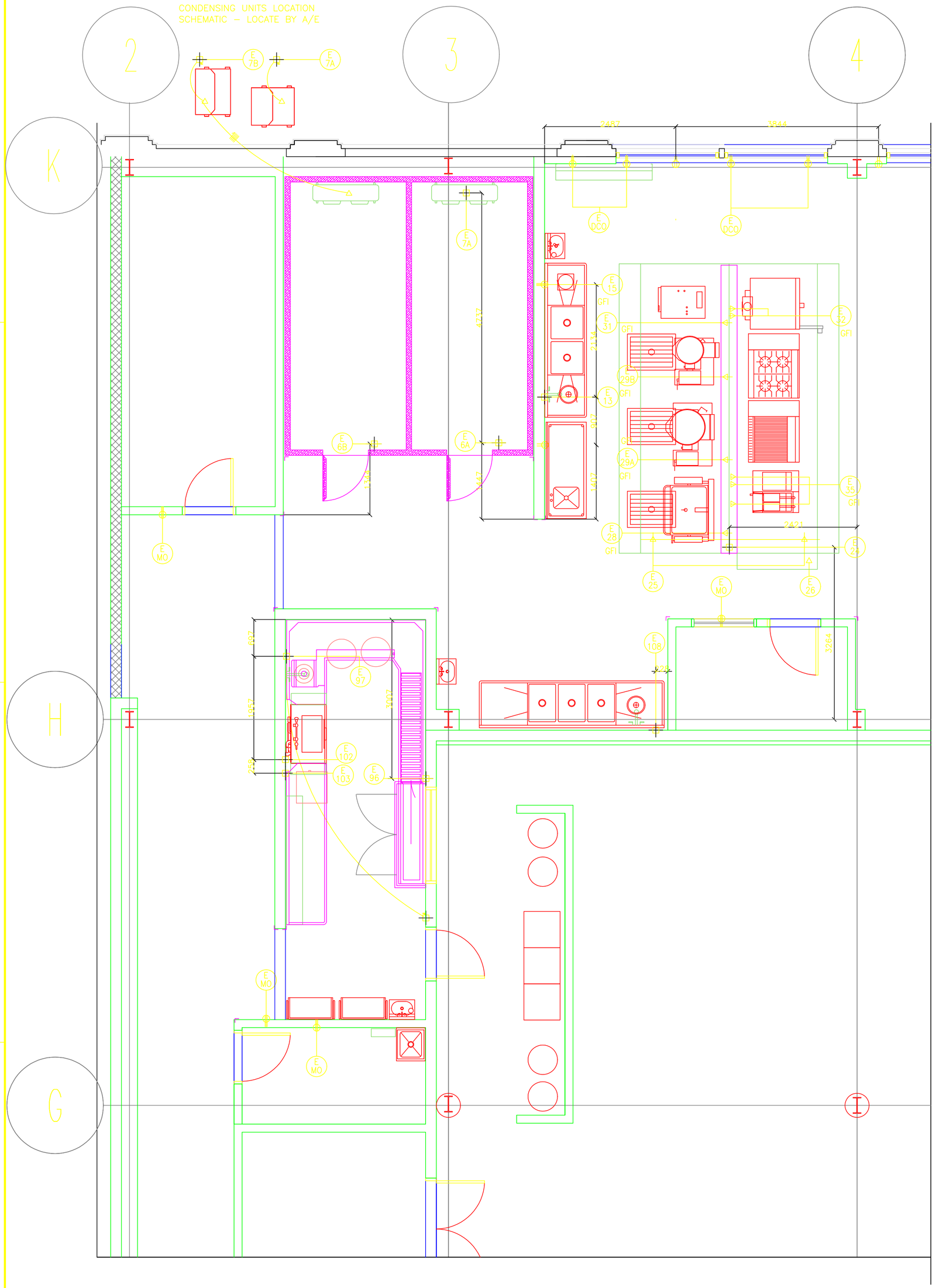

ELECTRICAL CONNECTION SCHEDULE

CONN.	ITEM	NEW KITCHEN EQUIPMENT	DESCRIPTION		TYPE	VOLTS	PH.	AMPS	KW	HP.	COMMENTS	AFF	AFF (mm)
EDCO			Convenience Outlet	NIC	DR	120	1	15.0				+48"	+1220
EMO			Maintenance Outlet	NIC	DR	120	1	15.0				+18"	+415
EO06A	006		Walk-In Cooler / Freezer	NIC	JB	120	1		800W		Cooler	DFA +102"	DFA +2600
EO06B	006		Walk-In Cooler / Freezer	NIC	JB	120	1		1.1		Freezer	DFA +102"	DFA +2600
EO07A	007A		Refrigeration System +35°F	NIC	DISC	208	3	10.6			Remote; Locate by A/E	Remote	Remote
EO07A	007A		Refrigeration System +35°F	NIC	JB	208	1	2.2			Cooler Coil	DFA +102"	DFA +2600
EO07B	007B		Refrigeration System -10°F	NIC	DISC	208	3	21.8			Remote; Locate by A/E	Remote	Remote
EO07B	007B		Refrigeration System -10°F	NIC	POC	208	3	8.6			Freezer coil; Power from compressor		
EO13	013		Disposer	NIC	JB	480	3			2.0	Connect to disc at +60" AFF	+12"	+305
EO15	015	YES	Food Processor		DR	120	1	12.8				+42"	+1070
EO16	016			NIC									
EO19	019			NIC									
EO23	023			NIC									
EO24	024		Utility Raceway	NIC	JB	120/208	3	100.0			5-Wire	DFA +112"	DFA +2850
EO25	024		Exhaust Hoods	NIC	POC	120	1		1,200W		Lights; From Utility Raceway Item 24		
EO26	026		Fire Protection System	NIC	POC	120	1	15.0			From Utility Raceway Item 24		
EO28	028	YES	30-Gallon Tilting Skillet		POC	120	1	3.0			From Utility Raceway Item 24		
EO29A	029A	YES	40-Gallon Tilting Kettle		POC	120	1	10.0			From Utility Raceway Item 24		
EO29B	029B	YES	20-Gallon Tilting Kettle		POC	120	1	5.0			From Utility Raceway Item 24		
EO31	031	YES	Convection Steamer		POC	120	1		35W		From Utility Raceway Item 24		
EO32	032	YES	Convection Oven		(2) POC	120	1	10.0 ea.			From Utility Raceway Item 24		
EO35	035	YES	FRYER ASSEMBLY		POC	120	1	7.0			Controls; From Utility Raceway, Item 24		
EO35	035	YES	FRYER ASSEMBLY		POC	120	1	9.0			Filter; From Utility Raceway Item 24		
EO35	035	YES	FRYER ASSEMBLY		POC	120	1	6.9			Heat lamp; From Utility Raceway Item 24		
EO96	096		Soiled Tray Conveyor	NIC	JB	208	1			3/4		+12"	+305
EO97	097		Disposer	NIC	JB	480	3			1.5	To DISC, +60"	+12"	+305
EO102	102		Dishmachine	NIC	JB	480	3	28.2				+12"	+305
EO103	103		Booster Heater	NIC	JB	480	3		27.0			+12"	+305
EO108	108		Disposer	NIC	JB	480	3			1.5		+12"	+305

Drawings K-1 through K-8 are construction drawings for a building currently under construction. The final as-built kitchen/serving area conditions may differ slightly. Therefore, food service contractors for the procurement and installation of the shown equipment shall verify the required space and utilities prior to bid. Drawings K-1 through K-8 shall used in combination with the Equipment Description sheets and the Food Service Equipment technical specifications.

ELECTRICAL ROUGH-IN NOTES

1. THIS IS A ROUGH-IN DRAWING. THESE DIMENSIONED ROUGH-IN AND SLEEVE DRAWINGS MUST BE FIELD VERIFIED PRIOR TO CONTRACT BID. EQUIPMENT CONNECTIONS ARE COMPLETELY ROUGHED-IN AND WIRED, AND COVER PLATES ON ROUGH-IN POINTS.
2. APPROXIMATE DIMENSIONS ARE GIVEN FROM FINISHED FACE OF WALL, FLOORS, OR COLUMN CENTER LINES.
3. SERVICES SHOWN RELATE ONLY TO FOOD SERVICE EQUIPMENT REQUIREMENTS ONLY AND SHOW WHERE THE UTILITIES ARE TO BE CONNECTED.
4. FOOD SERVICE CONTRACTOR IS RESPONSIBLE FOR:
   - ALL WIRING, FITTINGS, AND LABOR FROM ROUGH-IN UP TO AND INCLUDING FINAL CONNECTIONS TO NEW KITCHEN EQUIPMENT.
   - PROVISION OF AREA SUB-PANELS OR PLUG-IN POWER SUPPLY IN LIEU OF DISCONNECT SWITCHES WHEREVER POSSIBLE.
   - ROUGH-IN OF ALL CONVIENCE OUTLETS, IF REQUIRED.
5. FOOD SERVICE CONTRACTOR IS RESPONSIBLE FOR COORDINATION/REVISION OF UTILITY CONNECTIONS FOR ANY FOOD SERVICE EQUIPMENT SUBSTITUTED FOR THE MANUFACTURER AND MODEL NUMBER SPECIFIED.
6. FOOD SERVICE CONTRACTOR SHALL VERIFY ELECTRICAL AVAILIBILITY AND ABILITY FOR INSTALLATION PER DRAWINGS.

ELECTRICAL SYMBOLS

E		ELECTRICAL REFERENCE SYMBOL
	JB	JUNCTION BOX
	DISC	DISCONNECT
	SR	SINGLE RECEPTACLE
	DR	DUPLEX RECEPTACLE
	RFO	RECESSED FLOOR OUTLET
	V	VOLTS
	Ø	PHASE
	A	AMPS
	KW	KILOWATTS
	IC	EQUIPMENT UTILITY INTERCONNECTION
	FS	FLOOR STUB (HOLD TO +6")
	HP	HORSEPOWER
		INCANDESCENT LIGHT (BY KEC)
F		FLUORESCENT LIGHT (BY KEC)
	SW	SWITCH (BY C.C.)
	EP	ELECTRICAL SUBPANEL (BY KEC) (BUILT-IN ONLY)
	POC	POINT OF CONNECTION, BRANCH FROM ADJACENT STUB
	DCO	CONVENIENCE OUTLET, DUPLEX RECEPTACLE, 120V, +48"
	CO	CONVENIENCE OUTLET, DUPLEX RECEPTACLE, 120V, +36"
	MO	MAINTENANCE OUTLET, DUPLEX RECEPTACLE, 120V, +24"
	SO	SPECIAL OUTLET
T	TEL	TELEPHONE CONNECTION
	GFI	GROUND FAULT INTERRUPTER
	IGR	ISOLATED GROUND RECEPTACLE
	DFA+	ROUGH-IN MADE DOWN TO DISTANCE A.F.F. FROM ABOVE
	NIC	NOT IN CONTRACT

NOT ALL SYMBOLS ARE USED

SCALE: 1:50

TRICON FOODSERVICE CONSULTANTS, INC.
380 MAPLE AVENUE WEST, SUITE L-5
VIENNA, VA 22180 USA
703 242-7020 FAX 242-7268

GRAPHIC SCALE1:50 mm
0 500 1000 2500 5000

N

Security Consultant:
AMLICKE
ENGINEERING SERVICES INT'L
14500 Cortwright Way
Gaithersburg, MD 20878
Tel: 301.315.9677

Fire Protection Consultant:
ROLF JENSEN ASSOCIATES
3040 Williams Drive
Suite 400
Fairfax, VA 22301
Tel: 703.641.4600 Fax: 703.641.4608

Acoustics Consultant:
ACOUSTICAL
DESIGN COLLABORATIVE, LTD.
7509 L' Hirondelle Club Road
Ruxton, MD 21204
Tel: 410.821.5930 Fax: 410.821.5931

Food Service Consultant:
TRICON
FOODSERVICE CONSULTANTS, INC
380 Maple Avenue
Vienna, VA 22180
Tel: 703.242.7020 Fax: 703.242.7268

Civil Engineer:
CIVIL ENGINEER
AMORTON THOMAS INC.
12750 Twinbrook Parkway
Rockville, MD 20852
Tel: 301.881.2545

Mechanical, Electrical, & Plumbing Engineers:
ALLEN & SHARIFF
7061 Deepage Drive
Columbia, MD 21045
Tel: 410.381.7100
Fax: 410.381.7110

Structural Engineer:
CAGLEY & associates
6141 Executive Blvd.
Rockville, MD 20852
Tel.: (301) 881-9050
Fax.: (301) 881-1125

Architect:
BBGM
BRENNAN BEER GORMAN MONK/ ARCHITECTS & INTERIORS, P.L.L.C.
1030 15th Street, NW, Ste. 900
Washington DC 20005
Tel: 202.452.1644 Fax: 202.452.1647

SYM.	DESCRIPTION	DATE	APPROVED
	FINAL SUBMISSION/ISSUE FOR CONSTRUCTION	07/29/04	
	100% BELOW GRADE SUBMISSION	02/15/04	
	100% DESIGN SUBMISSION	02/03/04	

REVISIONS

Design Builder

BARCLAY WHITE COMMERCIAL CONSTRUCTION

CKD.		DATE		DATE		DATE		DATE
CKD.		DATE		DATE		DATE		DATE
CKD.		DATE		DATE		DATE		DATE
CKD.		DATE		DATE		DATE		DATE

CKD. CHECKED BY | DR. DRAWN BY | CHK. CHECKED | DATE | APPROVED | FUNCTIONAL SIGNOFF | DATE | APPROVED | DATE | EFF FOR CONSTRUCTION, NAVFAC

SYM.

DEPARTMENT OF THE NAVY
NAVAL FACILITIES ENGINEERING COMMAND
WASHINGTON, DC

ENGINEERING FIELD ACTIVITY CHESAPEAKE
NAVAL STATION

NSWC, CARDEROCK DIVISION
WEST BETHESDA, MD

MARITIME TECHNOLOGY CENTER INFORMATION

ELECTRICAL ROUGH-IN PLAN

CODE ID. NO. | SIZE A1
EFD NO.
STA. PROJ. NO.
SPEC. NO. 2921-99-0117
CONSTR. CONTR. NO. N62477-03-C-0151
NAVFAC DRAWING NO. 3318174
MILCON # P-246
SHEET K-3 OF

REVDATE

A1 = 594 mm X 841 mm

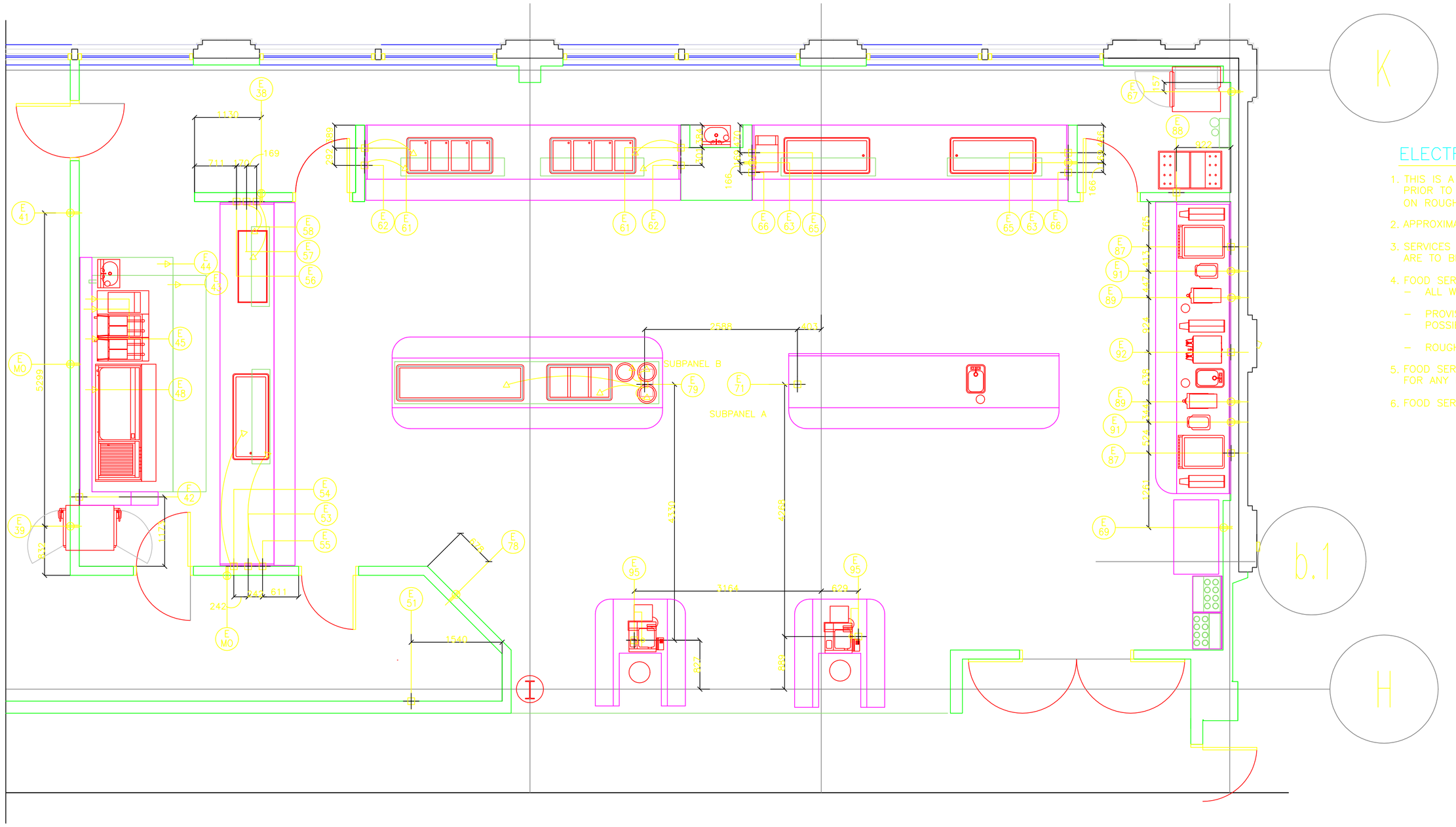

ELECTRICAL ROUGH-IN NOTES

1. THIS IS A ROUGH-IN DRAWING. THESE DIMENSIONED ROUGH-IN AND SLEEVE DRAWINGS MUST BE FIELD VERIFIED PRIOR TO CONTRACT BID. EQUIPMENT CONNECTIONS ARE COMPLETELY ROUGHED-IN AND WIRED, AND COVER PLATES ON ROUGH-IN POINTS.
2. APPROXIMATE DIMENSIONS ARE GIVEN FROM FINISHED FACE OF WALL, FLOORS, OR COLUMN CENTER LINES.
3. SERVICES SHOWN RELATE ONLY TO FOOD SERVICE EQUIPMENT REQUIREMENTS ONLY AND SHOW WHERE THE UTILITIES ARE TO BE CONNECTED.
4. FOOD SERVICE CONTRACTOR IS RESPONSIBLE FOR:
   - ALL WIRING, FITTINGS, AND LABOR FROM ROUGH-IN UP TO AND INCLUDING FINAL CONNECTIONS TO EQUIPMENT.
   - PROVISION OF AREA SUB-PANELS OR PLUG-IN POWER SUPPLY IN LIEU OF DISCONNECT SWITCHES WHEREVER POSSIBLE.
   - ROUGH-IN OF ALL CONVIENCE OUTLETS, IF REQUIRED.
5. FOOD SERVICE CONTRACTOR IS RESPONSIBLE FOR COORDINATION/REVISION OF UTILITY CONNECTIONS FOR ANY FOOD SERVICE EQUIPMENT SUBSTITUTED FOR THE MANUFACTURER AND MODEL NUMBER SPECIFIED.
6. FOOD SERVICE CONTRACTOR SHALL VERIFY ELECTRICAL AVAILIBILITY AND ABILITY FOR INSTALLATION PER DRAWINGS.

ELECTRICAL CONNECTION SCHEDULE

CONN.	ITEM	NEW KITCHEN EQUIPMENT	DESCRIPTION		TYPE	VOLTS	PH.	AMPS	KW	HP	COMMENTS	AFF	AFF (mm)
E038	038											DFA +86"	DFA +86"
E039	039	YES	Pass-Thru Refrigerator		DR	120	1	10.4			On kitchen side	+86"	+2185
E041	041			NIC									
E042	042		Utility Raceway	NIC	JB	120/208	3	75.0			5-Wire	DFA +112"	DFA +2845
E043	043		Exhaust Hood	NIC	POC	120	1	Vfy.			From UDS, Item 42		
E044	044		Fire Protection System	NIC	POC	120	1	Vfy.			From UDS, Item 42		
E045	045	YES	Fryer Assembly		POC	120	1	9.0			Filter; From UDS, Item 42		
E045	045	YES	Fryer Assembly		POC	120	1	9.0			Filter; From UDS, Item 42		
E045	045	YES	Fryer Assembly		POC	120	1	6.9			Heat lamp; From UDS, Item 42		
E048	048	YES	Refrigerated Base		POC	120	1	8.0			From UDS, Item 42		
E051	051			NIC									
E053	053			NIC									
E054	054	YES	Refrigerated Cold Pan		JB	120	1	6.8				+12"	+305
E055	055	YES	Sneeze Guard		JB	120	1		150W			+12"	+305
E056	056			NIC									
E057	057	YES	Drop-In Heated Shelf		JB	120	1	8.3				+12"	+305
E058	058	YES	Food Protector		JB	120	1		1.34			+12"	+305
E061	061	YES	Hot Food Wells		(2) JB	120	1		3.4			+12"	+305
E062	062	YES	Food Protector		JB	120	1		1.34			+12"	+305
E063	063	YES	Conveyor Toaster		DR	120	1		1.6			+40"	+1020
E065	065	YES	Refrigerated Cold Pan		JB	120	1	6.8				+12"	+305
E066	066	YES	Food Protectors		JB	120	1		300W			+12"	+305
E067	067	YES	Reach-In Refrigerator		DR	120	1	7.0				+86"	+2185
E069	069	YES	Air Screen Refrigerated Merchandiser		SR	120/208	3	100.0				+24"	+610
E071	071	YES	Dessert Counter		JB	120/208	1	25.8			Subpanel A	Floor stub	Floor stub
E075	075			NIC									
E076	076			NIC									
E077	077			NIC									
E078	078			NIC									
E079	079	YES	Soup/Salad Counter		JB	120/208	1	75.0			Subpanel B	Floor stub	Floor stub
E081	081	YES	Refrigerated Cold Pan		POC	120	1	9.8			From Subpanel B		
E082	082	YES	Sneeze Guard		POC	120	1		350W		From Subpanel B		
E083	083	YES	Hot Food Well		POC	208	1		2.5		From Subpanel B		
E084	084	YES	Soup Wells		POC	120	1		500W ea.		From Subpanel B		
E087	087		Ice/Soda Dispensers	NIC	JB	120	1	20.0				+48"	+1220
E088	088		Bag-in-Box System	NIC	JB	120	1	15.0				+36"	+915
E089	089		Iced Tea Brewer	NIC	DR	120	1		1.775			+48"	+1220
E091	091		Juice Dispenser	NIC	SR	120	1	15.0				+48"	+1220
E092	092	YES	Coffee Brewer		JB	120/208	1	28.9				+48"	+1220
E095	095		Cash Register	NIC	JB	120	1	6.0				Floor stub	Floor stub
E095	095		Cash Register	NIC	SO						1/2" EMT to remote CPU	Floor stub	Floor stub

ELECTRICAL SYMBOLS

E		ELECTRICAL REFERENCE SYMBOL
	JB	JUNCTION BOX
	DISC	DISCONNECT
	SR	SINGLE RECEPTACLE
	DR	DUPLEX RECEPTACLE
	RFD	RECESSED FLOOR OUTLET
	V	VOLTS
	Ø	PHASE
	A	AMPS
	KW	KILOWATTS
	IC	EQUIPMENT UTILITY INTERCONNECTION
	FS	FLOOR STUB (HOLD TO +6")
	HP	HORSEPOWER
		INCANDESCENT LIGHT (BY KEC)
F		FLUORESCENT LIGHT (BY KEC)
S	SW	SWITCH (BY G.C.)
	EP	ELECTRICAL SUBPANEL (BY KEC) (BUILT-IN ONLY)
	POC	POINT OF CONNECTION, BRANCH FROM ADJACENT STUB
	DCO	CONVENIENCE OUTLET, DUPLEX RECEPTACLE, 120V, +48"
	CO	CONVENIENCE OUTLET, DUPLEX RECEPTACLE, 120V, +36"
	MO	MAINTENANCE OUTLET, DUPLEX RECEPTACLE, 120V, +24"
	SO	SPECIAL OUTLET
T	TEL	TELEPHONE CONNECTION
	GFI	GROUND FAULT INTERRUPTER
	IGR	ISOLATED GROUND RECEPTACLE
	DFA+	ROUGH-IN MADE DOWN TO DISTANCE A.F.F. FROM ABOVE
	NIC	NOT IN CONTRACT

NOT ALL ELECTRICAL SYMBOLS ARE USED.

SCALE: 1:50

TRICON FOODSERVICE CONSULTANTS, INC.
380 MAPLE AVENUE WEST, SUITE L-5
VIENNA, VA 22180 USA
703 242-7020 FAX 242-7268

GRAPHIC SCALE 1:50 mm
0 500 1000 2500 5000

N

Security Consultant:
AMLICKE
ENGINEERING SERVICES INT'L
14500 Cartwright Way
Gaithersburg, MD 20878
Tel: 301.315.9677

Fire Protection Consultant:
ROLF JENSEN ASSOCIATES
3040 Williams Drive
Suite 400
Fairfax, VA 22301
Tel: 703.641.4600 Fax: 703.641.4608

Acoustics Consultant:
ACOUSTICAL
DESIGN COLLABORATIVE, LTD.
7509 L' Hirondelle Club Road
Ruxton, MD 21204
Tel: 410.821.5936 Fax: 410.821.5931

Food Service Consultant:
TRICON
FOODSERVICE CONSULTANTS, INC
380 Maple Avenue
Vienna, VA 22180
Tel: 703.242.7020 Fax: 703.242.7268

Civil Engineer:
CIVIL ENGINEER
A.MORTON THOMAS INC.
12750 Twinbrook Parkway
Rockville, MD 20852
Tel: 301.881.2545

Mechanical, Electrical, & Plumbing Engineers:
ALLEN & SHARIFF
7061 Deepage Drive
Columbia, MD 21045
Tel: 410.381.7100
Fax: 410.381.7110

Structural Engineer:
CAGLEY & associates
6141 Executive Blvd.
Rockville, MD 20852
Tel.: (301) 881-9050
Fax.: (301) 881-1125

Architect:
BBGM
BRENNAN BEER GORMAN MONK/ ARCHITECTS & INTERIORS, P.L.L.C.
1030 15th Street, NW, Ste. 900
Washington DC 20005
Tel: 202.452.1644 Fax: 202.452.1647

REVISIONS			
SYM.	DESCRIPTION	DATE	APPROVED
	FINAL SUBMISSION/ISSUE FOR CONSTRUCTION	07/29/04	
	100% BELOW GRADE SUBMISSION	02/25/04	
	100% DESIGN SUBMISSION	02/03/04	

Design Leader

BARCLAY WHITE
CONVERT TO
CONSTRUCTION

CKD					
CHECKED BY	CR	TLC	DATE	TLC	DATE
FUNCTIONAL DIVISIONAL			DATE		DATE
APPROVED					

CKD		CKD		CKD	
DESIGNED BY		DESIGNED BY		DESIGNED BY	

DEPARTMENT OF THE NAVY
NAVAL FACILITIES ENGINEERING COMMAND
WASHINGTON, DC
ENGINEERING FIELD ACTIVITY CHESAPEAKE
NAVAL STATION

NSWC, CARDEROCK DIVISION
WEST BETHESDA, MD
MARITIME TECHNOLOGY CENTER INFORMATION
ELECTRICAL ROUGH-IN PLAN

CODE ID. NO.	SIZE A1
EFD. NO.	
STA. PROJ. NO.	
SPEC. NO.	2921-99-0117
CONSTR. CONTR. NO.	N62477-03-C-0151
NAVFAC DRAWING NO.	3318178
MILCON # P-246	
SHEET	OF

K-4

A1 - 594 mm X 841 mm

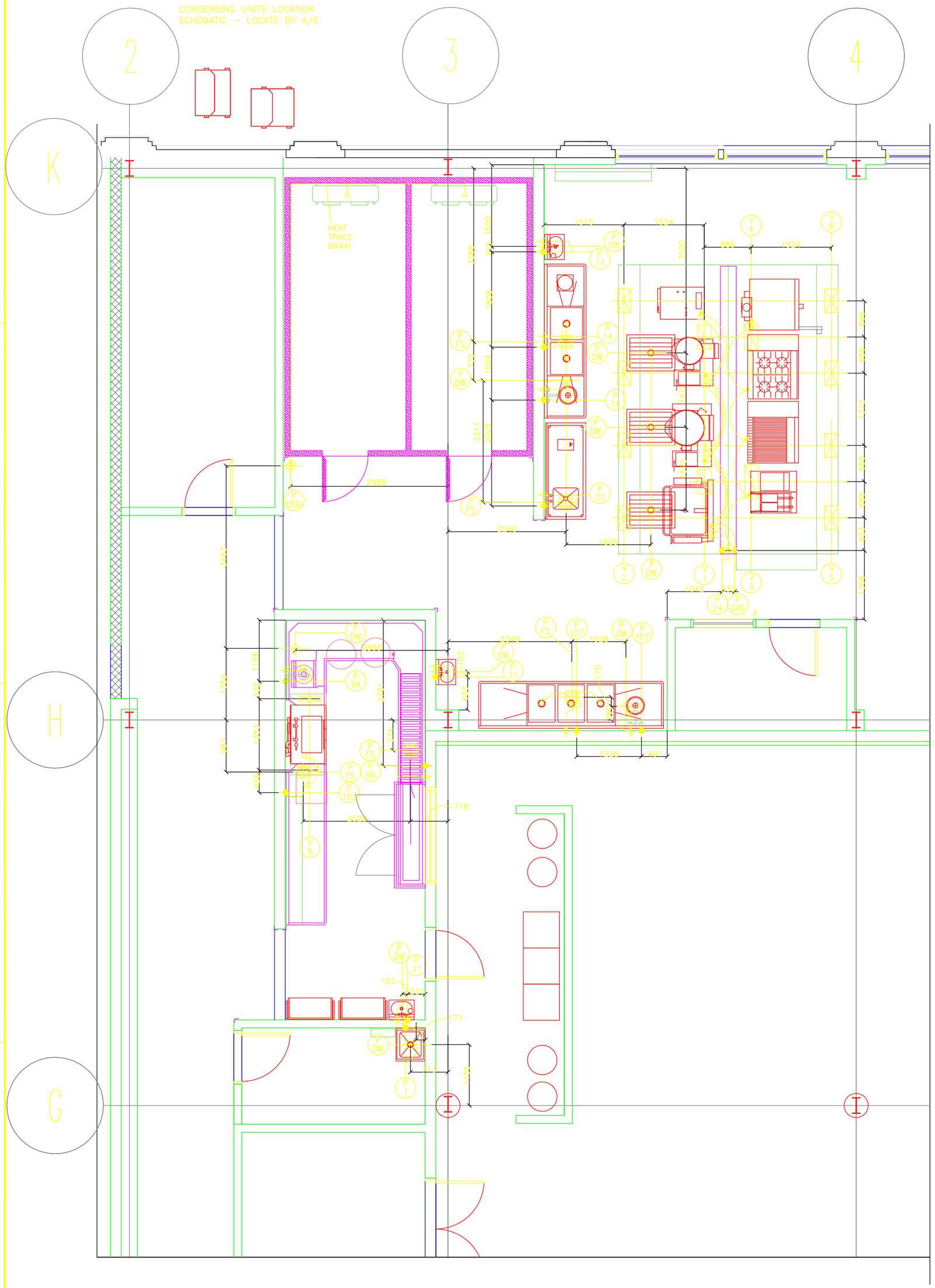

PLUMBING SCHEDULE

CONN.	ITEM	NEW KITCHEN EQUIPMENT	DESCRIPTION	HW	HW (mm)	CW	CW (mm)	WASTE	WASTE (mm)
P001	001		Mop Sink and Rack – NIC	1/2", +24"	12.5, +610	1/2", +24"	12.5, +610	DW, 3"	DW, 75
P007	007		Refrigeration System +35°F – NIC					IW, 1", to OSD	IW, 25, to OSD
P007	007		Refrigeration System –10°F – NIC					IW, 1", to OSD	IW, 25, to OSD
P011	011		Hand Sinks – NIC	1/2", +37"	12.5, +940	1/2", +37"	12.5, +940	DW, 1–1/2", +24–1/2"	DW, 38, +625
P013	013		Disposer – NIC			1/2", POC	12.5, POC	DW, 2", to 3" tight waste	DW, 50, to 75 tight waste
P014	014		Prep Sink – NIC	(2) 1/2", +12"	(2) 12.5, +305	(2) 1/2", +12"	(2) 12.5, +305	(2) IW, 1–1/2", to FS	(50) IW, 38, to FS
P022	022		Worktable with Sink – NIC	1/2", +12"	12.5, +305	1/2", +12"	12.5, +305	IW, 1–1/2", to FS	IW, 38, to FS
P024	024		Utility Raceway – NIC	1/2", +112"	12.5, +2845	1/2", +112"	12.5, +2845		
P027	027		Floor Trough – NIC					DW, 3"	DW, 75
P028	028	YES	30–Gallon Tilting Skillet	1/2", POC	12.5, POC	1/2", POC	12.5, POC	IW, to FTD	IW, to FTD
P029A	029A	YES	40–Gallon Tilting Kettle	1/2", POC	12.5, POC	1/2", POC	12.5, POC	IW, to FTD	IW, to FTD
P029B	029B	YES	20–Gallon Tilting Kettle	1/2", POC	12.5, POC	1/2", POC	12.5, POC	IW, to FTD	IW, to FTD
P031	031	YES	Convection Steamer			1/2", POC	12.5, POC	IW, 1–1/4", to FS	IW, 30, to FS
P096	096		Soiled Troy Conveyor – NIC	3/4", +12"	20, +305	3/4", +12"	20, +305	IW, 1–1/2", to FS	IW, 38, to FS
P097	097		Disposer – NIC			1/2", POC	12.5, POC	DW, 2", to 3" tight waste	DW, 50, to 75 tight waste
P099	099		Soiled Dishtable – NIC	1/2", +12"	12.5, +305	1/2", +12"	12.5, +305	IW, 1–1/2", to FS	IW, 38, to FS
P102	102		Dishmachine – NIC	3/4", POC	20, POC			IW, 2", to FS	IW, 50, to FS
P103	103		Booster Heater – NIC	3/4", +12"	20, +305			IW, 1", to FS	IW, 25, to FS
P107	107		Pot Washing Sink – NIC	(2) 1/2", +12"	(2) 12.5, +305	(2) 1/2", +12"	(2) 12.5, +305	(3) IW, 1–1/2", to FS	(3) IW, 38, to FS
P108	108		Disposer – NIC			1/2", POC	12.5, POC	DW, 2", to 3" tight waste	DW, 50, to 75 tight waste

GAS CONNECTION SCHEDULE

CONN.	ITEMS	NEW KITCHEN EQUIPMENT	DESCRIPTION	SIZE	SIZE (mm)	MBTUH	COMMENT	AFF
PGasA			Gas Drop – NIC	1–1/4"	32	1076	Utility Raceway Item 24	DFA ceiling line
G028	028	YES	30–Gallon Tilting Skillet	3/4"	20	91	PGas A	POC
G029A	029	YES	40–Gallon Tilting Kettle	1/2"	12.5	140	PGas A	POC
G029B	029	YES	20–Gallon Tilting Kettle	1/2"	12.5	72	PGas A	POC
G030	030		– NIC					
G031	031	YES	Convection Steamer	1/2"	12.5	125	PGas A	POC
G032	032	YES	Convection Oven	3/4"	20	110	PGas A	POC
G033	033	YES	Range/Oven	3/4"	20	180	PGas A	POC
G034	034	YES	Char–Broiler	3/4"	20	90	PGas A	POC
G035	035	YES	Fryer Assembly	3/4"	20	80	PGas A	POC

All required utilities (gas, electric, and water) shall be field verified for their existance, accessibility and location. All new kitchen equipment shall be field verified for location and actual space requirement.

Original Building Construction Notes – For Information Only

GENERAL CONTRACTOR SHALL ROUGH–IN MAIN KITCHEN GAS DROPS AND CAP OFF. FIRE SYSTEM INSTALLER SHALL PROVIDE AND INSTALL GAS SHUTOFF VALVE AND CONNECT TO FIRE SYSTEM.

GENERAL CONTRACTOR TO PROVIDE A QUICK–OPENING VALVE AT +6'–6" IN ALL KITCHEN GAS DROPS AND CAP–OFF.

GENERAL CONTRACTOR SHALL EXTEND AND MAKE–UP TO EQUIPMENT AFTER EQUIPMENT IS SET IN PLACE, FORMING GAS MANIFOLD LOOP TO EQUALIZE PRESSURE. K.E.C. SHALL PROVIDE ALL GAS PRESSURE REGULATORS REQUIRED BY EQUIPMENT.

ORIGINAL PLUMBING ROUGH–IN NOTES – FOR INFORMATION ONLY

1. THIS IS A ROUGH–IN DRAWING. DIMENSIONED ROUGH–IN AND SLEEVE DRAWINGS MUST BE FIELD VERIFIED.
2. APPROXIMATE DIMENSIONS ARE GIVEN FROM FINISHED FACE OF WALLS, FLOOR, OR COLUMN CENTER LINES.
3. SERVICES SHOWN RELATE TO FOOD SERVICE REQUIREMENTS ONLY AND SHOW WHERE UTILITIES ARE TO BE STUBBED–IN.
4. GENERAL CONTRACTOR IS RESPONSIBLE FOR:
   - ALL WATER, HOT WATER (140°F.), WASTE, GAS, STEAM, AND HVAC SERVICE TO EQUIPMENT, INCLUDING PIPING FITTINGS, SLEEVES, STOPS, VALVES, TRAPS, CLEANOUTS, INSULATION, AND HARDWARE UP TO AND INCLUDING FINAL CONNECTIONS TO EQUIPMENT.
   - PROVISION OF ALL EXPOSED PIPING AND FITTINGS IN CHROME OR STAINLESS STEEL IN KITCHEN.
   - INDIVIDUALLY VALVING EACH SUPPLY CONNECTION.
   - INTERCONNECTING VENTILATORS AND CONTROL PANELS, DETERGENT SYSTEMS, WASTE DISPOSER SYSTEMS, AND WAREWASHER BOOSTER HEATER.
   - INDIRECT WASTE LINES FROM WALK–IN REFRIGERATOR AND FREEZER COILS, INCLUDING 36 WATT/LINEAR FOOT HEAT TAPE AND INSULATION INSIDE FREEZERS; SET LINES SECURELY AND 3/4" CLEAR OF WALLS.
   - PROVIDING ALL GREASE INTERCEPTORS.
5. KEC IS RESPONSIBLE FOR COORDINATION/REVISION OF CONNECTIONS FOR ANY FOOD SERVICE EQUIPMENT SUBSTITUTED IN PLACE OF THE MANUFACTURER AND MODEL NUMBER SPECIFIED IN THE PROPOSAL.

PLUMBING/MECHANICAL SYMBOLS

	PLUMBING REFERENCE SYMBOL
	VENTILATION REFERENCE SYMBOL
IC	EQUIPMENT UTILITY INTERCONNECTION
CW	COLD WATER
HW	HOT WATER
DW	DIRECT OR TIGHT WASTE
PVC	6" OPEN PVC CONDUIT
EMT	6" OPEN EMT CONDUIT
AFD	4" AREA FLOOR DRAIN (CONVENIENCE) FLUSH TO FLOOR
FTD	4" FUNNEL FLOOR DRAIN, FLUSH TO FLOOR
FS	4" FLOOR SINK, FLUSH TO FLOOR
OSD	4" OPEN SITE DRAIN (HUB) WITH STRAINER
G	GAS ROUGH–IN DFA+
MBTUH	1000 BTU PER HOUR
DFA+	ROUGH–IN MADE TO DISTANCE AFF FROM ABOVE
PRV	PRESSURE RELIEF VALVE
POC	POINT OF CONNECTION, BRANCH FROM ADJACENT STUB
W/D	WASHER/DRYER SET, LAUNDRY BOX
FTD	FLOOR TRENCH DRAIN (3" DW) FLUSH TO FLOOR
HS	HAND SINK GROUP
	EXHAUST FLUE/RISER (NO FAN)
	VENTILATION SUPPLY DUCT
	VENTILATION EXHAUST DUCT
GAV	GENERAL AREA VENT, BY G.C.

SCALE: 1:50

TRICON FOODSERVICE CONSULTANTS, INC.
380 MAPLE AVENUE WEST, SUITE L-5
VIENNA, VA 22180 USA
703 242-7020 FAX 242-7268

GRAPHIC SCALE1:50 mm
0 500 1000 2500 5000

N

Security Consultant:
AMLICKE
ENGINEERING SERVICES INT'L
14500 Cartwright Way
Gaithersburg, MD 20878
Tel: 301.315.9677

Fire Protection Consultant:
ROLF JENSEN ASSOCIATES
3040 Williams Drive
Suite 400
Fairfax, VA 22301
Tel: 703.641.4600 Fax: 703.641.4608

Acoustics Consultant:
ACOUSTICAL
DESIGN COLLABORATIVE, LTD.
7509 L' Hirondelle Club Road
Ruxton, MD 21204
Tel: 410.821.5930 Fax: 410.821.5931

Food Service Consultant:
TRICON
FOODSERVICE CONSULTANTS, INC
380 Maple Avenue
Vienna, VA 22180
Tel: 703.242.7020 Fax: 703.242.7268

Civil Engineer:
CIVIL ENGINEER
A.MORTON THOMAS INC.
12750 Twinbrook Parkway
Rockville, MD 20852
Tel: 301.881.2545

Mechanical, Electrical, & Plumbing Engineers:
ALLEN & SHARIFF
7061 Deepage Drive
Columbia, MD 21045
Tel: 410.381.7100
Fax: 410.381.7110

Structural Engineer:
CAGLEY & associates
6141 Executive Blvd.
Rockville, MD 20852
Tel.: (301) 881–9050
Fax.: (301) 881–1125

Architect:
BBGM
BRENNAN BEER GORMAN MONK/ ARCHITECTS & INTERIORS, P.L.L.C.
1030 15th Street, NW, Ste. 900
Washington DC 20005
Tel: 202.452.1644 Fax: 202.452.1647

SYM.	DESCRIPTION	DATE	APPROVED
	FINAL SUBMISSION/ISSUE FOR CONSTRUCTION	07/29/04	
	100% BELOW GRADE SUBMISSION	02/25/04	
	100% DESIGN SUBMISSION	02/03/04	

REVISIONS

Design Builder

BARCLAY WHITE
COMMUNICATIONS
CONSTRUCTION

DR.	CK.				
CHECKED BY	DR.	TEC	DRK	DWC	FGB
DIRECTORAL APPROVAL				DATE	DWB
APPROVED					

ESTIMATOR DATE

DEPARTMENT OF THE NAVY NAVAL FACILITIES ENGINEERING COMMAND WASHINGTON, DC
ENGINEERING FIELD ACTIVITY CHESAPEAKE
NAVAL STATION

NSWC, CARDEROCK DIVISION
WEST BETHESDA, MD
MARITIME TECHNOLOGY CENTER
INFORMATION
PLUMBING ROUGH–IN PLAN

CODE ID. NO. | SIZE A1
I/D NO.
STA. PROJ. NO.
SPEC. NO. 2921–99–0117
CONSTR. CONTR. NO. N62477–03–C–0151
NAVFAC DRAWING NO. 318176
MILCON # P–245
SHEET K–5 OF

REVDATE

A1 – 594 mm X 841 mm

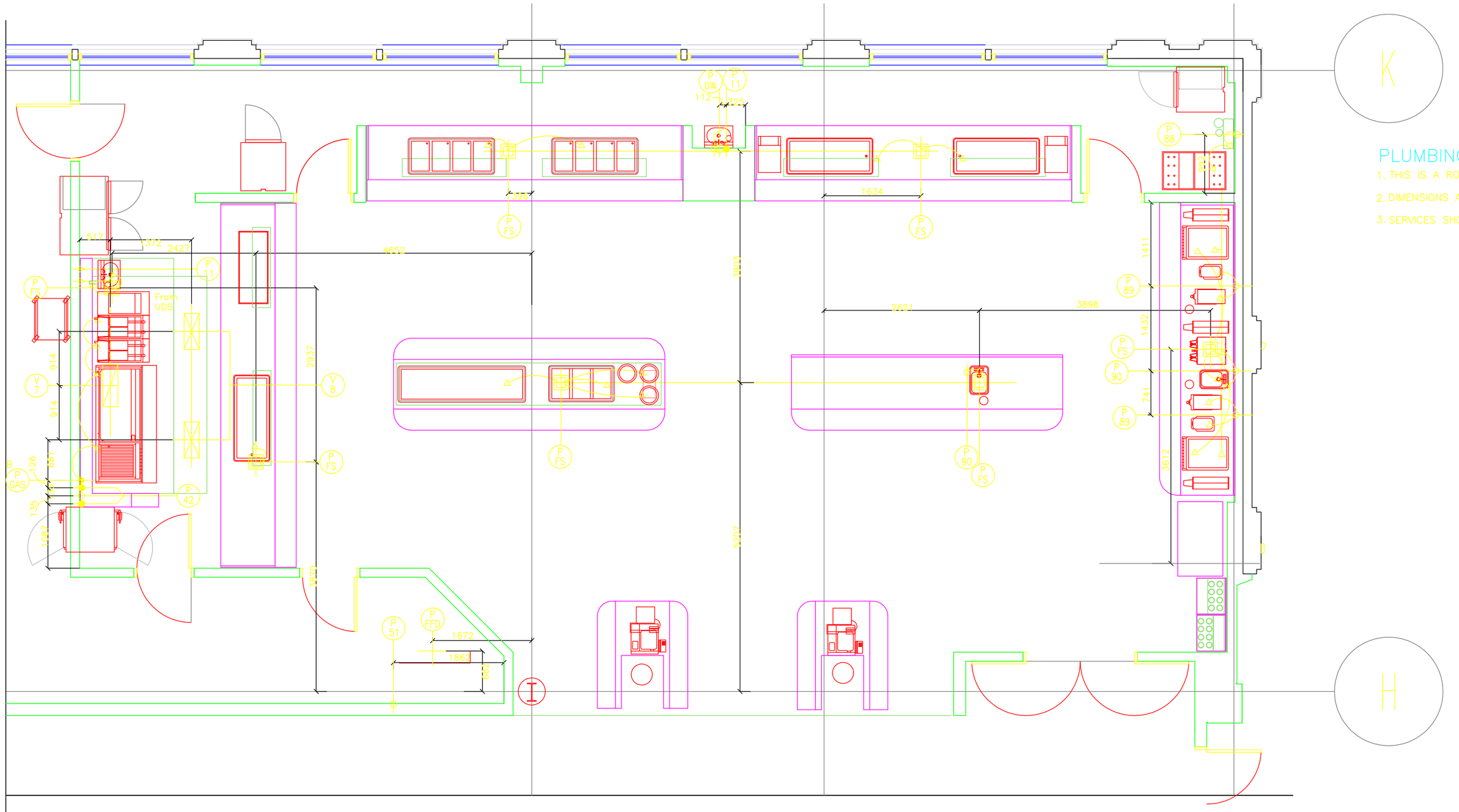

PLUMBING ROUGH-IN NOTES

1. THIS IS A ROUGH-IN DRAWING.
2. DIMENSIONS ARE GIVEN FROM FINISHED FACE OF WALLS, FLOOR, OR COLUMN CENTER LINES.
3. SERVICES SHOWN RELATE TO FOOD SERVICE REQUIREMENTS ONLY AND SHOW WHERE UTILITIES ARE TO BE .

PLUMBING SCHEDULE

CONN.	ITEM	NEW KITCHEN EQUIPMENT	DESCRIPTION		HW	HW (mm)	CW	CW (mm)	WASTE	WASTE (mm)	COMMENTS
P011	011		Hand Sinks –	NIC	1/2", +37"	12.5, +940	1/2", +37"	12.5, +940	DW, 1-1/2", +24-1/2"	DW, 40, +622	
P042	042		Utility Raceway –	NIC	1/2", +112"	12.5, +2845	1/2", +112"	12.5, +2845	IW, 2", to FS	IW, 50, to FS	For (1) handsink
P042	042		Utility Raceway –	NIC	3/4", +112"	20, +2845			IW, 2", to FS	IW, 50, to FS	For waterwash system
P051	051			NIC							
P054	054	YES	Refrigerated Cold Pan						IW, 1", to FS	IW, 25.5, to FS	
P061	061	YES	Hot Food Wells						IW, 3/4", to FS	IW, 20, to FS	
P065	065	YES	Refrigerated Cold Pan						IW, 3/4", to FS	IW, 20, to FS	
P075	075	YES	Coffee Brewer				1/2", POC	12.5, POC			
P081	081	YES	Refrigerated Cold Pan						IW, 1", to FS	IW, 25.5, to FS	
P083	083	YES	Hot Food Well						IW, 1", to FS	IW, 25.5, to FS	
P084	084	YES	Soup Wells						IW, 1", to FS	IW, 25.5, to FS	
P087	087		Ice/Soda Dispensers –	NIC					IW, 1", to FS	IW, 25.5, to FS	
P088	088		Bag-in-Box System –	NIC			1/2", +60"	12.5, +1525			Water from filter
P089	089		Iced Tea Brewer –	NIC			1/2", +12"	12.5, +305			
P090	090	YES	Countertop Sinks				1/2", +12"	12.5, +305	IW, 1-1/2" to FS	IW, 40 to FS	
P091	091		Juice Dispenser –	NIC			1/2", POC	12.5, POC			
P092	092		Coffee Brewer –	NIC			1/2", POC	12.5, POC	IW, 1", to FS	IW, 25.5, to FS	

GAS CONNECTION SCHEDULE

CONN.	ITEMS	NEW KITCHEN EQUIPMENT	DESCRIPTION	SIZE	SIZE (mm)	MBTUH	COMMENT	AFF
PGasB		NIC	Gas Drop	1-1/4"	32	395	Utility Raceway Item 42	DFA ceiling line
G045	045	YES	Fryer Assembly	3/4"	20	110 ea.	PGas B	POC
G046	046	YES	Char-Broiler	3/4"	20	60	PGas B	POC
G047	047	YES	Griddle	3/4"	20	96	PGas B	POC

ORIGINAL CONSTRUCTION NOTES

GENERAL CONTRACTOR SHALL ROUGH-IN MAIN KITCHEN GAS DROPS AND CAP OFF. FIRE SYSTEM INSTALLER SHALL PROVIDE AND INSTALL GAS SHUTOFF VALVE AND CONNECT TO FIRE SYSTEM.

GENERAL CONTRACTOR TO PROVIDE A QUICK-OPENING VALVE AT +6'-6" IN ALL KITCHEN GAS DROPS AND CAP-OFF.

GENERAL CONTRACTOR SHALL EXTEND AND MAKE-UP TO EQUIPMENT AFTER EQUIPMENT IS SET IN PLACE, FORMING GAS MANIFOLD LOOP TO EQUALIZE PRESSURE. K.E.C. SHALL PROVIDE ALL GAS PRESSURE REGULATORS REQUIRED BY EQUIPMENT.

PLUMBING/MECHANICAL SYMBOLS

P	PLUMBING REFERENCE SYMBOL
V	VENTILATION REFERENCE SYMBOL
IC	EQUIPMENT UTILITY INTERCONNECTION
CW	COLD WATER
HW	HOT WATER
DW	DIRECT OR TIGHT WASTE
PVC	6" OPEN PVC CONDUIT
EMT	6" OPEN EMT CONDUIT
AFD	4" AREA FLOOR DRAIN (CONVENIENCE) FLUSH TO FLOOR
FFD	4" FUNNEL FLOOR DRAIN, FLUSH TO FLOOR
FS	4" FLOOR SINK, FLUSH TO FLOOR
OSD	4" OPEN SITE DRAIN (HUB) WITH STRAINER
G	GAS ROUGH-IN DFA+
MBTUH	1000 BTU PER HOUR
DFA+	ROUGH-IN MADE TO DISTANCE AFF FROM ABOVE
PRV	PRESSURE RELIEF VALVE
POC	POINT OF CONNECTION, BRANCH FROM ADJACENT STUB
W/D	WASHER/DRYER SET, LAUNDRY BOX
FTD	FLOOR TRENCH DRAIN (3" DW) FLUSH TO FLOOR
HS	HAND SINK GROUP
	EXHAUST FLUE/RISER (NO FAN)
	VENTILATION SUPPLY DUCT
	VENTILATION EXHAUST DUCT
GAV	GENERAL AREA VENT, BY G.C.

SCALE: 1:50

TRICON FOODSERVICE CONSULTANTS, INC.
380 MAPLE AVENUE WEST, SUITE L-5
VIENNA, VA 22180 USA
703 242-7020 FAX 242-7268

GRAPHIC SCALE1:50 mm
0 500 1000 2500 5000

N

Security Consultant:
AMLICKE
ENGINEERING SERVICES INT'L
14500 Cartwright Way
Gaithersburg, MD 20878
Tel: 301.315.9677

Fire Protection Consultant:
ROLF JENSEN ASSOCIATES
3040 Williams Drive
Suite 400
Fairfax, VA 22301
Tel: 703.641.4600 Fax: 703.641.4608

Acoustics Consultant:
ACOUSTICAL
DESIGN COLLABORATIVE, LTD.
7509 L' Hirondelle Club Road
Ruxton, MD 21204
Tel: 410.821.5930 Fax: 410.821.5931

Food Service Consultant:
TRICON
FOODSERVICE CONSULTANTS, INC
380 Maple Avenue
Vienna, VA 22180
Tel: 703.242.7020 Fax: 703.242.7268

Civil Engineer:
CIVIL ENGINEER
A.MORTON THOMAS INC.
12750 Twinbrook Parkway
Rockville, MD 20852
Tel: 301.881.2545

Mechanical, Electrical, & Plumbing Engineers:
ALLEN & SHARIFF
7061 Deepage Drive
Columbia, MD 21045
Tel: 410.381.7100
Fax: 410.381.7110

Structural Engineer:
CAGLEY & associates
6141 Executive Blvd.
Rockville, MD 20852
Tel.: (301) 881-9050
Fax.: (301) 881-1125

Architect:
BBGM
BRENNAN BEER GORMAN MONK/ ARCHITECTS & INTERIORS, P.L.L.C.
1030 15th Street, NW, Ste. 900
Washington DC 20005
Tel: 202.452.1644 Fax: 202.452.1647

SYM.	DESCRIPTION	DATE	APPROVED
	FINAL SUBMISSION/ISSUE FOR CONSTRUCTION	07/29/04	
	100% BELOW GRADE SUBMISSION	02/25/04	
	100% DESIGN SUBMISSION	02/03/04	

REVISIONS

Design Builder

BARCLAY WHITE COMMANDER CONSTRUCTION

CKD	DATE	APPROVED BY (DOD)	DATE

CKD	DATE	APPROVED BY	DATE

DEPARTMENT OF THE NAVY
NAVAL FACILITIES ENGINEERING COMMAND
WASHINGTON, DC

ENGINEERING FIELD ACTIVITY CHESAPEAKE
NAVAL STATION

NSWC, CARDEROCK DIVISION
WEST BETHESDA, MD

MARITIME TECHNOLOGY CENTER
INFORMATION

PLUMBING ROUGH-IN PLAN

CODE ID. NO.	SIZE A1
EFD NO.	
STA. PROJ. NO.	
SPEC. NO.	2921-99-0117
CONSTR. CONTR. NO.	N62477-03-C-0151
NAVFAC DRAWING NO.	3318178
MILCON #	P-246
SHEET	OF
	K-6

REVDATE

A1 - 594 mm X 841 mm.

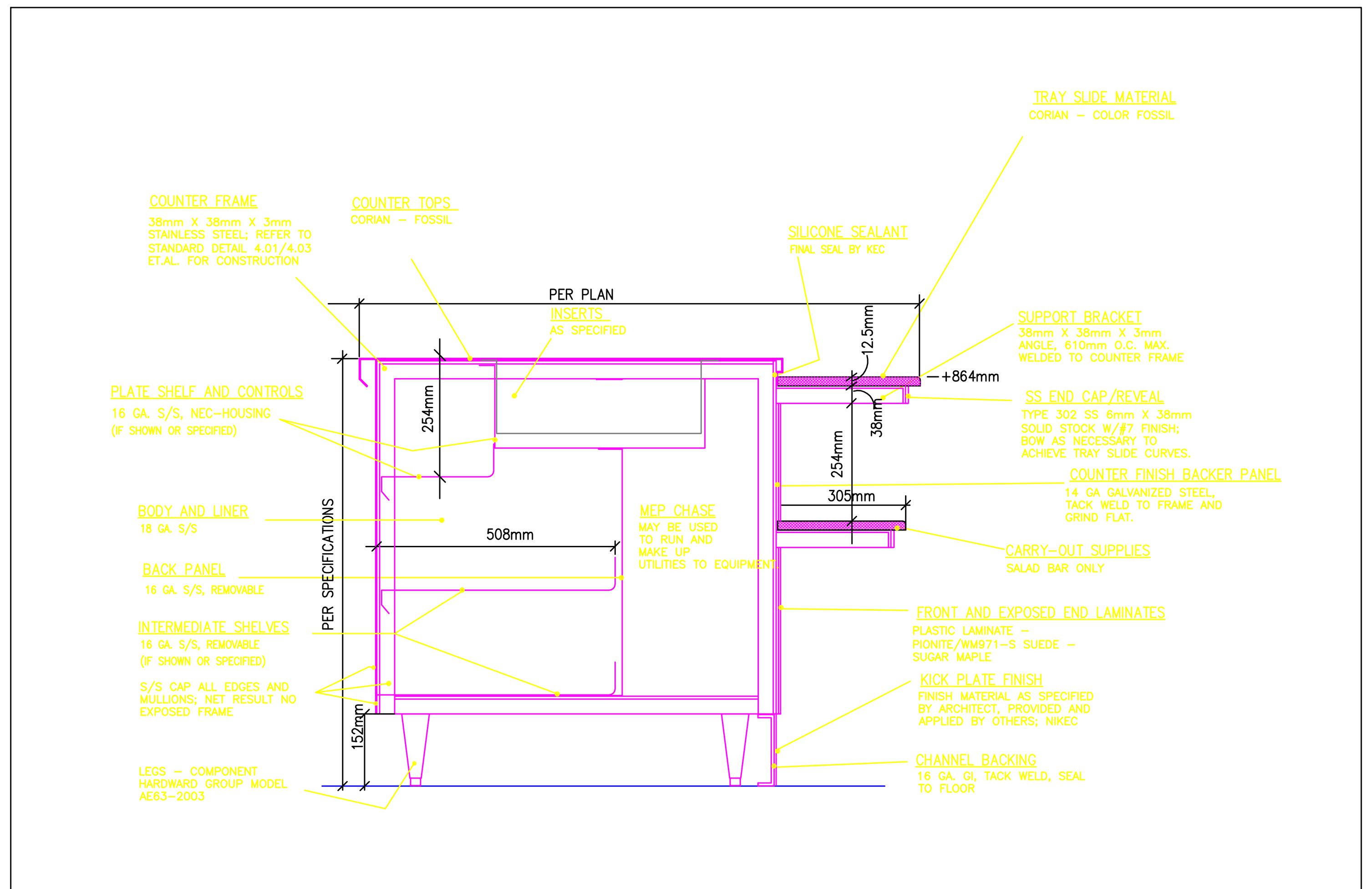

TYPICAL COUNTER SECTION

SCALE: 1 : 12.5   DOES NOT LOCATE CONTROLS

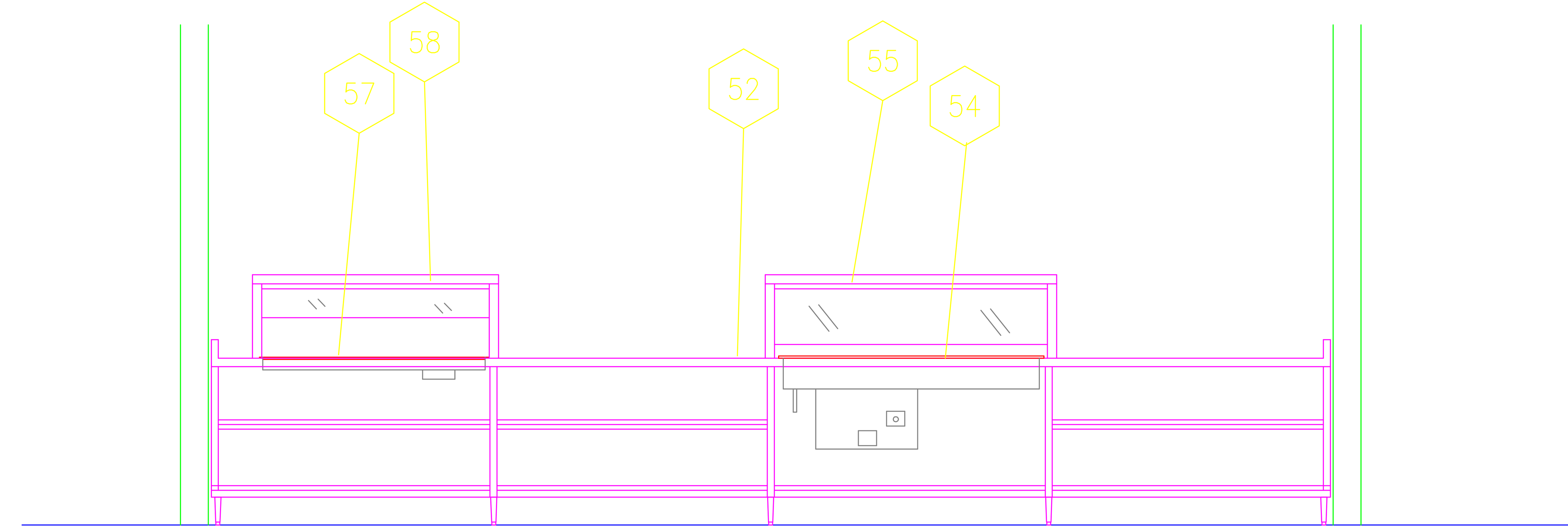

A GRILL COUNTER

Scale : 1:25

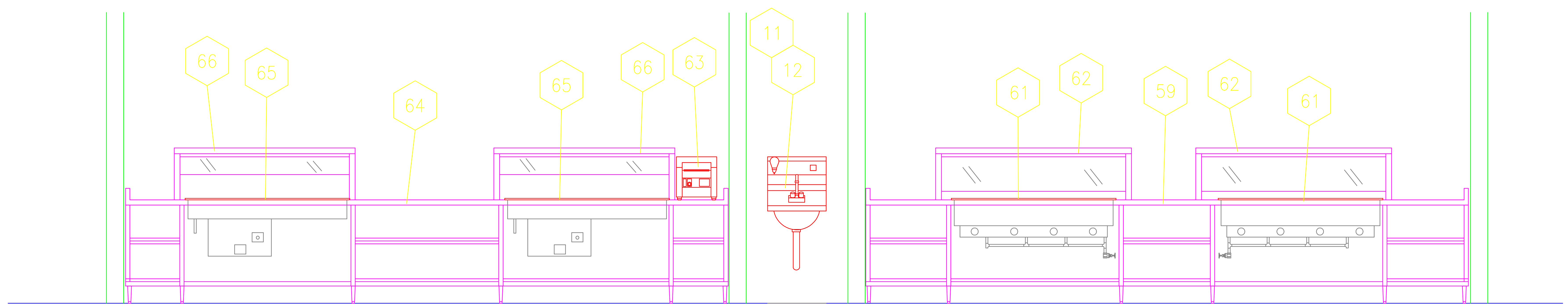

DELI COUNTER

HOT ENTREE COUNTER

B DELI/HOT ENTREE COUNTERS

Scale : 1:25

GRAPHIC SCALE1:25 mm

0 250 500 1250 2500

Security Consultant:
AMLICKE
ENGINEERING SERVICES INT'L
14500 Cartwright Way
Gaithersburg, MD 20878
Tel: 301.315.9677

Fire Protection Consultant:
ROLF JENSEN ASSOCIATES
3040 Williams Drive
Suite 400
Fairfax, VA 22301
Tel: 703.641.4600 Fax: 703.641.4608

Acoustics Consultant:
ACOUSTICAL
DESIGN COLLABORATIVE, LTD.
7509 L' Hirondelle Club Road
Ruxton, MD 21204
Tel: 410.821.5930 Fax: 410.821.5931

Food Service Consultant:
TRICON
FOODSERVICE CONSULTANTS, INC
380 Maple Avenue
Vienna, VA 22180
Tel: 703.242.7020 Fax: 703.242.7268

Civil Engineer:
CIVIL ENGINEER
A.MORTON THOMAS INC.
12750 Twinbrook Parkway
Rockville, MD 20852
Tel: 301.881.2545

Mechanical, Electrical, & Plumbing Engineers:
ALLEN & SHARIFF
7061 Deepage Drive
Columbia, MD 21045
Tel: 410.381.7100
Fax: 410.381.7110

Structural Engineer:
CAGLEY & associates
6141 Executive Blvd.
Rockville, MD 20852
Tel.: (301) 881-9050
Fax: (301) 881-1125

Architect:
BBGM
BRENNAN BEER GORMAN MONK/ARCHITECTS & INTERIORS, P.L.L.C.
1030 15th Street, NW. Ste. 900

TRICON FOODSERVICE CONSULTANTS, INC.
380 MAPLE AVENUE WEST, SUITE L-5
VIENNA, VA 22180 USA
703 242-7020 FAX 242-7268

ENGINEERING FIELD ACTIVITY CHESAPEAKE

NSWC, CARDEROCK DIVISION WEST BETHESDA, MD

MARITIME TECHNOLOGY INFORMATION CENTER

SERVERY ELEVATIONS

BARCLAY WHITE COAKLEY CONSTRUCTION

FINAL SUBMISSION/ISSUE FOR CONSTRUCTION	07/26/04	
TCON BELOW GRADE SUBMISSION	05/24/04	
100% DESIGN SUBMISSION	02/03/04	
DESCRIPTION	DATE	APPROVED

REVISIONS

K-7

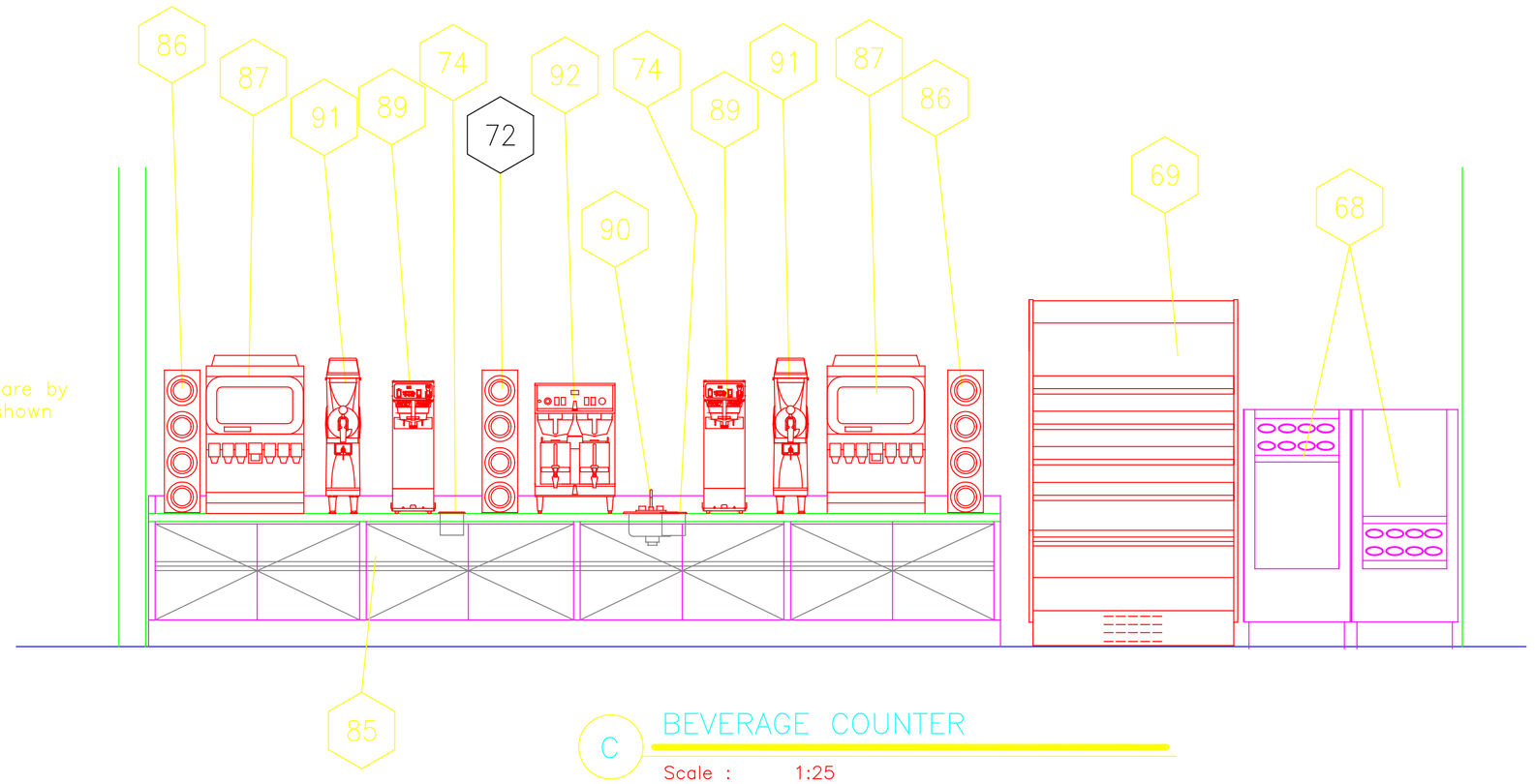

Items 87, 88, 89, & 91 are by snack vendors, and are shown as reference only; NIC

C BEVERAGE COUNTER

Scale : 1:25

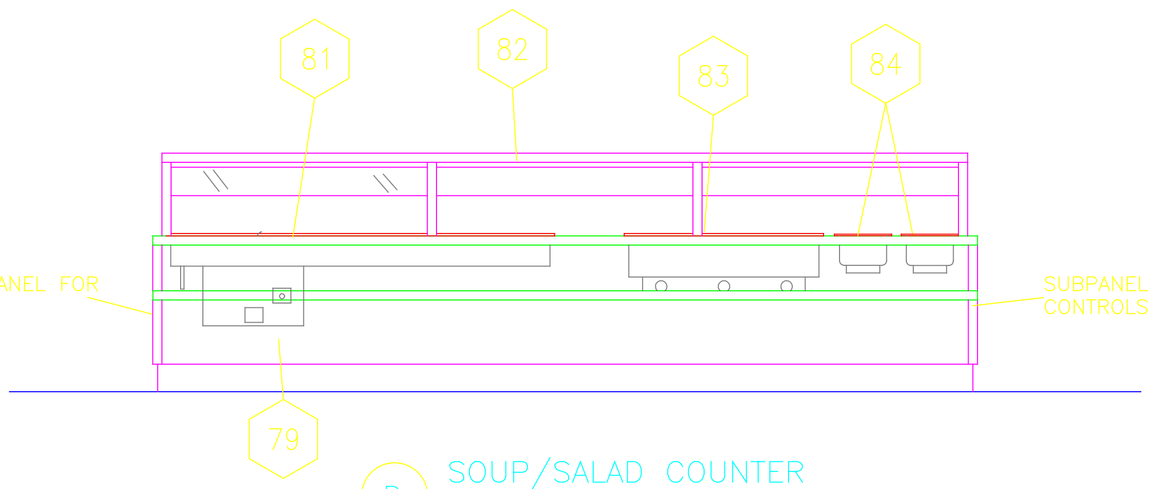

LOUVERED END PANEL FOR AIR CIRCULATION

SUBPANEL B AND EQUIPMENT CONTROLS THIS END

D SOUP/SALAD COUNTER

Scale : 1:25

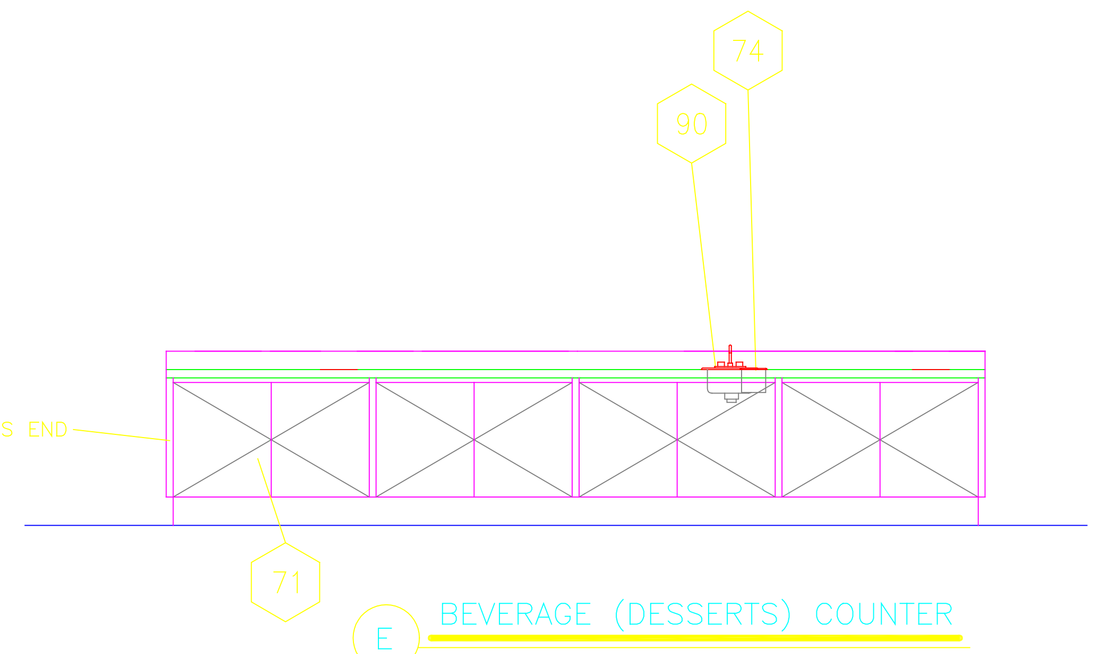

SUBPANEL A THIS END

E BEVERAGE (DESSERTS) COUNTER

Scale : 1:25

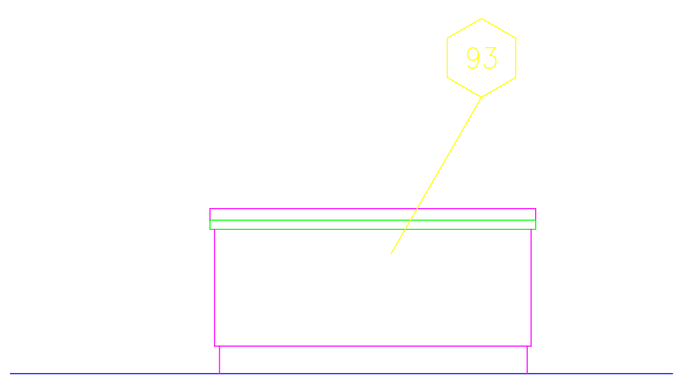

F CASHIER COUNTER

Scale : 1:25

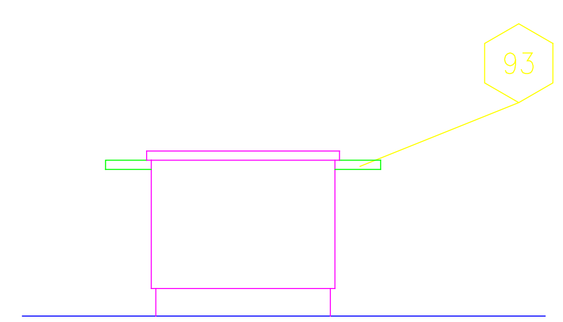

G CASHIER COUNTER (END)

Scale : 1:25

GRAPHIC SCALE1:25 mm

0 250 500 1250 2500

TRICON FOODSERVICE CONSULTANTS, INC.
380 MAPLE AVENUE WEST, SUITE L-5
VIENNA, VA 22180 USA
703 242-7020 FAX 242-7268

Security Consultant:
AMLICKE
ENGINEERING SERVICES INT'L
14500 Cartwright Way
Gaithersburg, MD 20878
Tel: 301.315.9677

Fire Protection Consultant:
ROLF JENSEN ASSOCIATES
3040 Williams Drive
Suite 400
Fairfax, VA 22301
Tel: 703.641.4600 Fax: 703.641.4608

Acoustics Consultant:
ACOUSTICAL
DESIGN COLLABORATIVE, LTD.
7509 L' Hirondelle Club Road
Ruxton, MD 21204
Tel: 410.821.5930 Fax: 410.821.5931

Food Service Consultant:
TRICON
FOODSERVICE CONSULTANTS, INC
380 Maple Avenue
Vienna, VA 22180
Tel: 703.242.7020 Fax: 703.242.7268

Civil Engineer:
CIVIL ENGINEER
A.MORTON THOMAS INC.
12750 Twinbrook Parkway
Rockville, MD 20852
Tel: 301.881.2545

Mechanical, Electrical, & Plumbing Engineers:
ALLEN & SHARIFF
7061 Deepage Drive
Columbia, MD 21045
Tel: 410.381.7100
Fax: 410.381.7110

Structural Engineer:
CAGLEY & associates
6141 Executive Blvd.
Rockville, MD 20852
Tel.: (301) 881-9050
Fax.: (301) 881-1125

Architect:
BBGM
BRENNAN BEER GORMAN MONK/ ARCHITECTS & INTERIORS, P.L.L.C.
1030 15th Street, N.W. Ste. 900
Tel: 202.452.1646 Fax: 202.452.1647

SYM.	DESCRIPTION	DATE	APPROVED
	FINAL SUBMISSION/ISSUE FOR CONSTRUCTION	07/29/04	
	100% BELOW GRADE SUBMISSION	02/24/04	
	100% DESIGN SUBMISSION	02/03/04	

REVISIONS

Design Builder

BARCLAY WHITE COMMANDER CONSTRUCTION

SYM.	DESCRIPTION	DATE
A1		
A2		
A3		
A4		
A5		

REVISED SF 1600

CAD DRAWING BY: LR FILE: CAD DATE: DATE: DATE:

FUNCTIONAL APPROVAL: APPROVED: DATE:

TITLE FOR COORDINATE SHEET:

SEAL

DEPARTMENT OF THE NAVY — NAVAL FACILITIES ENGINEERING COMMAND
ENGINEERING FIELD ACTIVITY CHESAPEAKE
NAVAL STATION WASHINGTON, DC

NSWC, CARDEROCK DIVISION
WEST BETHESDA, MD
MARITIME TECHNOLOGY INFORMATION CENTER
SERVERY ELEVATIONS

CODE ID. NO.	SIZE A1
EFD NO.	
STA. PROJ. NO.	
SPEC. NO.	2921-99-0117
CONSTR. CONTR. NO.	N62477-03-C-0161
NAVFAC DRAWING NO.	3516180
MILCON #	P-246
SHEET	OF
K-8	

REVDATE

A1 = 594 mm X 841 mm