STATEMENT OF WORK

1.0 Introduction

1.1 This specification establishes the requirements for the design, manufacture, and delivery of one DC Load Bank Platform to the Naval Surface Warfare Center, Carderock Division, Ship Systems Engineering Station (NSWCCD-SSES), Philadelphia, PA.

1.2 The Contractor shall fabricate and assemble structural assemblies in their shop to the greatest extent possible, and ship to NSWCCD-SSES.

1.3 The DC Load Banks Platform is to be delivered to NSWCCD-SSES no later than 6 weeks after receipt of Release for Manufacture per paragraph 6.

2.0 Scope

2.1 The Contractor shall furnish all labor, material, and equipment necessary to perform all work in accordance with the drawings, and specifications provided in this document.

2.2 Shop drawings and weight lists shall be prepared in accordance with the AISC specifications and then submitted to NSWCCD-SSES for approval within 10 days after award of contract. Approval of shop drawings shall not relieve the fabricator responsibility of structural adequacy and fit up.

2.3 The Contractor shall establish and maintain a system for the control of quality and workmanship during the manufacture and examination, which will insure that all components and assemblies furnished under this specification, meet requirements hereinafter specified.

2.4 The Contractor shall be responsible for the design, procurement of materials, fabrication, cleaning, surface preparation, painting, packaging and shipping (complete and ready for erection) of all items in this specification. The Contractor shall assume the responsibility of his product in transit.

2.5 All design, material, fabrication shall conform to the 9th Edition of the "Specification for Steel for Building" (Allowable Stress Design) and "Code of Standard Practice" as complied by the American Institute of Steel Construction (AISC).

2.6 Structural Steel shall be in accordance with ASTM A992, Grade 50 (U.N.O.).

2.7 Connections shall be designed in accordance with 9th Edition of the "AISC" Specification for the Design, Fabrication, and Erection of Structural Steel for Buildings" and Part 4 of the AISC Manual of Steel Construction for the Loads given on drawings. If no loads are given, the minimum bean connection shall be designed to support one-half of the total uniform load capacity shown in the tables of uniform load constants, Part 2 of the Manual of Steel Construction for the given beam , span, and grade of steel specified. All beams to column connections are to be moment connections. Bending moment values are shown on sheet 3 of drawing 7625154 DC Load Banks Platform Arrangement and Details. All field connections shall be bolted. Shop connections shall be either welded or bolted.

2.8 Design, detailing, and fabrication of all welded connections shall be in accordance with the AWS Structural Welding Code D1.1. AISC Manual of Steel Construction Vol. II Connections, and AISC Detailing for Steel Construction. Welds shall be E70XX electrodes. Fillet welds shall be a minimum of 3/16".

2.9 Inspections shall be performed as hereinafter specified all welds in accordance with AWS Structural Welding Code D.1.1.

2.10 Platform shall be shop welded with field bolted connections; specifically, no welding shall be performed at NSWCCD-SSES Philadelphia.

2.11 All steel shall be cleaned and then painted with an anti-corrosive primer upon completion all welding and weld inspection. Finish all steel with two coats of light gray (ANSI 61).

2.12 DC Load Banks Platform shall be shipped in a manner that will ensure acceptance and safe delivery at destination. Supplier is responsible for damage during shipment.

2.13 Each piece shall be marked with the contract number, contract item number, drawing number, assembly number, and purchase specification number.

3.0 Equipment and Services provided by the Government

3.1 Unload at NSWCCD-SSES, and erect in accordance with the Shop Drawings.

4.0 Applicable Documents

4.1 The following specifications, standards and codes, latest editions, form part of this specification. The design of the DC Load Banks Platform identified in this specification shall be in compliance with all applicable sections herein.

4.2 Referenced Specifications, Standards, and Codes:

4.2.1 American Institute of Steel Construction (AISC) 9th Edition

4.2.2 American Welding Society (AWS) D1.1 Structural Welding Code - Steel

4.2.3 American National Standards Institute (ANSI) 61 for Paint

4.2.4 American Society for Testing and Materials (ASTM) A325 Specification for Structural Grade Bolts

4.2.5 ASTM A36 Specifications for Carbon Structural Steel

4.2.6 ASTM A53 Specifications for Structural Grade Pipe

4.2.5 ASTM A992 Specifications for Steel Structural Shapes

4.2.6 Drawing DC Load Banks Platform Arrangement And Details (7625154 Rev -).

4.2.7 International Building Code, 2003

4.2.8 American Society of Civil Engineers (ASCE) 7-02

4.2.9 "D.O.T. Regulation-49"

4.2.10 Steel Structures Painting Council (SSPC)

5.0 Technical Data

5.1 Final shop drawings are to be submitted and approved by the Government prior to proceeding with any fabrication work. These shop drawings are to include materials, dimensions, finishes and detailed installation plans allowing mechanical assembly without field welding. The Government will provide review and comment of final drawings 3 days after receipt of the drawing package.

6.0 Release for Manufacture

6.1 The Government will provide a release for manufacture to the Contractor following approval of the final drawings by the Government. See paragraph 5.1 above.

7.0 Inspection and Testing

7.1 The Contractor shall notify the Government two weeks prior to the shipping date. The Government reserves the right to conduct an in-plant inspection of the pieces prior to packaging for shipment.

8.0 Shipping

8.1 Packaging

8.1.1 Equipment shall be packed for shipping in a manner that will ensure acceptance and safe delivery at destination. Supplier is responsible for damage during shipment.

8.1.2 Each package shall be marked with the Contract Number, Contract Item Number and the Purchase Specification Number DC-LB-01

8.1.3 Shipping Address: Naval Surface Warfare Center
Carderock Division
Ship Systems Engineering Station
901 Admiral Peary Way
Naval Business Center
Philadelphia, Pa 19112
Attn: Howard Feinstein, Code 9112
Phone: (215) 897-8895
Cell: (215) 837-1787

9.0 Contractor Data Requirements

9.1 Contractor shall provide welding procedure and joint design in accordance with the AWS Structural Welding Code-Steel AWS D1.1 five (5) days after award of contract.

9.2 Contractor shall provide certifications that the welders employed in this effort are AWS qualified five (5) days after award of contract.

10. List Of Deliverables

Item	Qty	Description	Due after Date of Contract
0001	I Lot	Welding procedures and joint design	5 Days After
0002	1 Lot	Welder Certifications	5 Days After

0003	1 Lot	Shop drawings and weight lists.	10 Days After
0004	1 Lot	Final Shop drawings	6 Weeks After
0005	1	Load Bank Platform	6 Weeks After

11.0 GOVERNMENT FURINSHED INFORMATION (GFI)

11.1 NSWCCD-SSES Drawing 7625154 Rev -, DC Load Banks Platform

11.2 NSWCCD-SSES Specification DCLB-01

12.0 GOVERNMENT FURINSHED MATERIAL (GFM)

12.1 None

STEEL NOTES

1. DEVIATIONS FROM THIS DRAWING ARE NOT PERMITTED WITHOUT APPROVAL FROM THE NSWCCD-SSES PROGRAM OFFICE (CODE 9112).
2. ALL DESIGN, MATERIAL, FABRICATION, AND ERECTION SHALL CONFORM TO THE 9TH EDITION OF THE "SPECIFICATION FOR THE DESIGN, FABRICATION, AND ERECTION OF STRUCTURAL STEEL FOR BUILDINGS" (ALLOWABLE STRESS DESIGN) AND "CODE OF STANDARD PRACTICE" AS COMPILED BY THE AMERICAN INSTITUTE OF STEEL CONSTRUCTION (AISC).
3. ALL STRUCTURAL STEEL SHALL BE ASTM A992, GRADE 50 (U.N.O.).
4. CONNECTIONS SHALL BE DESIGNED IN ACCORDANCE WITH THE 9TH EDITION OF THE AISC "SPECIFICATION FOR THE DESIGN, FABRICATION, AND ERECTION OF STRUCTURAL STEEL FOR BUILDINGS" AND PART 4 OF THE AISC MANUAL OF STEEL CONSTRUCTION FOR THE LOADS GIVEN ON THE DRAWINGS. IF NO LOADS ARE GIVEN, THE MINIMUM BEAM CONNECTION SHALL BE DESIGNED TO SUPPORT ONE-HALF OF THE TOTAL UNIFORM LOAD CAPACITY SHOWN IN THE TABLES OF UNIFORM LOAD CONSTANTS, PART 2 OF THE MANUAL OF STEEL CONSTRUCTION FOR THE GIVEN BEAM, SPAN, AND GRADE OF STEEL SPECIFIED. ALL BEAM TO COLUMN CONNECTIONS ARE TO BE MOMENT CONNECTIONS. BENDING MOMENT VALUES ARE SHOWN ON SHEET No. 3. ALL FIELD CONNECTIONS SHALL BE BOLTED. SHOP CONNECTIONS SHALL BE EITHER BOLTED OR WELDED.
5. STRUCTURAL STEEL BOLTED CONNECTIONS SHALL BE MADE WITH A MINIMUM 3/4" DIAMETER A325 HIGH STRENGTH BOLTS WITH STANDARD HOLES.
6. CONNECTIONS SHALL HAVE 2 BOLTS MINIMUM.
7. DESIGN, DETAILING, & FABRICATION OF ALL WELDED CONNECTIONS SHALL CONFORM TO THE AWS STRUCTURAL WELDING CODE D1.1; AISC MANUAL OF STEEL CONSTRUCTION, ASD, 9th ED.; AISC MANUAL OF STEEL CONSTRUCTION VOL. II CONNECTIONS, & AISC DETAILING FOR STEEL CONSTRUCTION. WELDS SHALL BE E70XX ELECTRODES. FILLET WELDS SHALL BE A MINIMUM 3/16".
8. SHOP DRAWINGS AND WEIGHT LISTS SHALL BE PREPARED BY THE FABRICATOR IN ACCORDANCE WITH AISC SPECIFICATIONS. SHOP DRAWINGS SHALL BE APPROVED BY THE NSWCCD-SSES ENGINEER (CODE 9112) BEFORE FABRICATION IS STARTED. APPROVAL SHALL NOT RELIEVE THE FABRICATOR OF HIS RESPONSIBILITY FOR STRUCTURAL ADEQUACY AND FIT-UP.
9. GALVANIZED GRATING SHALL BE 1 1/4" x 3/16" AND SHALL MEET THE REQUIREMENTS OF ASTM A569. WHERE OPENINGS OR CUT OUTS OCCUR IN THE GRATING, THE EDGES SHALL BE BANDED WITH 4" x 3/16" STEEL TOE PLATES. GRATING SHALL BE ATTACHED TO STRUCTURAL STEEL PER PLAN VIEW 4A.
10. ELEVATIONS GIVEN ARE REFERENCED TO TOP OF CONCRETE, GROUND FLOOR ELEVATION 0'-0".
11. ALL STEEL SHALL BE CLEANED AND THEN PAINTED WITH AN ANTI-CORROSIVE PRIMER UPON COMPLETION OF ALL WELDING AND WELD INSPECTION. FIELD WELDS ON STRUCTURAL MEMBERS SHALL BE CLEANED, WASHED WITH WATER AND COATED WITH AN ANTI-CORROSIVE PRIMER. FINISH ALL STEEL WITH TWO COATS OF LIGHT GRAY (ANSI 61) PAINT.
12. GROUT FOR LEVELING BASE PLATES SHALL BE NON-SHRINK GROUT, CHOCKFAST, OR EQUIVALENT WITH A MINIMUM STRENGTH OF 4000 PSI.
13. DESIGN CRITERIA

BUILDING CODE:	ICC 2003 INTERNATIONAL BUILDING CODE
SEISMIC DESIGN:	SEISMIC DESIGN BASED ON ASCE 7-02
DEAD LOAD:	EQUIPMENT – DC LOAD BANKS CUBICLES = 1.5K EACH
LIVE LOAD:	125 PSF

CONCRETE NOTES

1. CONCRETE HAS BEEN DESIGNED USING ULTIMATE STRENGTH DESIGN PER ACI CODE 318-2002.
2. ELEVATIONS SHOWN ARE REFERRED TO TOP OF CONCRETE, GROUND FLOOR ELEVATION 0'-0".
3. UNLESS OTHERWISE NOTED ON DRAWINGS, CONCRETE SHALL BE NORMAL WEIGHT AND HAVE A MINIMUM 28 DAY STRENGTH OF 4000 PSI. FINAL ACCEPTANCE OF CONCRETE WILL BE BASED UPON THE COMPRESSIVE STRENGTH TEST REPORTS WHICH SHALL BE SUBMITTED TO THE ENGINEER FOR APPROVAL.
4. CONCRETE WORK SHALL CONFORM TO THE LATEST EDITION OF ACI 301, "SPECIFICATIONS FOR STRUCTURAL CONCRETE FOR BUILDINGS" AND ACI 318, "BUILDING CODE REQUIREMENTS FOR REINFORCED CONCRETE" AND TO THE PROJECT SPECIFICATIONS.
5. ALL GROUT SHALL BE NON-SHRINK.
6. CONCRETE SHALL BE CAST ON UNDISTURBED SOIL. WHERE SOIL HAS BEEN DISTURBED BELOW THE ELEVATION SPECIFIED ON DRAWINGS, BACKFILL WITH LEAN CONCRETE OF SUCH STRENGTH THAT IT IS EQUAL TO AT LEAST THE ALLOWABLE SOIL VALUE. ALLOWABLE SOIL BEARING IS 1000 PSF.
7. AT THE TIME CONCRETE IS PLACED, THE EXCAVATION SHALL BE FREE FROM ACCUMULATED WATER. LOOSE MATERIAL SHALL BE REMOVED FROM THE BOTTOM OF THE EXCAVATION BEFORE PLACING CONCRETE.
8. ALL EXPOSED EDGES OF CONCRETE SHALL HAVE A 3/4" CHAMFER.
9. REINFORCING STEEL SHALL CONFORM TO ASTM A615, GRADE 60. WELDED WIRE FABRIC SHALL CONFORM TO ASTM A185.

CONCRETE NOTES (CONTD)

10. CONCRETE PROTECTION FOR REINFORCING STEEL FOR CAST-IN-PLACE CONSTRUCTION SHALL BE AS FOLLOWS:

CONCRETE CAST AGAINST EARTH	3"
CONCRETE EXPOSED TO EARTH OR WEATHER	2"
PRIMARY REINFORCEMENT	1 1/2"

11. PREFORMED EXPANSION JOINT MATERIAL SHALL CONFORM TO ASTM D1751.
12. THE LOAD BANK PLATFORM STRUCTURE SHALL BE CONNECTED TO THE CONCRETE PAD GROUND RING AS PER DETAILS SHOWN IN REFERENCE No. 2.
13. ANCHOR BOLTS SHALL CONFORM TO ASTM A36, WITH HEAVY HEX HEAD NUTS (ASTM A563), LEVELING NUTS, AND WASHERS (ASTM F436).
14. TO AVOID CONTACT WITH UNKNOWN SUBSURFACE UTILITIES OR CONCEALED CONDITIONS, CONTRACTOR SHALL OBTAIN AN EXCAVATION PERMIT FROM THE NSWCCD-SSES REPRESENTATIVE PRIOR TO ANY EXCAVATION. UPON DISCOVERY OF ANY HIDDEN UTILITIES, CONTRACTOR SHALL HALT WORK AND NOTIFY THE NSWCCD-SSES ENGINEER (CODE 9112).
15. ALL BOLTED LOAD BANK PLATFORM STRUCTURAL MEMBERS SHALL HAVE THE EQUIVALENT OF 1 SQUARE INCH OF STEEL WELD METAL APPLIED ACROSS JOINTS TO ASSURE ELECTRICAL GROUNDING CONTINUITY.

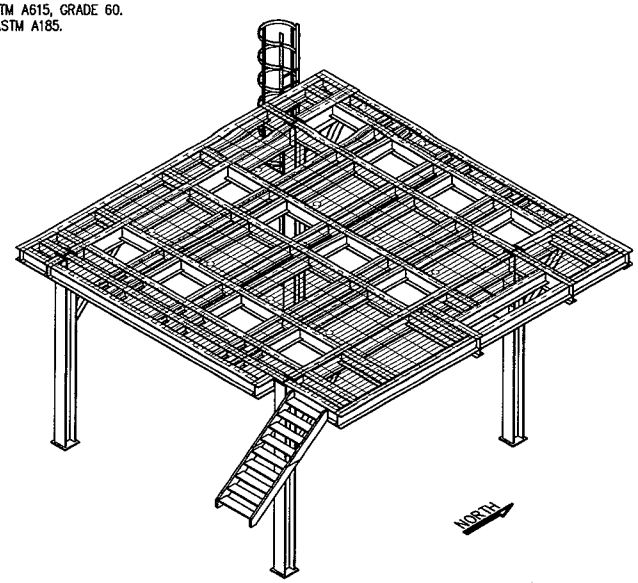

ISOMETRIC VIEW
DD(X) INTEGRATED POWER SYSTEM LAND BASED TEST SITE
BUILDING 77H, PHILADELPHIA
SCALE: NONE

REVISIONS

No.	TITLE	DRAWING No.
2	DD(X) IPS LBTS 13.8KV OUTDOOR POWER ARRANGEMENT & DETAILS	7625166
1	DD(X) IPS LBTS MACHINERY ARRANGEMENT	7625122

REFERENCES

CONTRACT No.	OFFICIAL	SIGNATURE	DATE
N65540-00-D-0064	DRAWN BY	R.S. Fox	4/15/04
NORTHROP GRUMMAN Mission Systems	CHECKED BY	C. Constantine	4/21/04
	PROJ. MGR	M. Lamberto	4/21/04

6981 NORTH PARK DRIVE
SUITE 400 WEST
PENNSAUKEN, NJ 08109-4205

APPROVED NSWCCD-SSES	DATE
TECH REVIEW	8/11/04
PROG MGR	8/12/04

DD(X) INTEGRATED POWER SYSTEM (IPS) LAND BASED TEST SITE (LBTS)
NSWCCD-SSES, BUILDING 77H, PHILADELPHIA, PA.

DC LOAD BANKS PLATFORM ARRANGEMENT AND DETAILS

SIZE	CODE IDENT	DRAWING No.	REV
B	89256	7625154	–

SCALE: NONE | SHEET 1 of 6

\BUILDING 77H\DD(X) IPS DRAWINGS\7625154 R- D04-08-12.DWG

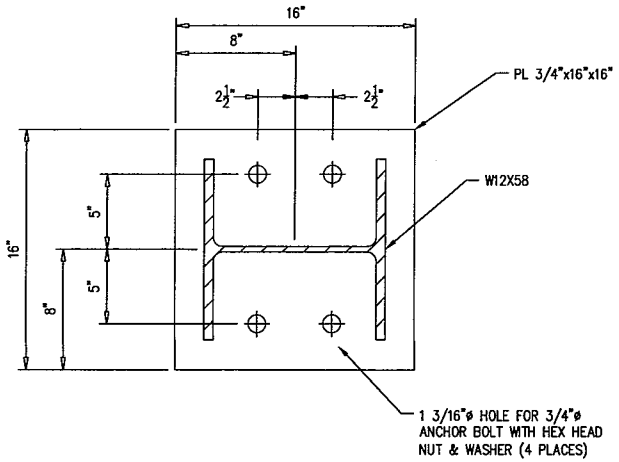

DETAIL 2B
DCLB PLATFORM BASEPLATE
(TYP 4 PLACES)
SCALE: 1 1/2"=1'-0"

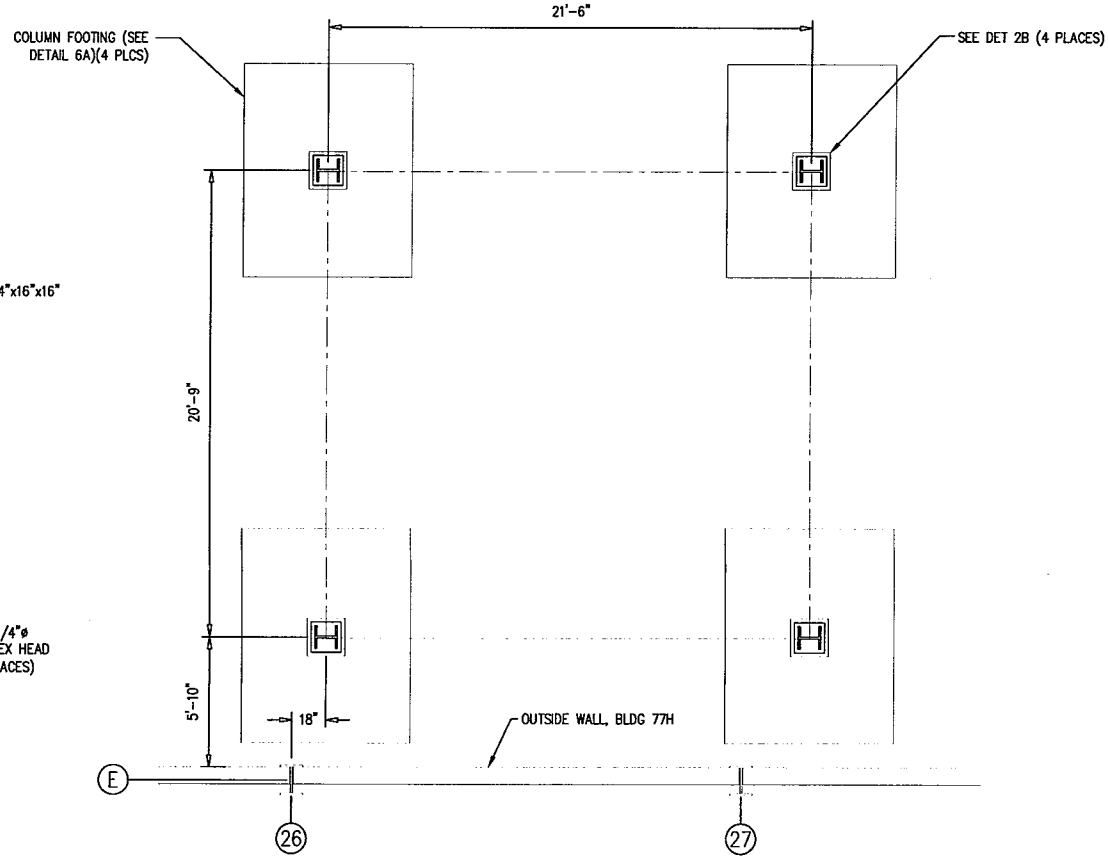

PLAN VIEW 2A
COLUMN LOCATION
0'-0" LEVEL
SCALE: 3/16"=1'-0"

NORTH

DD(X) IPS LBTS, BLDG 77H
DCLB PLATF
COLUMN & BASEPLATES ARRANGEMENT

SIZE	CODE IDENT	DRAWING No.	REV
B	89256	7625154	–
SCALE: AS NOTED		SHEET 2	

~\BUILDING 77H\DD(X) IPS DRAWINGS\7625154 R– D04-08-12.DWG

NOTE:
W8 = W8x18 BEAM
W12 = W12x40 BEAM

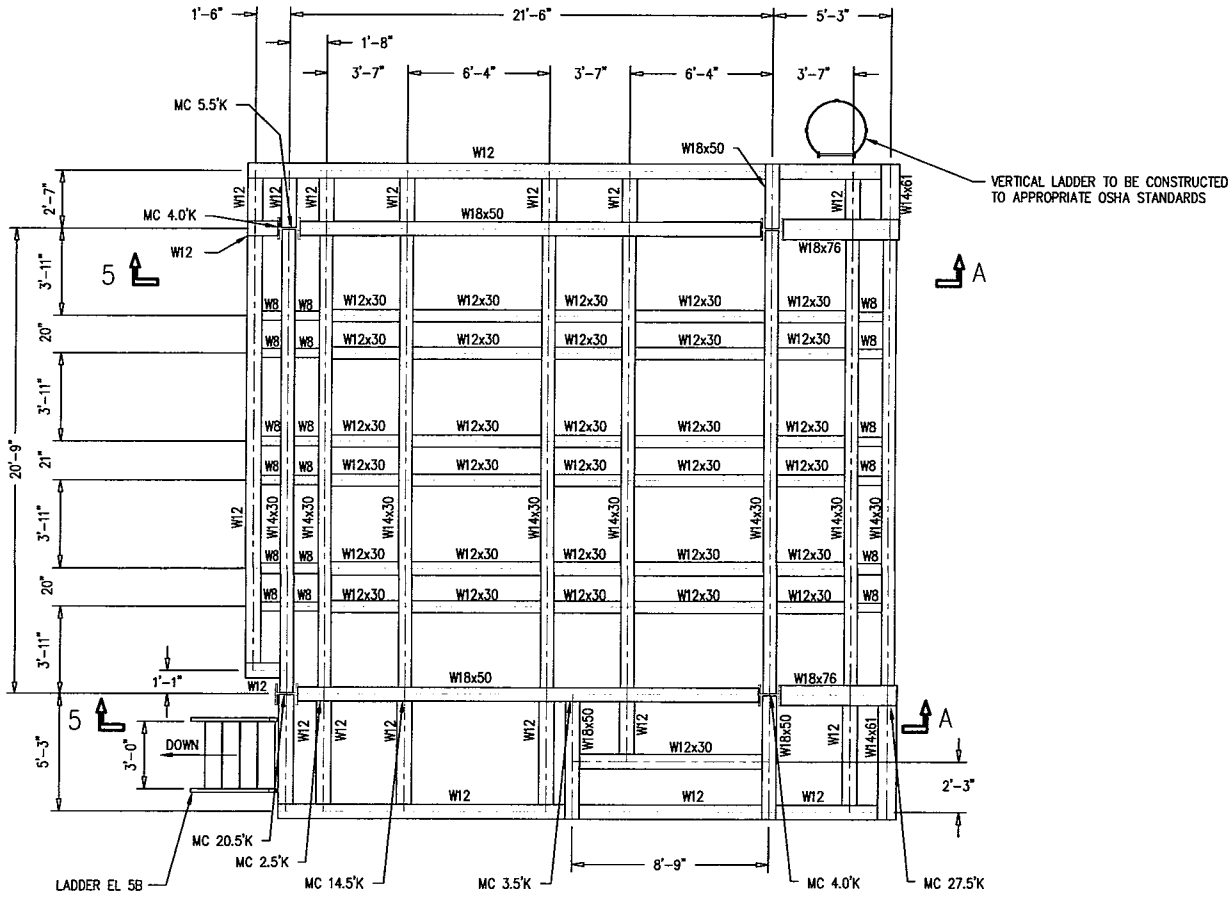

PLAN VIEW 3A

DCLB PLATFORM
16'-6" EL
SCALE: 3/16"=1'-0"

NORTH

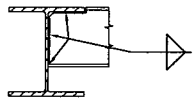

DETAIL 3C

TYP BEAM CONNECTION
SCALE: NONE

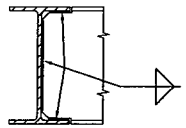

DETAIL 3B

TYP BEAM CONNECTION
SCALE: NONE

DD(X) IPS LBTS, BLDG 77H

DCLB PLATF
FRAME ARRANGEMENT

SIZE	CODE IDENT	DRAWING No.	REV
B	89256	7625154	–
SCALE: AS NOTED		SHEET 3	

~\BUILDING 77H\DD(X) IPS DRAWINGS\7625154 R- D04-08-12.DWG

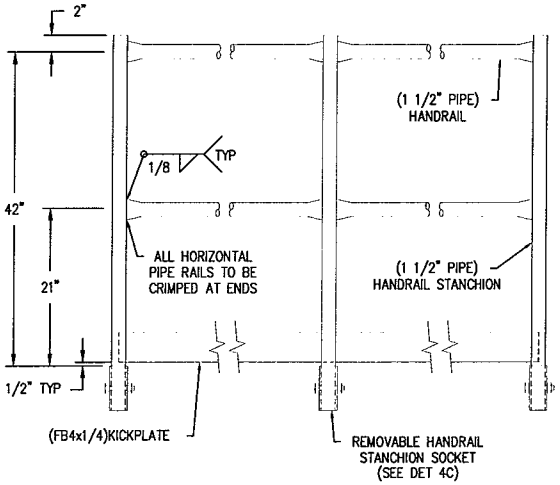

DETAIL 4B

TYPICAL REMOVABLE HANDRAIL CONSTRUCTION
SCALE: 3/4"=1'-0"

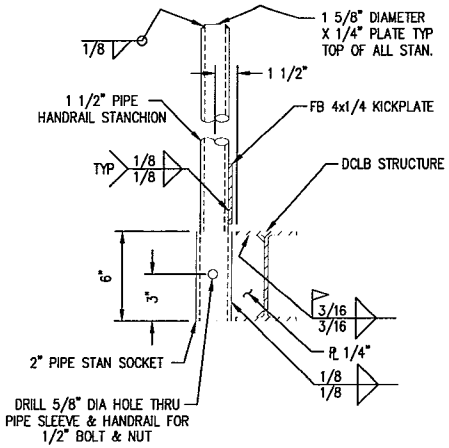

DETAIL 4C

REMOVABLE HANDRAIL STANCHION SOCKET
SCALE: NONE

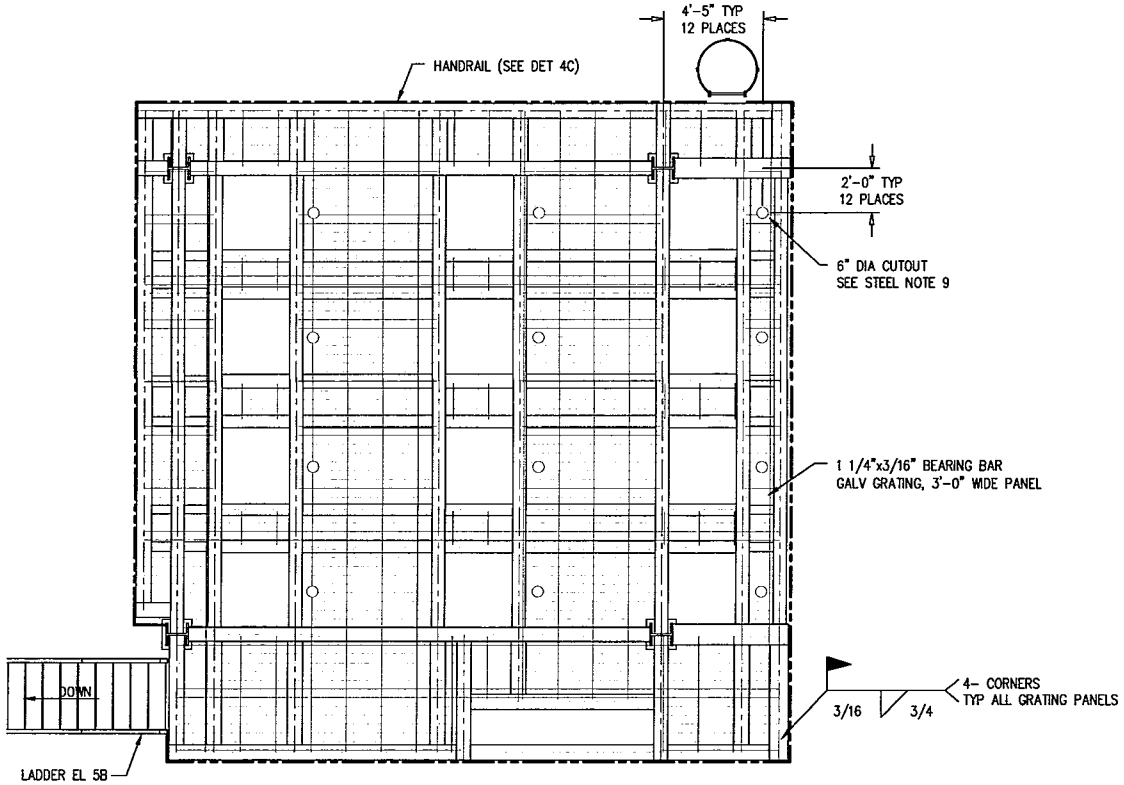

PLAN VIEW 4A

DCLB PLATFORM GRATING & HANDRAILS
16'-6" EL
SCALE: 3/16"=1'-0"

NORTH

DD(X) IPS LBTS, BLDG 77H

DCLB PLATF GRATINGS & HANDRAILS ARRANGEMENT

SIZE	CODE IDENT	DRAWING No.	REV
B	89256	7625154	–
SCALE: AS NOTED		SHEET 4	

2\BUILDING 77H\DD(X) IPS DRAWINGS\7625154 R- D04-08-12.DWG

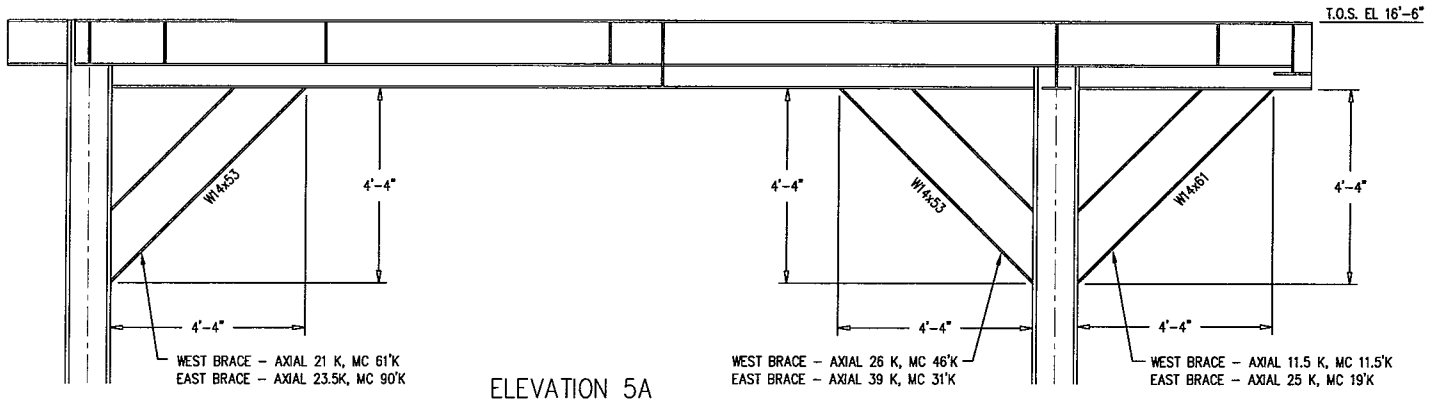

ELEVATION 5A
DCLB PLATFORM
(TYP 2 PLACES)
LOOKING WEST
SCALE: 3/8"=1'-0"

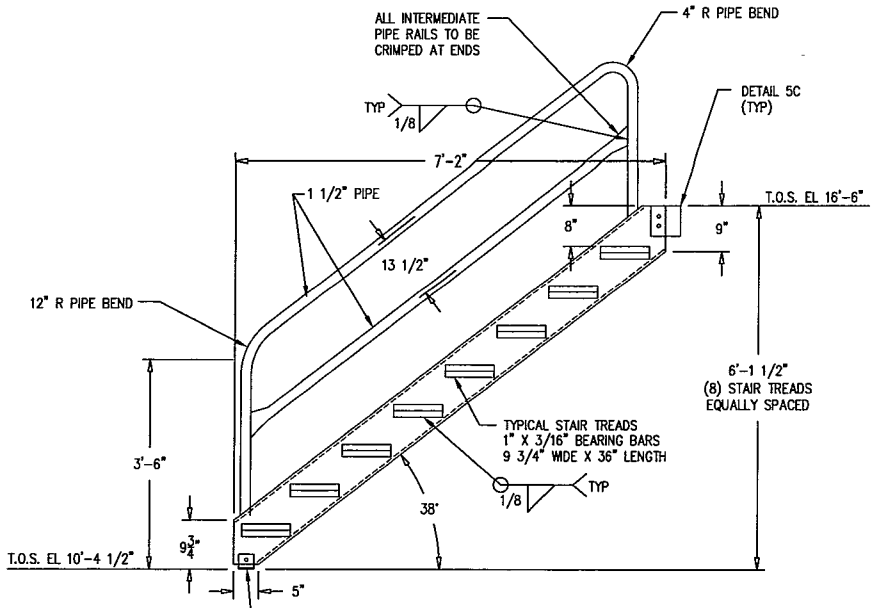

ELEVATION 5B
DC LOADS BANK PLATFORM
STAIR 16'-6" TO 10'-4 1/2" EL
LOOKING WEST
SCALE: 1/2"=1'-0"

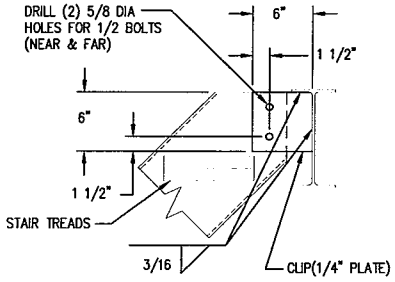

DETAIL 5C
STAIR STRINGER UPPER CLIP
SCALE: 1"=1'-0"

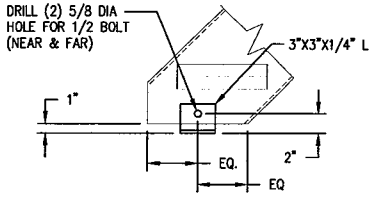

DETAIL 5D
STAIR STRINGER PLATFORM OR FLOOR CLIP
SCALE: 1"=1'-0"

DD(X) IPS LBTS, BLDG 77H
DCLB PLATF
ELEVATIONS & DETAILS

SIZE	CODE IDENT	DRAWING No.	REV
B	89256	7625154	–
SCALE: AS NOTED		SHEET 5	

BUILDING 77H\DD(X) IPS DRAWINGS\7625154 R- D04-08-12.DWG

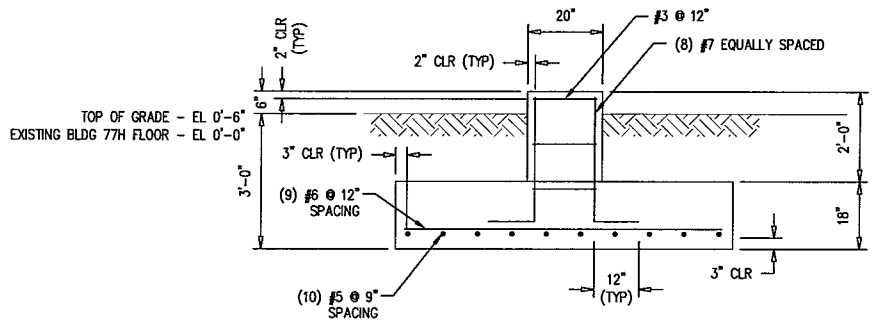

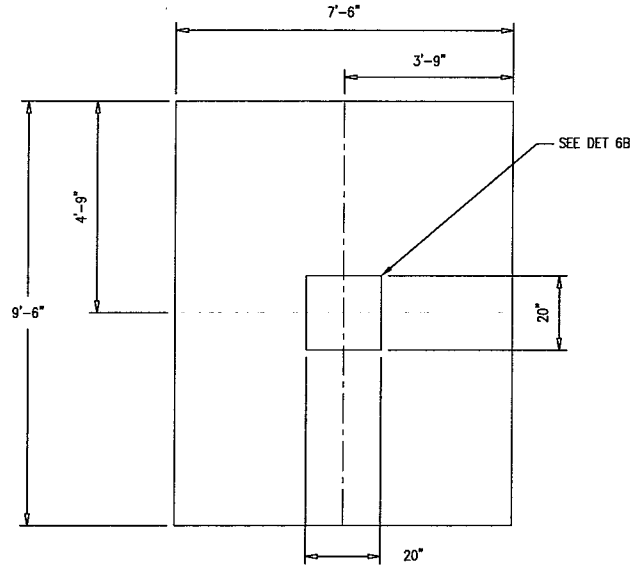

DETAIL 6A
DCLB PLATFORM FOUNDATION
(TYP 4 PLACES)
SCALE: 3/4"=1'-0"

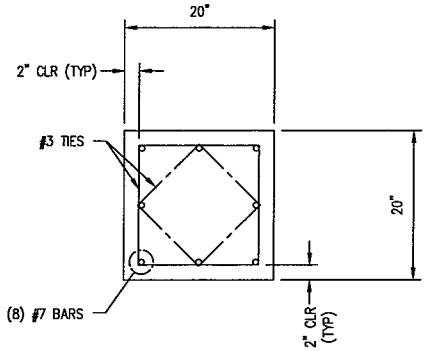

DETAIL 6B
DCLB PLATFORM FOUNDATION PEDESTAL
(TYP 4 PLACES)
SCALE: 3/4"=1'-0"

DD(X) IPS LBTS, BLDG 77H
DCLB PLATF
CONCRETE FOOTINGS ARRANGEMENT

SIZE	CODE IDENT	DRAWING No.	REV
B	89256	7625154	–
SCALE: AS NOTED		SHEET 6	

2\BUILDING 77H\DD(X) IPS DRAWINGS\7625154 R- D04-08-12.DWG